BROADCAST
RECEIVERS
SCHEMATICS

Vintage Radio Identification SKETCH-BOOKS of D. H. MOORE

VOLUME II

R. H. Tucker

The Editorial Group, Ltd...

P.O. BOX 521 • PALO ALTO, CALIFORNIA

PUBLISHING HISTORY

First Edition: © D.H.MOORE, 1954.
2nd Printing: © D.G.YULE, 1985

Second Edition: © D.G.YULE, 1986.

Third Edition: © RAY FOSTER, 1987
2nd Printing: © RAY FOSTER, 1987

All rights reserved. No part of this book text or illustrations - may be reproduced or transmitted in any form or by any means, electronic or mechanical, including photocopying, or recording, without the written permission of the copyright owner. For information, write to the publishers.

Library of Congress Catalogue Card: 87-98347

Acknowledgements

Bits and pieces of these volumes have been published, referenced, reviewed in several media devoted to the hobby of vintage Radio, including a few foreign countries, such as New Zealand, Japan, Canada and England. Such favourable notice for such a labour of love is hereby acknowledged in appreciation.

Thanks must also be offered Stan Lopes who tediously editted the technical authenticity of circuitry to be found in Volumes II through VII. His labours have resulted in an obvious authenticity, we feel, especially for those who delight in tracing out vintage schematics. He even found technical errors in original sources!

Special thanks are due Douglas G. Yule, who originally sponsored this effort as a contribution to the hobby, without whose prompting these Sketch-Books may not have come into existence. Also, thanks are given to Howard W. Granoff, of the OLDE TYME RADIO COMPANY, whose unflagging enthusiasm and publicity has done much to make these Sketch-Books known within the fraternity.

And in as much as fraternalism is the basis for shared enthusiasm, which is what any hobby is, and because of the original and dramatic shift away from the current vintage Radio fare, it follows that the publishers and the author, being human, would appreciate hearing from you, your comments, along with any suggestions you'd care to offer with an eye to producing bigger and better vintage Radio literature in future.

DEDICATION

....to a way of life
that should not have
been forgotten.

The concept and execution of these SKETCH-BOOKS, includ- research, design, layout and sketches are the loving work of D.H.MOORE.

Vol.II: B.C. Receivers

INTRODUCTION..... 1
Reading The Schematics..... 3

ACMEFLEX D-Coil Receiver..... 4
Model S-2, 1925..... 6
D-Coil Notes..... 7
ACME Four Reflex..... 9
AC-3 Reflex..... 10
AC-4 Reflex..... 10
AERODYNE TRF, 1926..... 11
AERO Regenerative TRF..... 11
Seven..... 12
ALDEN-SOMERBRIDGE Receiver..... 14
ALDEN Localised Receiver..... 16
ALLIED/CISIN Find-All-4..... 19
Amplion No. 1, 1929..... 24
Amplion No. 2, 1930..... 22
AM-RAD AC-5..... 25
AM-RAD Super-Six..... 26
ARBORPHONE Notation..... 27
ARGUS Model B-125, 1925..... 28
Armstrong Shielded Super..... 29
Autodyne Triplex 2-Band..... 32

Baby 1-Tube Portable..... 33
Benson 3X-Superflex, 1924..... 35
BERNARD 2-Tube Tuner..... 36
Audio-Basin..... 37
BERNSLEY Portable, 1926..... 38
BEST Tuned RF Amplifier, 1926.. 39
45 KC Evolution..... 42
8-Tube Super-Het, 1925.... 44
BESTON V-60, 1924..... 45
BOONTON RF Amplifier & Rcvr.... 46
BOSCH Amborola Model 16..... 47
Model 5, 1927..... 49
Model 28/29..... 50
Bryant Magister Super-Het..... 52
Brunotrol/Simpletrol TRF..... 54
BRUNO "77" Wonder Set..... 55
B-S-T 6-Tube TRF, 1926..... 56

Callies Super-Het, 1926..... 57
CAMFIELD Super-9..... 59
Capacity-Controlled Regen..... 61

CELCO D-Coil Super-Het..... 62
CISIN Double Shielded Portable.. 64
Clark's Super-Octette, 1925..... 66
COCADAY 4-Circuit Regenerative.. 69
COCKADAY 8-Tube Super-Reflex.... 71
Connecticut Tele. 1-Tube Tuner.. 174
COLUMBIA S.G. 8..... 73
CROSLEY XJ Receiver, 1925..... 75

DAVEN AC-5 Receiver, 1928..... 76
DAVEN Bass-Note Receiver, 1926.. 77
DAY-FAN 5-Tube TRF, 1923..... 81
DeFOREST Commercial Killer..... 83
Diamond-Of-The-Air Series..... 85

Electron Model VIII, 1926..... 91
Electronic Labs Multi-Wave..... 90
ELLIS D-Coil Five..... 92
ERLA Monodic Notation..... 93
Pathfinder, 1924..... 95
Pathfinder, 1925..... 94,95
Superflex 5..... 96
Everyman Four..... 98

FADA Special Five..... 100
Model 170-A, 1925..... 101
FEDERAL Type 59 Receiver..... 102
FEDERAL Orthosonic, 1926..... 103
FERGUSON 6-Tube TRF..... 104
FITCH Tropodyne, 1925..... 105
FLEWELLING Super-Booster, 1925.. 108
Single Circuit Tuner. 110
Super-Regenerative... 111
FREED-EISEMANN Orphan, 1925..... 112
Model FE-15..... 113
Model 48.....:... 114

Electrifying FRESHMAN's Master.. 117

GENERAL RADIO TRF, 1926..... 121
30 KC Super-Het... 123
GREBE Synchrophase MU-1..... 124
GRIMES Inverse Duplex, 1923..... 125
1924..... 126
1925..... 127
1926..... 135
1927..... 143
Variant.. 145
GRIMES DC New Yorker..... 130

GRIMES Baby Grand, 1925..... 132
1926..... 133
GRIMES Octo-Matic..... 128

HAGERMAN Model 210 AC-6..... 146
HALLDORSON S.G. Model 56..... 148
HENNINGER S.G. TRF, 1926..... 149
H.B. Compact Receiver..... 150
HARKNESS Counterphase Variants.. 152
Counterphase, 1924..... 153
1925..... 154
Heraldyne TRF, 1929..... 163
HAYNES DX Receiver, 1923..... 158
DX Multi-Valve Receiver.. 159
HARKNESS S.G. DeLuxe Receiver... 156
HAYDEN DX-4, 1927..... 160
AC-4, 1929..... 161
Midget Three, 1929..... 162

KARAS AC Equamatic..... 164
Knickerbocker Four..... 167
KENNEDY Model 20-B, AC, 1927.... 168

LINCOLN Super-9..... 169
LODGE "N" Receiver..... 170
LOFTIN-WHITE Principle..... 171
L-W Constant Cpld. Receiver, ... 172
LEUTZ Super-Pliodyne 9, 1925.... 175
Silver Ghost Note..... 177
Silver Ghost Debutante.... 179
Seven Seas..... 180
Trans-Oceanic..... 178
LYNCH Deck, 1928..... 181
Application No. 1..... 182
Application No. 2..... 190
Application No. 3..... 183
With AERO Coils..... 186
National 5..... 185
Universal Receiver, 1926.. 187

MADISON-MOORE Super-Het, 1926... 191
One-Spot Receiver..... 195
Internat'l. One-Spot.... 197
MAGNAFORMER 8-9 Receiver..... 199
Variant..... 203
MARCODYNE No. 1, 1926..... 204
No. 2, 1926..... 205
No. 3, 1926..... 207
Megadyne BC Receiver..... 210

MELO-HEALD "Eleven"..... 212
MERCURY Super-Het (Canada)..... 214
Midget TRF, AC-DC..... 217
MOHAWK Navalo Five, 1926..... 218
Morris Simplicity Receiver..... 220
MU-RAD Model MA-15, 1923..... 222
Super Six, 1926..... 224
Music Master/Ware Reflex..... 225

Neutrodyne, Reflexed..... 227
NORDEN-HAUCK Super-DX Rcvr..... 229

PORTABLE CONFIGURATIONS..... 234
Powertone..... 235
Pressley-Sangamo..... 238
RCA Pocket..... 310
Scott..... 279
Silver-Marshall..... 289
PIERCE-AIRO Six..... 232
POWERTONE BC Receiver, 1926.... 236

RADIOLA 16..... 243
26..... 244
64..... 252
Super-Het..... 249
RCA Catacombs..... 247
AP-777-6 Amplifier..... 251
RAULAND Model R TRF..... 257
IF Amplifier, 1924..... 258
R-2 Neutrodyne..... 258
30 KC Super-Het..... 255
RAVEN Super-Het Kit Notation... 259
Regenerative Pre-Selectors..... 260
REMLER Infradyne..... 261
R.W. AC-300 Receiver..... 262

SAMSON 3-Tube TRF, 1924..... 264
Super-Het Kit Panel..... 226
T-C Receiver..... 265
SARGENT-RAYMENT Seven..... 271
Six Note..... 226
Schnell Tuner, 1926..... 274
SCOTT An Unknown Orphan..... 279
Worlds' Record Evolution 280
" " Super.... 281
" " Eight.... 283
" " Nine..... 284
" " Ten..... 285

SCOTT AC Symphony S.G. Rcvr.... 288
Shordron Trap-Circuit Rcvr..... 290
SILVER Long-Wave Receiver..... 292
SICKLES 4-Tube TRF..... 291
SILVER-COCKADAY TRF..... 296
SILVER-MARSHALL Lab Super..... 300
440 Amplifier (IF)..... 303
Portable, 1925..... 289
S.G. Super-Het..... 308
Shielded Six w/ 22's.... 304
" AC..... 305
" Battery.... 306
" No. 630.... 307
SLEEPER Monotrol Notations..... 309
SPLITDORFF Abbey/171..... 311
Standardyne Multivalve Rcvr.... 312
Srandard Neutrodyne Circuits... 313
STERLING Miniature Receiver.... 316
STEWART-WARBER R-100-A/-B/-C... 318
STROMBERG-CARLSON 601-A/-B..... 320

THOMPSON Minuet R-81..... 326
Thermiodyne TF-5..... 325
THORDARSON QSA-5..... 330
TRF Using Hascom Unit..... 323
TRF Using Toroidal Coils..... 332

U.H.F. (G.B.) Receiver, 1937... 333
Unidyne/Solodyne (G.B.)..... 336

WADE-THORDARSON TRF, 1926..... 327
WALBERT Isofarad TRF..... 339
WALKER Multi-Unit..... 342

ZENITH Super, 1926..... 347

* * *
* *
*

How to make

A PORTABLE RECEIVER

INTRODUCTION

The basis of authority for any ongoing calling, profession, discipline or hobby, turns exclusively on its accumulated historical and validated literature. While there was a plethora of literature available in the early days of Radio, ranging from magazines, periodicals, books, instructions, sales catalogues, most have disappeared. Very few, if any, vintage Radio buffs have extensive libraries of such literature, including the so-called old radio museums.

We have the massive compilations of Rider and National, RCA Service Manuals, Gernsback's Official Schematics, Sams portfolios, Beitmann. All are patently useful, but few have complete sets of any of the accepted standard references. Also, if you look sharply at these accepted authorities, you will find that they are strangely incomplete, schematics lacking component values, for example, and, of course, an almost total ignoring of the myriad of "orphans" which gave the game its colour and flair in the early days, as well as tacitly implying the sociological phenomena inherent in the infant art.

The current fad seems to be to reprint as many of the early catalogues as can be found, which is also useful as adjuncts to a hobby, but few offer design, constructional, historical data which would be advantageous to those of us who prefer to construct the early circuits and with original parts. We are also witnessing a rash of so-called "price-guides", obviously compiled by people who simply haven't done their home work, and offer misleading information, as well as revealing deleterious presumptions. While the more adept among us can easily trace out circuit and component, when they are intact, or even design a probable circuitry from bits and pieces we may have come by, the question is: why should it be necessary? A basis literature would obviate the need, and that is the premise upon which these Sketch-Books was based.

Then there were those sets available only in kits, which in themselves, offered probably the most interesting circuits, or concepts, and one looks in vain for references to them in the so-called standards. Alignment and operating procedures, particularly for the early AC models are totally absent from early marques, and there is never a reference to the evolution of certain popular marques which truly advanced the game.

It was a slow awareness of this deficiency that caused me to start compiling the data to be found in these Sketch-Books. As has been inferred, many an "orphan" circuit reflected minor, and major advanees in the state-of-the-art, some innovations which were immediately glommed onto by the corporate manufacturers sans credit to the originators.

Like the early days of "hot-rodding" there in Southern California, when we came up with many an innovation to secure better performance from "Detroit Iron" - innovations which were subsequently taken up by Detroit and are now standard on modern motor-cars; and, of course hot-rodders were never given credit.

The schematics you will find throughout these Sketch-Books, all nine volumes, you are not likely to find in Riders or any other so-called standard "bible".You will also find details of the evolution for certain design concepts, principles, designs. The Ultradyne, Browning-Drake, Loftin-White, Infradyne would be cases in point.

Another obvious advantage of these Sketch-Books is that the sincere vintage Radio buff can actually construct original circuits and rebuild the sets whose schematics appear herein, ranging all the way in fact from original baseboard layout to coil-winding data. Such data may not be of interest to the so-called "collector" who professes a burning interest in only pristine sets, placing them on a shelf, and watching a fine layer of dust accumulate on them. This is unfortunate, in as much such people are denying themselves the full enjoyment of the hobby.

The more one learns of one's hobby, the greater is pleasure derived from that hobby; and when one is moved to construct some of the early circuits, just to see what they will do, there is a sense of satisfaction, a genuine sense of accomplishment. This naturally makes the hobby that much more personally relateable.

In this volume and in Volume II-B you will find most of the marques, particularly the "orphans", ignored by such as Riders, for BC receivers. Other volumes offer similar data on most every aspect of the early set-builder's interests and concerns: see the back cover. You can also find in these Sketch-Books something else not available elsewhere, a Bibliography of practically every circuit that was ever offered thru' Radio media from 1910 through the mid-Thirties. If you know where something can be found, you've won half the battle of searching. The Bibliography is not limited to "orphans" or marques in these Sketch-Books.

Because of the then-popular interest in certain marques, or an impressive number of variants of a given circuit, I found that pulling such data into seperate Monographs was the most feasible way to go. These Monographs are also listed on the back cover. While most of those marques listed are well-known, very few people seem to know just how or why so many variants were generated. These data are, in themselves, interesting, on the one hand; and also tend to dramatise the spirit and the sense of adventure that must have afflicted our early set-builders. You can experience that same spirit by having a go at constructing some of the "orphan" circuits detailed in the following pages, and that, one may say, is really what a hobby is all about.

* * *

WHEN READING THE SCHEMATICS...

1. All drawings are free-hand sketches: do not attempt to scale any drawing - panels, for instance. Where a full-scale template is shown, it may be scaled.

2. When no tube designation is shown, always assume 01A.

3. Where power chokes are not valued, always assume 30 H.

4. Undesignated RFCs will be 85 mH.

5. Abbreviations commonly used on schematics, other than the conventional ones you are already familiar with:

G/L = grid-leak	Ø = diameter
C.T. = centre tap	N/O = normally open
T = turns (of wire)	N/C = normally closed
N/C = not connected	Enam. = enamelled wire
DCC = double cotton covered (of wire)	
SCC = single cotton covered	
DSC = double silk covered	N/C = neutralizing condenser
SSC = single silk covered	
Variable = variable condenser	

6. If there are specific data you feel you need clarified for a given marque, write to the publishers, gratis: or to Olde Tyme Radio Co.

7. Where multiple media references occur for a given marque, it means each contained an article on that marque, either as a continuing article or seperate articles dealing with the same marque.

8. The following marques have been published as seperate monographs and are available from the publishers. Others are in preparation:

Ultradyne	Silver-Marshall
Victoreen	Bremer-Tully
Remler/Best	Pilot
Roberts	Doerle

* * *
* *
*

"ACMEFLEX" 5-TUBE "D"-COIL RCVR., 1926
(Sht. 1)

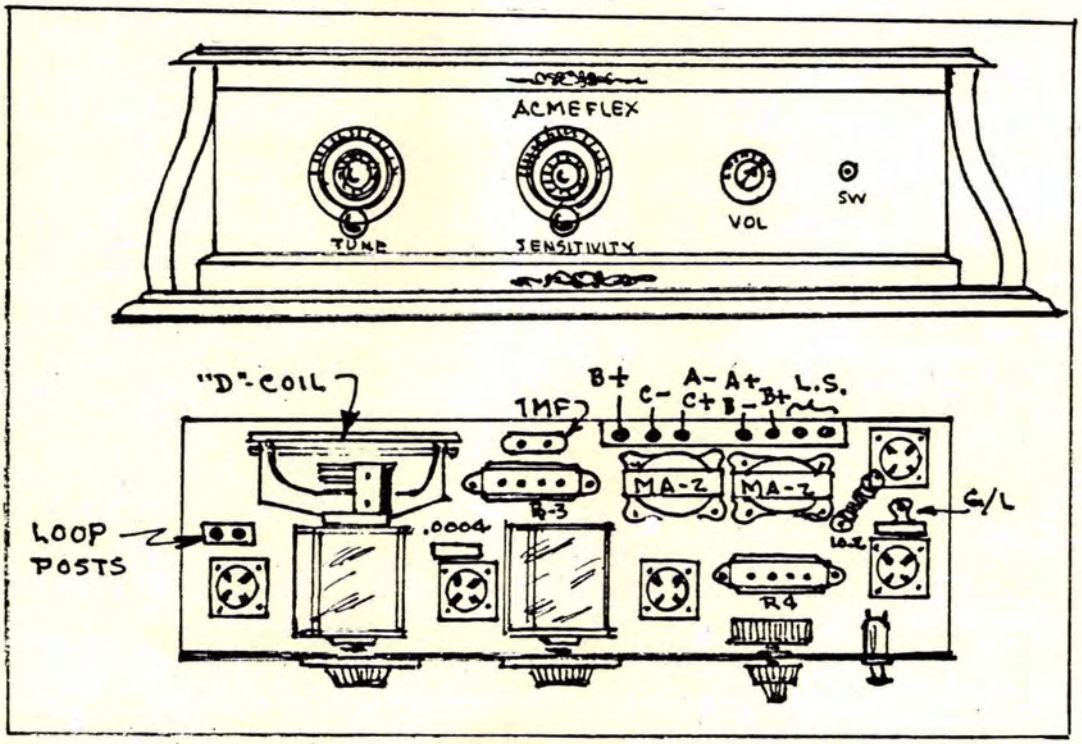

PARTS LIST

ACME MA-2 AF Transformers. (2)
ACME R-3 RF Transformer.
ACME R-4 RF Transformer.
ACME "D"-Coil Assembly; 500 MMF Variable.
ACME 500 MMF Variable.
Dual Rheostat 6-ohms/2K-ohms.
10-ohm Resistor.
500K-ohms Grid-Leak.
.00025 MF Condenser.
.002 MF Condenser.
.0004 MF Condenser.
1 MF By-Pass Condenser.
Panel = 7" x 24": Sub-Panel = 7" x 23".
9 Binding Posts.
3" Vernier Dials.
20 Pcs. Tinned #14 Buss-Bar, 24" Long.

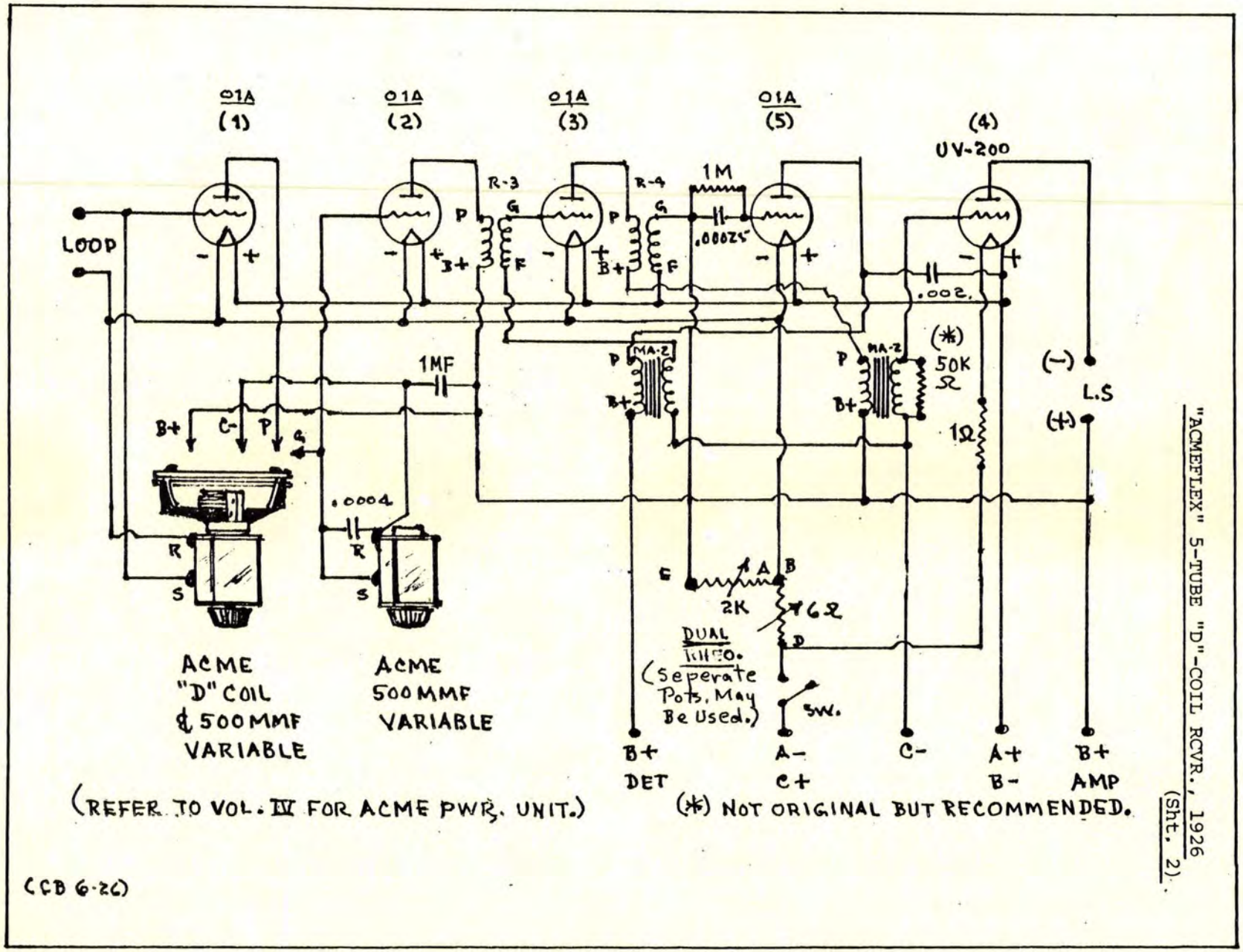

"ACMEFLEX" 5-TUBE "D"-COIL RCVR., 1926 (Sht. 2).

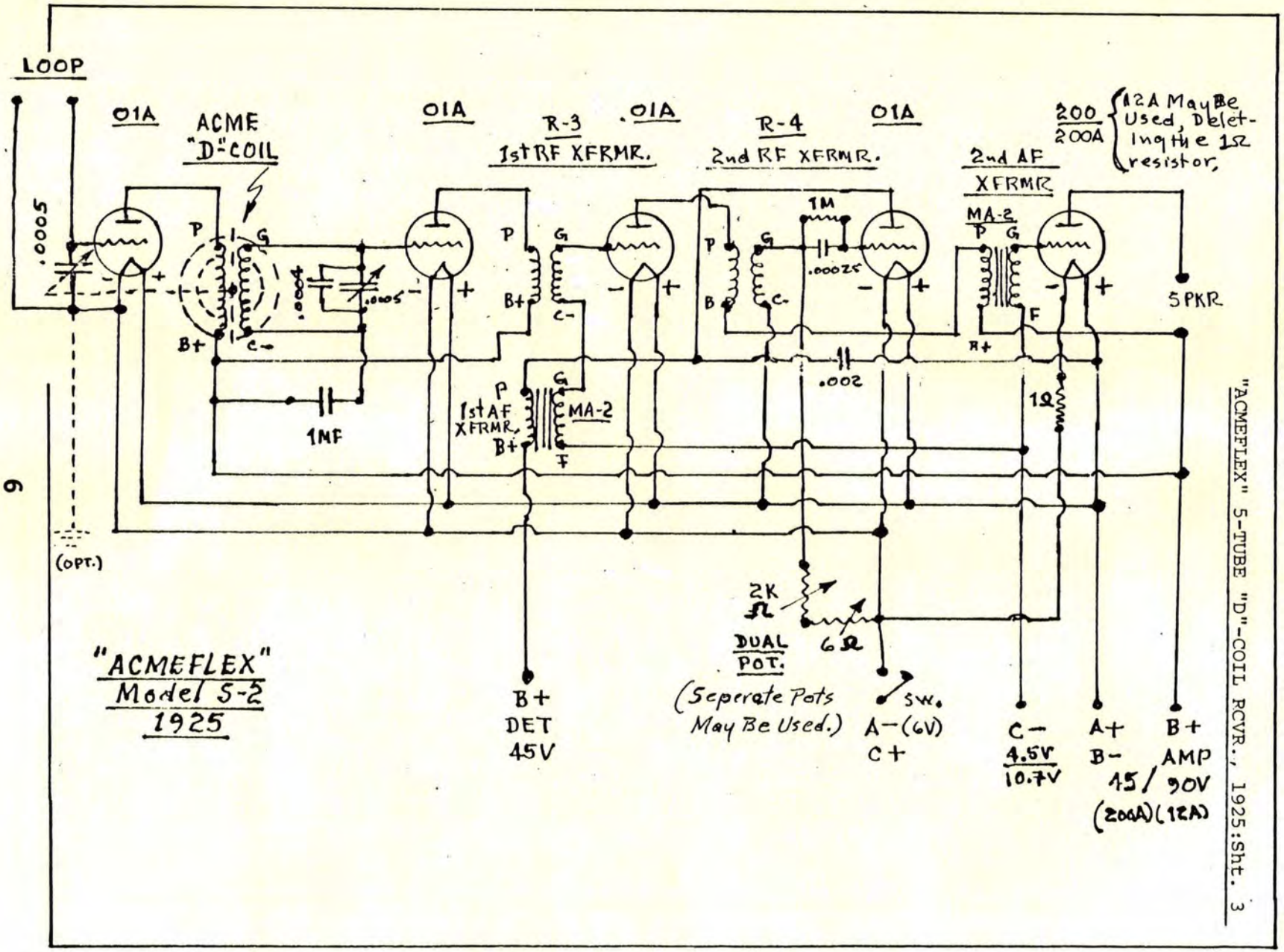
LOOP
01A
ACME
"D"-COIL
01A
R-3
1st RF XFRMR.
.01A
R-4
2nd RF XFRMR.
01A
2nd AF
XFRMR
MA-2
200
200A
12A May Be Used, Deleting the 1Ω resistor.
.0005
.0004
.0005
1MF
1st AF
XFRMR.
MA-2
1M
.00025
.002
1Ω
5PKR
(OPT.)
2K
DUAL
POT.
6Ω
(Seperate Pots May Be Used.)
SW.
B+
DET
45V
A−(6V)
C+
C−
4.5V
10.7V
A+
B−
45/90V
(200A)(12A)
B+
AMP
"ACMEFLEX"
Model 5-2
1925
"ACMEFLEX" 5-TUBE "D"-COIL RCVR., 1925:Sht. 3

ACMEFLEX D-COIL NOTES

While reflex ciruits, per se, have never held much interest for me, when I came by the ACME "D"-Coil I was fascinated by its exotic configuration. It was incredible, considering the period in which it was produced. So I set about acquiring a box-full of originally specified ACME parts, in order to construct the "ACMEFLEX" circuit which took about a year of casual searching. The results of my searching may be found in several volumes of these Sketch-Books - i.e., power supplies, amplifiers, other receivers, etc.

The circuit was assembled easily enough, but instead of the usual evening required to construct a circuit, this circuit required a full week before all of the "bugs" could be removed. Today, it gives me quite acceptable reception, within the limitations of the loop. However, if you have an inoperative "ACMEFLEX" gathering dust, or you feel you'd like to construct one, my experiences may be of passing interest.

1. The use of specified ACME parts is mandatory, with a carefully considered exception here and there, as will be noted.

2. ACME M2 AF xfrmrs. were originally called for, and they are extremely well-made units. However, if you have a pair of ACME A2 xfrmrs. at hand, they will function satisfactorily, with less output.

3. The "D"-Coil and its companion Variable have integrated vernier controls - most essential. They are of the push-pull variety, and the large rubber contact will undoubtedly have hardened over the years. They can be rendered resilient again by soaking over night (after removal from the variables) in any good rubber-revilatlizer. Tuning of both of the variables is razor-sharp, and the verniers are really necessary.

4. The set will go into oscillation with the slightest jar, the passing of a foreign motor-car outside, the rumble of a train, or turning on electric-light switches. When this happens, back off the SENSITIVITY control, then gradually creep back to the prior setting.

5. DO NOT GROUND THIS SET!

6. A 2-point loop is specified. If you have a 3-point loop, connect the inner and outer leads and leave the center lead unattached.

7. While the specified ACME R-3 and R-4 RF xfrmrs, work best, I found that "DURATRAN" and "All-American" RF xfrmrs. (of the same period) will give satisfactory results.

8. The ANT lead must go direct to the "G" post on the first RF tube, then to the "D"-Coil stator. Reversing these creates howl.

ACMEFLEX D-COIL NOTES (Cont.)

9. Like all early reflex circuits, this circuit will squeal uncomfortably when the received signal is centered. To control this, always start tuning with the VOLUME control at its lowest point. When a noise is heard, rock the SENSITIVITY control. If it is a legitimate signal, gradually turn up the volume. This may also require rocking the SENSITIVITY control some more.

10. While the schematic diagram calls for a speaker, this set operates most comfortably on phones, of the high impedance type.

11. While this receiver is quite stable, it is not very sensitive beyond pulling in powerful local stations. This may have been quite enough for our early set-builders, as any sort of reception would have been construed as a successful receiver, but I admit to being a bit disappointed at its "DX" ability. The farthest station received was from Sacaramento, a distance of approximately 80 miles.

12. In terms of tone - i.e., fidelity of sound - this set is impressive. Substituting a 12 or 12A for the 01A in the output stage will enhance the volume, provided you use 135 volts instead of 90 for the plate.

13. The knobs of both the variables and the vernier control are of the screw-on type, and unless you secure them tightly when first attaching them, they have a habit of backing themselves off in a sudden twist, or if the vernier was not fully disengaged.

14. A wire antenna may be used, with a .00015 mfd condenser in the wire before attaching to the variable, and running the stator lead to either A- or A+; you'll have to try both, but a loop is best.

15. All 3-point loops were not the same, and you might want to try the outer and center leads for best reception.

16. If you use a B-Eliminator, check the polarity of the AC line very carefully; otherwise you'll have a large hum at all settings.

17. A strong local station will come in at several points on the dial, and cannot be obviated by rotating the loop or installing one of the wave-traps of the period. Shorten your ANT or loop.

* * *
* *
*

ACME FOUR REFLEX, 1926

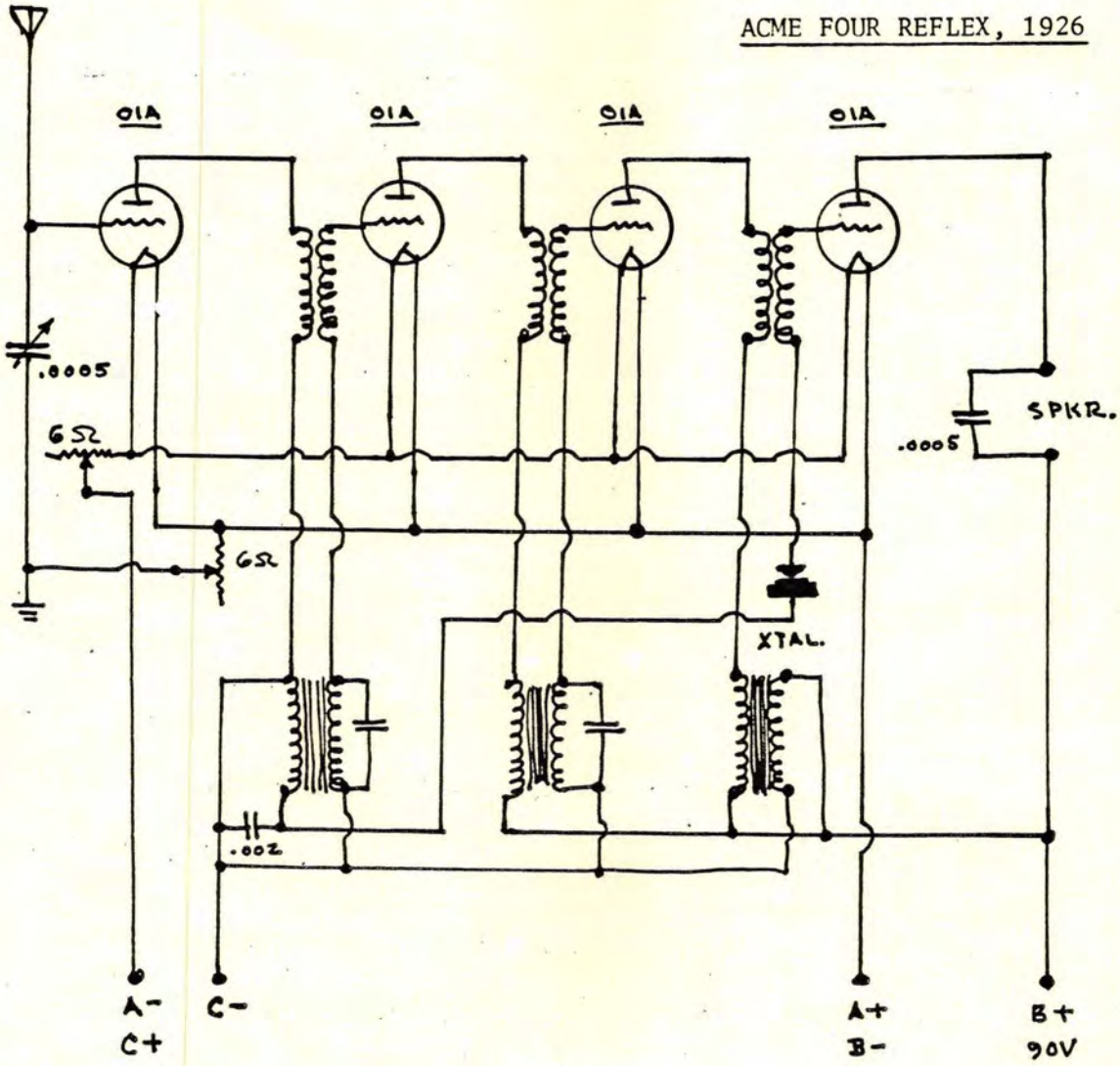

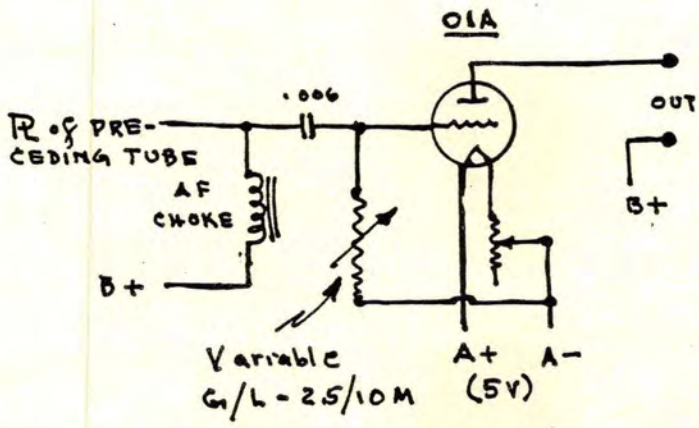

AF CHOKE MAY BE 1/2 OF ANY SHORTED AF XFMR.

(AH-II-26)

VARIANT

ACME AC-3, 1929

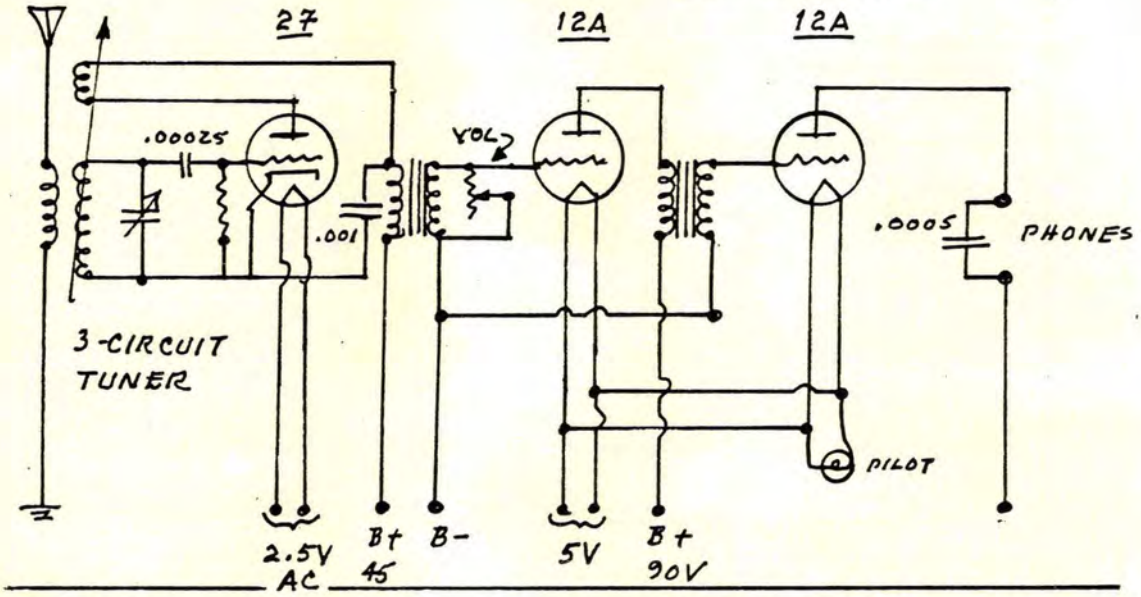

ACME AC-4, 1927 VERSION

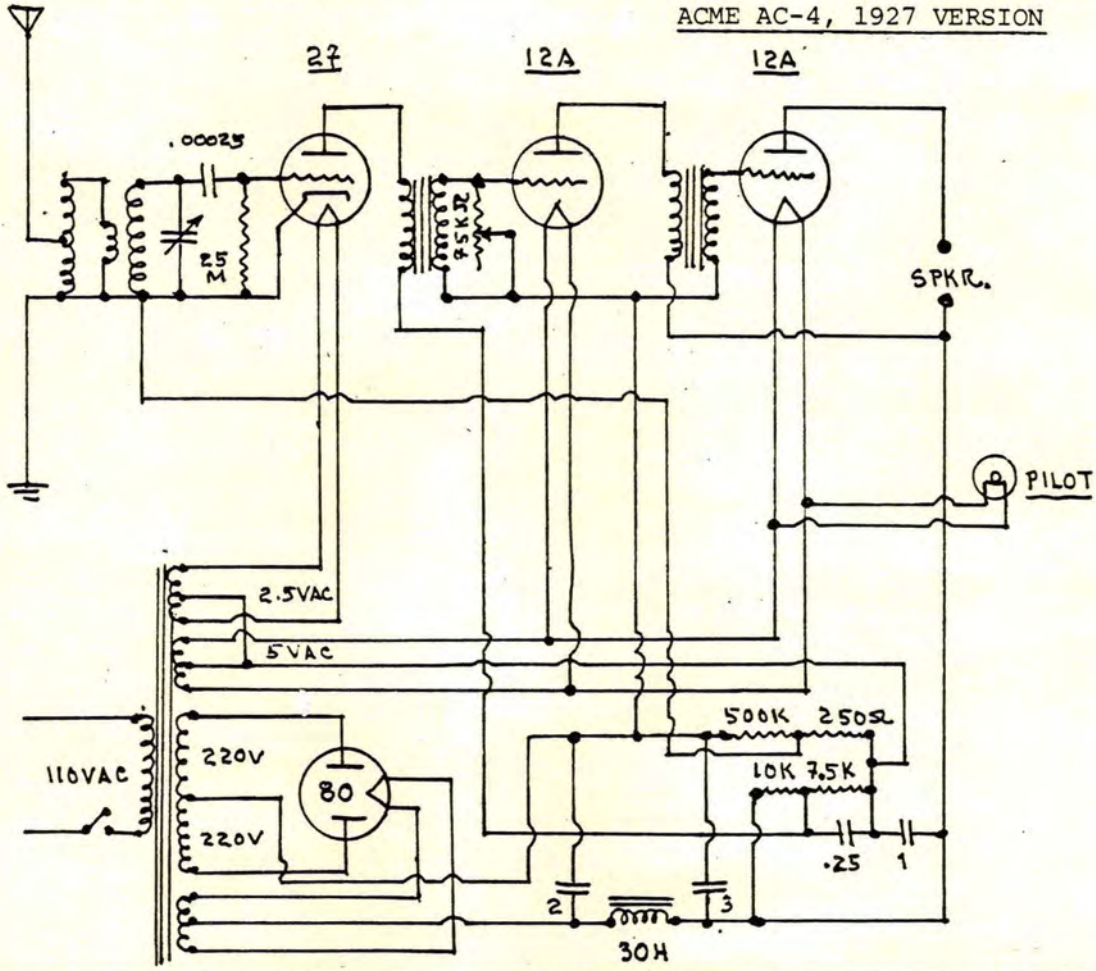

AERO REGENERATIVE T.R.F. RCVR., 1926

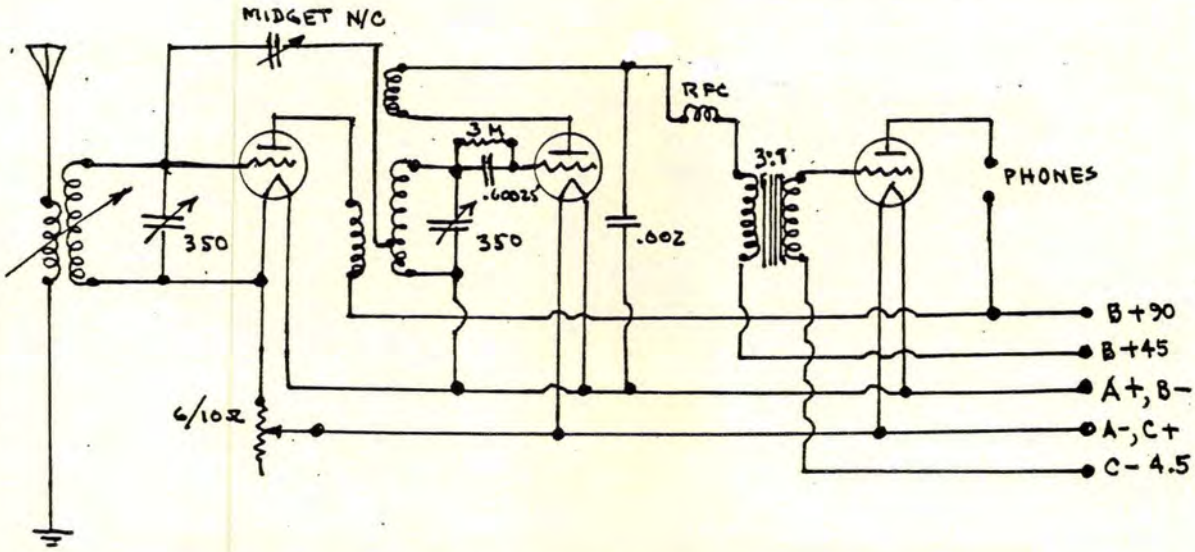

AERO-DYNE T.R.F., 1926

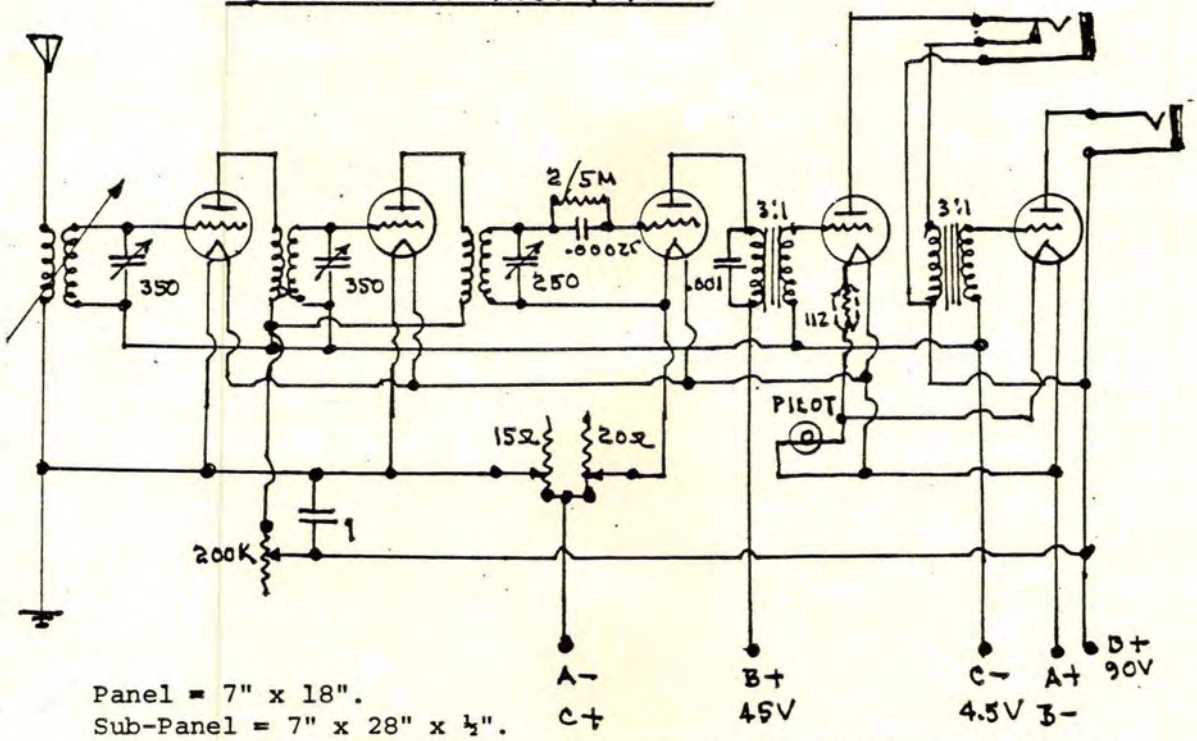

Panel = 7" x 18".
Sub-Panel = 7" x 28" x ½".
(3) 4" Dials.
(3) Sub-panel Brackets.

NOTE: Set will only oscillate when all dials are in resonance.

AERO SEVEN TRF, 1927; Sht. 1

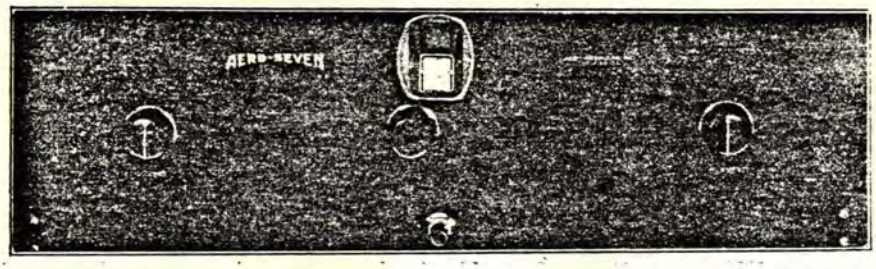

FRONT PANEL

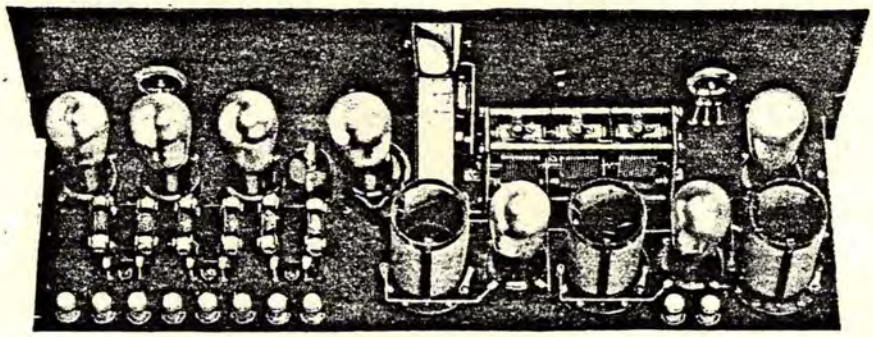

REAR VIEW

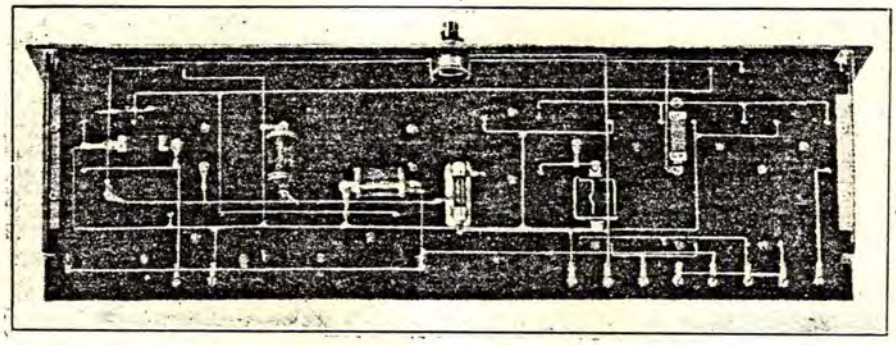

BOTTOM VIEW

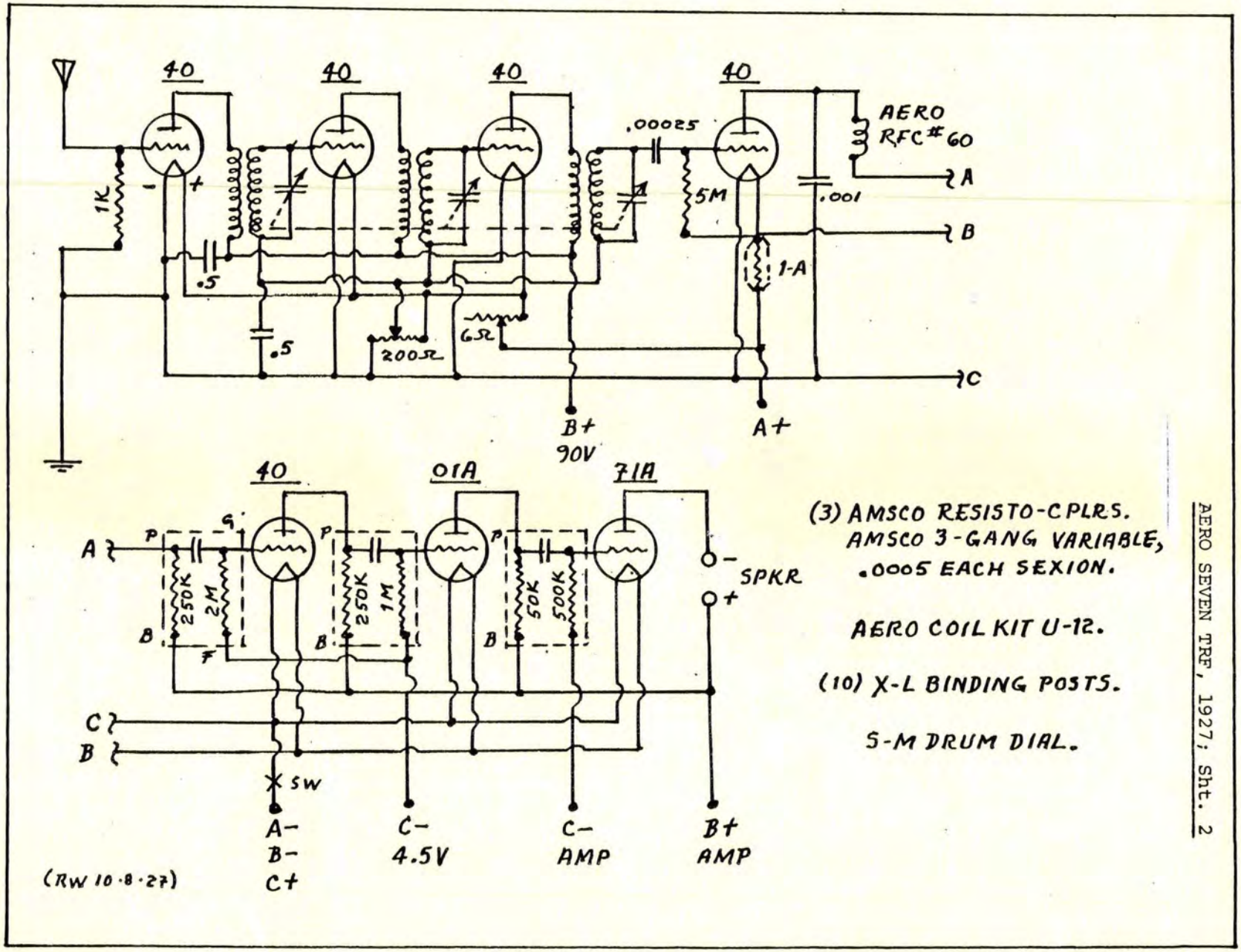

AERO SEVEN TRF, 1927; Sht. 2

ALDEN-SOMERBRIDGE BALANCED RCVR., 1926
(Sht. 1)

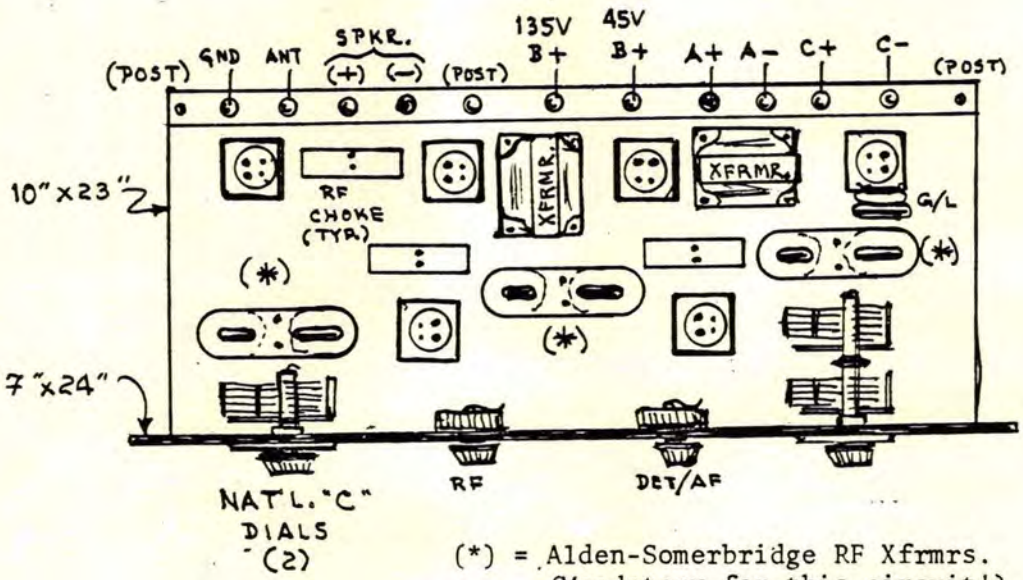

(*) = Alden-Somerbridge RF Xfrmrs.
(Mandatory for this circuit!)

Dials must be rotated together; then rock LH dial on a signal; trim with RH dial.

This circuit was designated an Inductance Balanced Bridge circuit, and was designed by a Dr. Somersalo in 1926. It was the only circuit published in Radio World that was bereft of all component values, which was something of a surprise. While the layout is conventional enough, the values can be easily assumed from similar circuitry. What set this circuit apart were the A-S RF transformers, or coils, and the so-called balancers, which are better designated as RF chokes (iron-core). It is strongly recommended that you do NOT attempt to construct this circuit unless you do have the A-S coils and chokes. Dr. George A. Someralo is alleged to have experimented for six years to develop his bridge-balancing circuit, and if you do have the A-S units, it is worth putting together. Its sensitivity and selectivity was better than most for the times, and worked best through a short antenna.

The schematic over-leaf is straight-forward and should offer no problems to the experienced set-builder. The circuit shows xfrmr.-coupled AF output, but another version stopt at the DET after four tubes, and utilised a Lynch Lamp Socket Amplifier, shown in Vol. IV. My own experience, however, suggests that xfrmr.-cpld. audio is more convenient.

(RW 10-30/11-6-26)

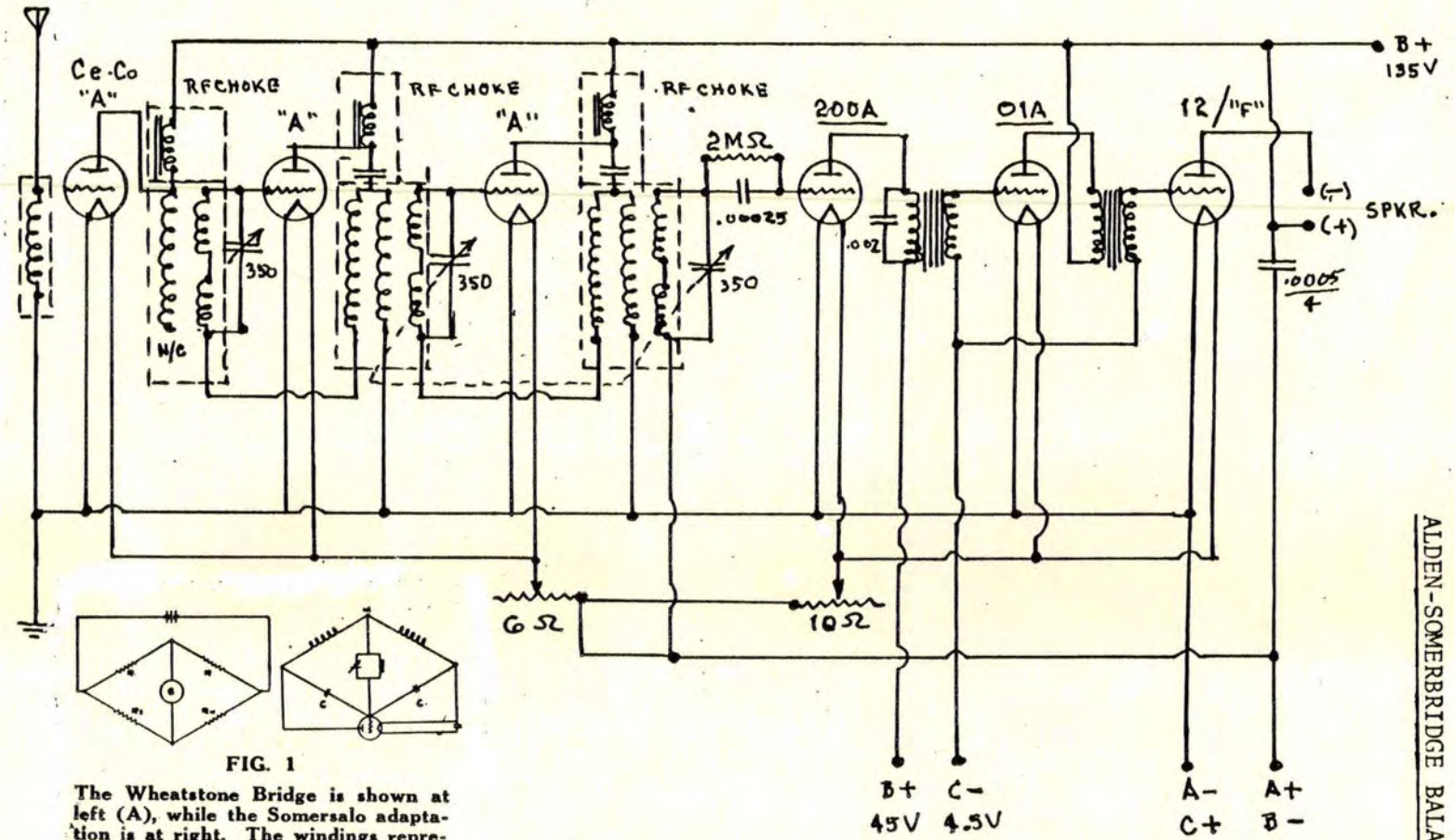

FIG. 1

The Wheatstone Bridge is shown at left (A), while the Somersalo adaptation is at right. The windings represent the plate coil. For A the formula is

$$\frac{R1}{R} = \frac{R2}{Rx} \quad \text{or } Rx = \left(\frac{R2}{R1}\right) R$$

while for B, the Somersalo Bridge, the formula is

$$\frac{C}{C1} \quad \frac{(L + M)}{\left(\frac{L1 + M}{L + M}\right)} = C1 \quad \frac{(L1 + M)}{\frac{N1}{N}} \quad \text{APPR.}$$

ALDEN-SOMERBRIDGE BALANCED RCVR., 1926 (Sht. 2)

ALDEN (Na-Ald) LOCALIZED CONTROL RCVR.

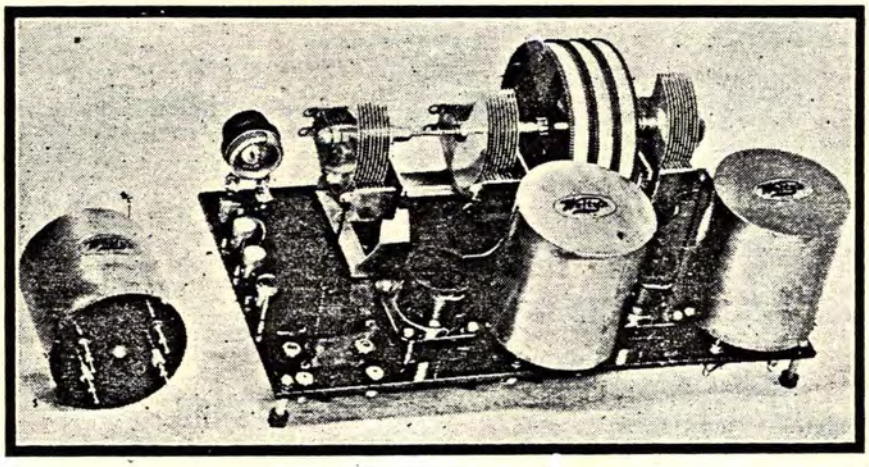

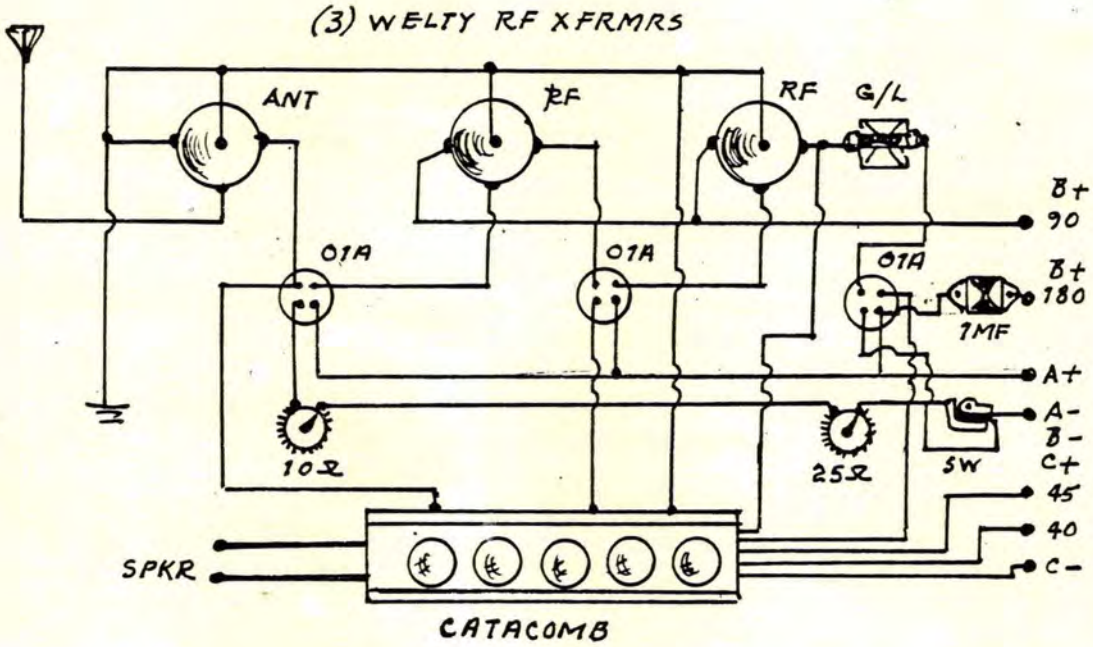

1926 Circuit Shown; See Sht. 3 for 1927 Circuit.

ALDEN (Na-Ald) LOCALIZED CONTROL RCVR.
1926 Version. Sht. 2

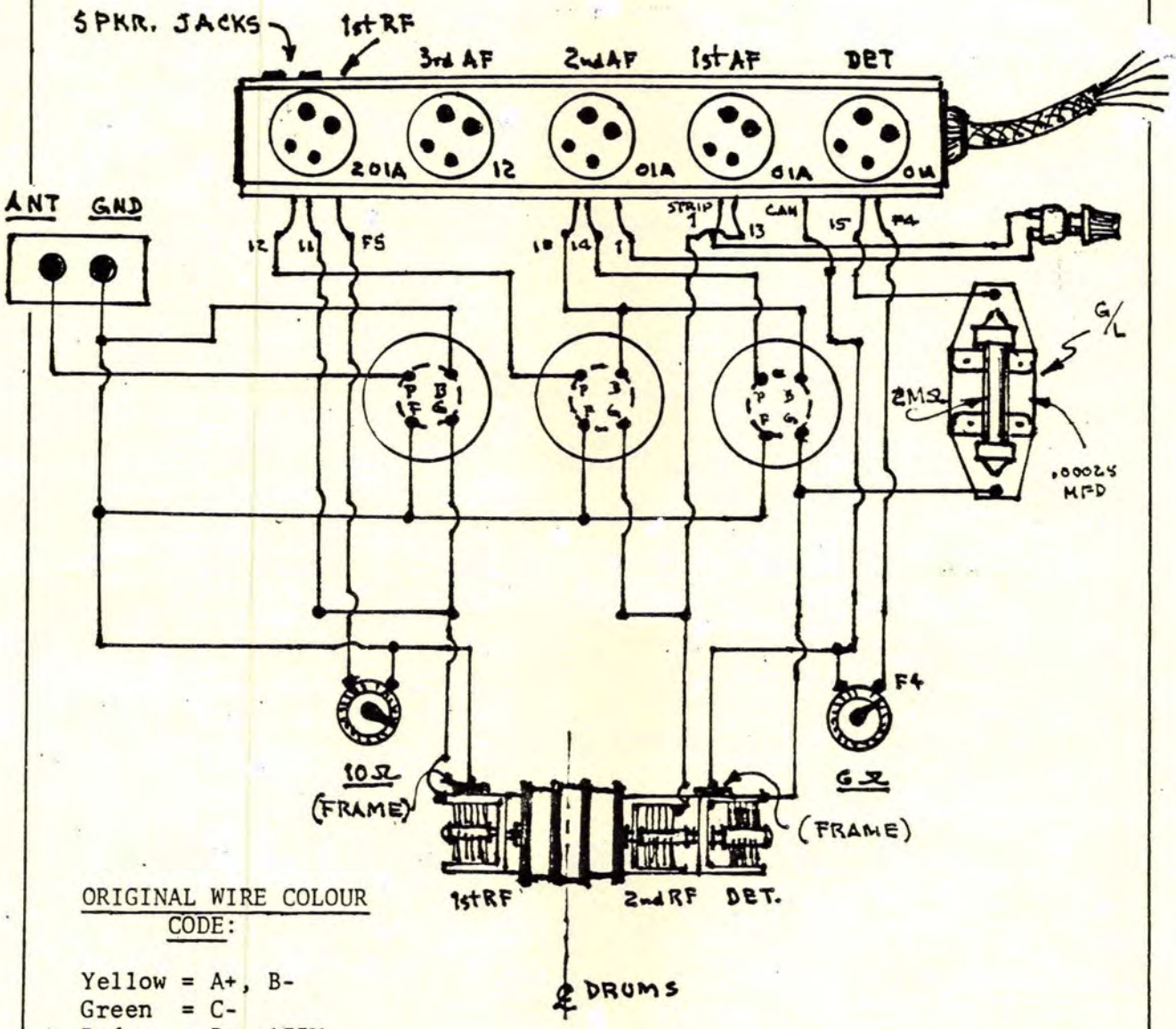

ORIGINAL WIRE COLOUR CODE:

Yellow = A+, B-
Green = C-
Red = B+, 135V
Purple = B+ 90V
Yel/Blk = A-, C+
Red/Blk = B+ 45V

Terminal Strip = 2½" x .75" x .192".
#12 Gauge Copper Wire.

(3) Welty RF Transformers
(3) 375 MMF Unganged Variables.
Panel = 7" x 14" x 3/16".
Baseboard = 11" x 13" x ½".
(2) Binding Posts.

See Sheet 3 for RF transformers-to-catacomb connexions, together with variables & pots.

NA-ALD LOCALISED CONTROL: Sht. 3

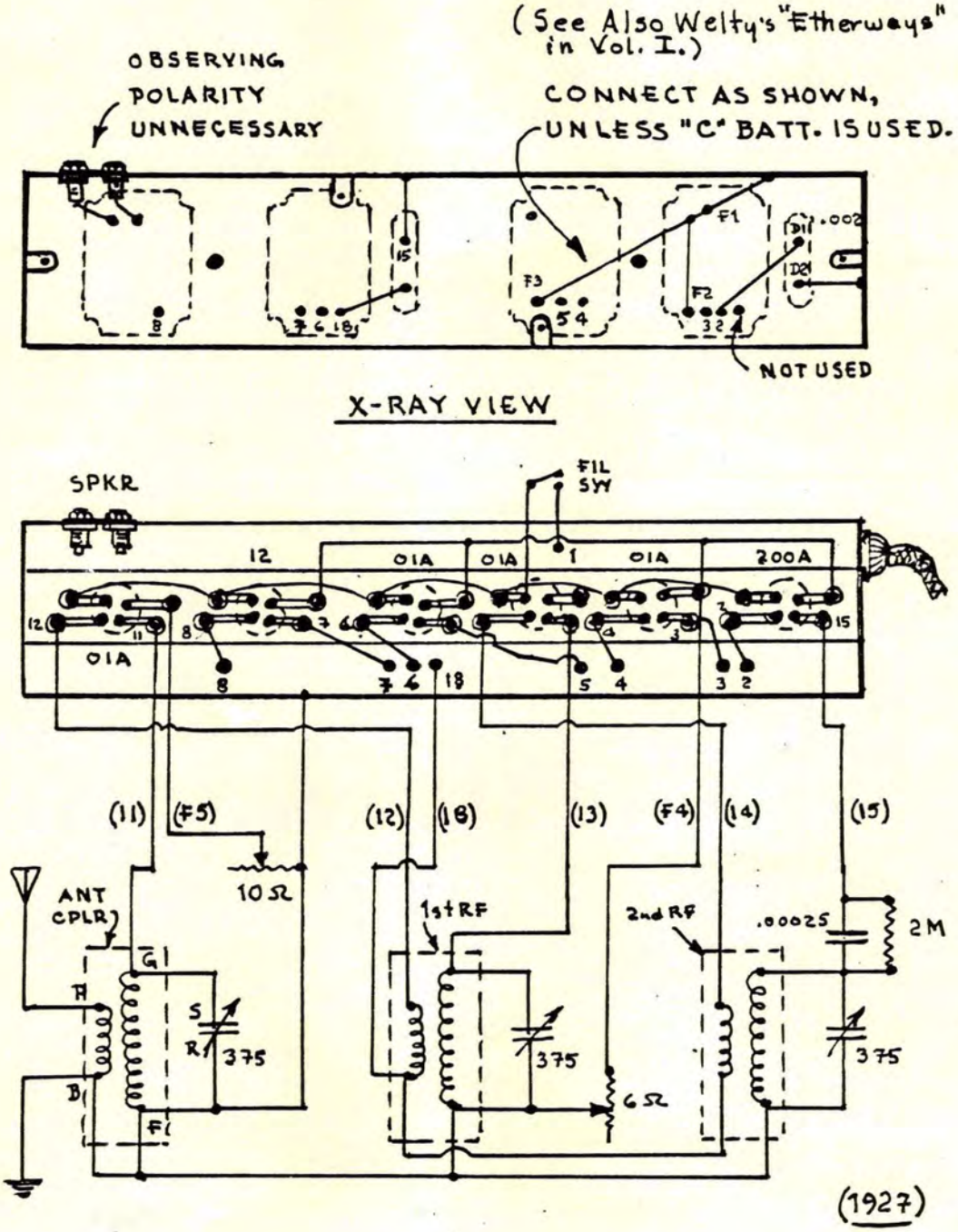

ALLIED "FIND ALL FOUR" 1930 VERSION
(See Also 1931 Version) (Sht. 1)
Allied Engineering Institute, N.Y.C.

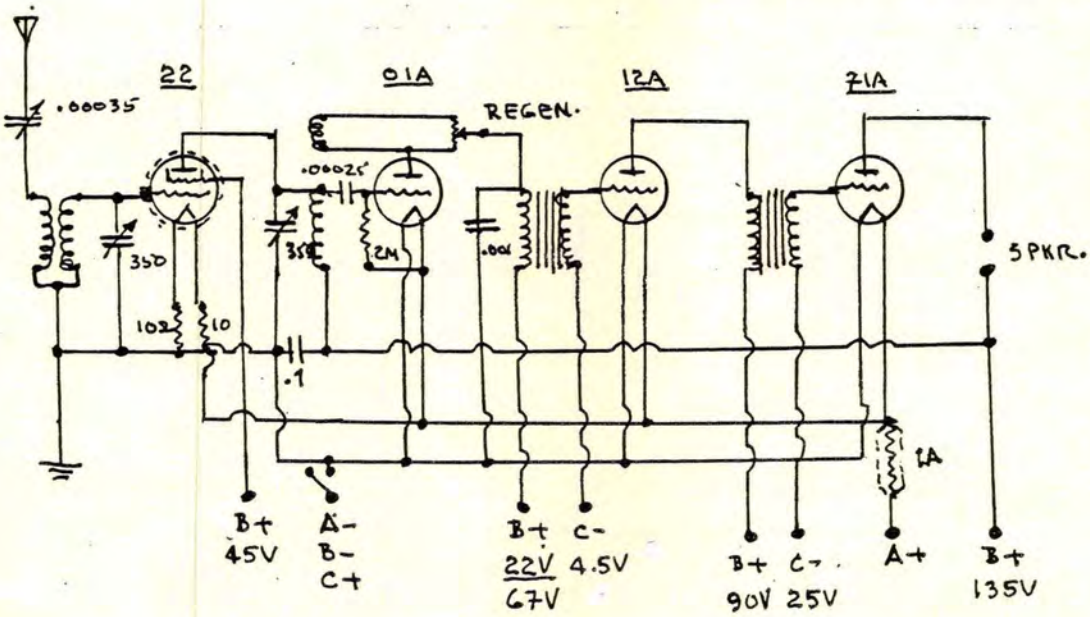

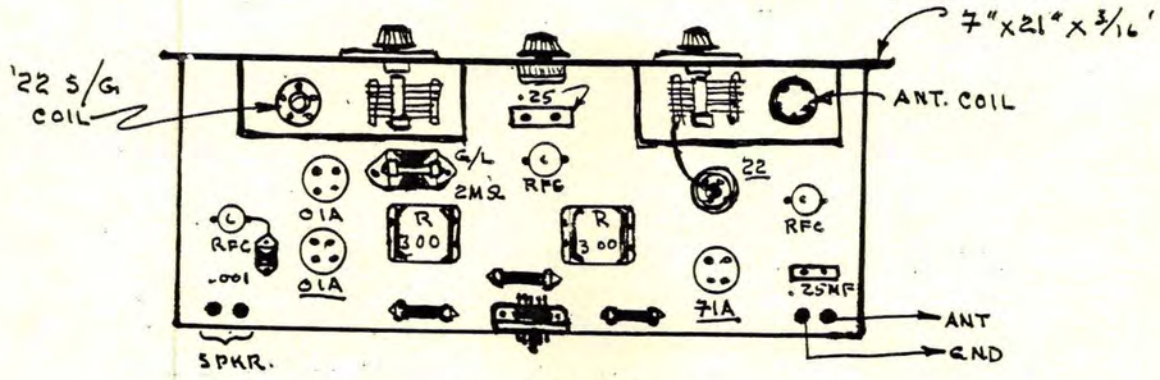

BOTTOM VIEW
CISIN's 1st VERSION
(The Original Rcvr.)

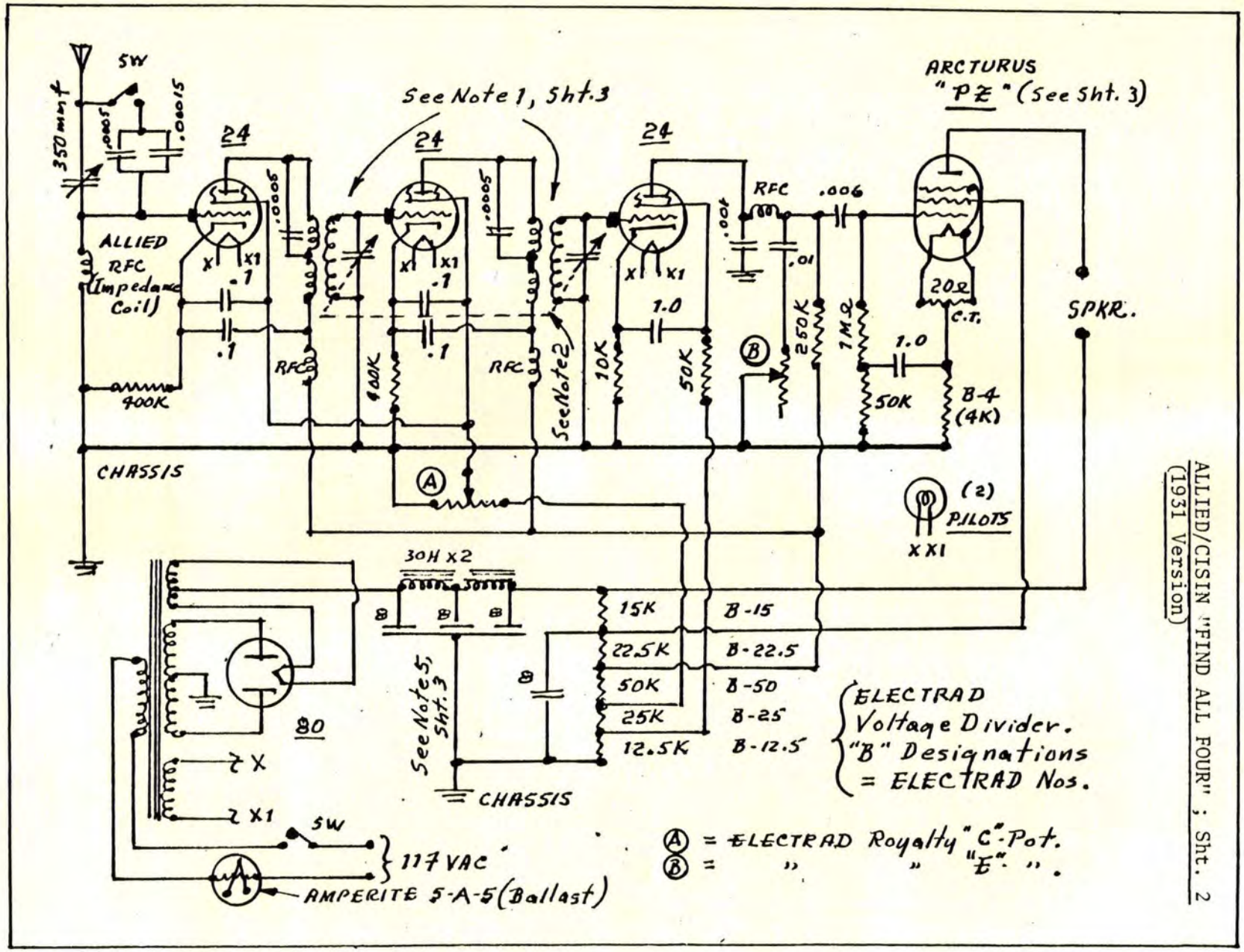

ALLIED/CISIN "FIND ALL FOUR"; Sht. 2
(1931 Version)

ALLIED/CISIN "FIND ALL FOUR", Sht. 3

ARCTURUS "PZ" SPECIFICATIONS:

Filament Voltage	=	2.5VAC
Filament Current	=	1.5A
Plate Voltage	=	250VDC
Plate Current	=	32mA
Grid Voltage	=	250VDC
Grid Bias	=	-16.5VDC
Power Output	=	2.5W
Grid Current	=	7.5mA
Load Resistance	=	7,000-ohms

NOTES:

1. Coils were Allied coils, numbered P-SG.
2. Ganged variables = 350 mmfd.
3. Chassis was ground.
4. Electrad "Tonotrol" across SEC of 1st AF transformer was optional.
5. 1931 chassis was 16-gauge steel, formed as shown.
6. Original condenser block in power supply was Aerovox 5-8888.

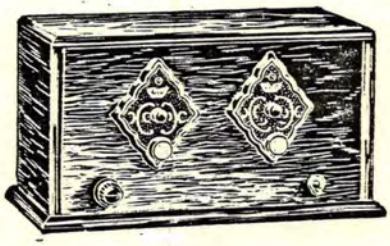

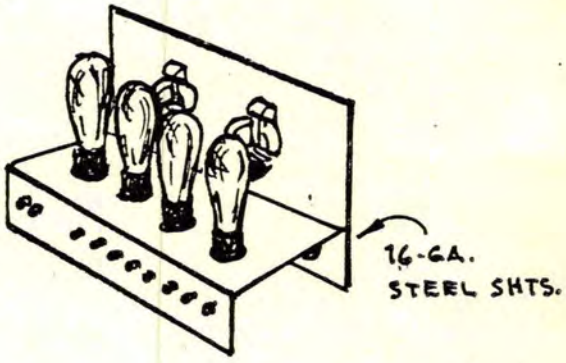

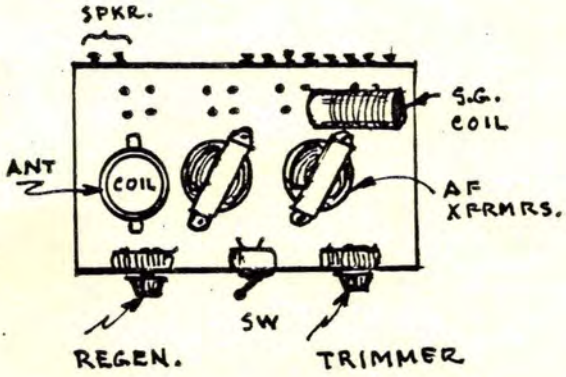

BOTTOM VIEW OF ORIGINAL MODEL (1931)

"AMPLIDON #2" - TRY-MO/WALLACE:1930: Sht. 1

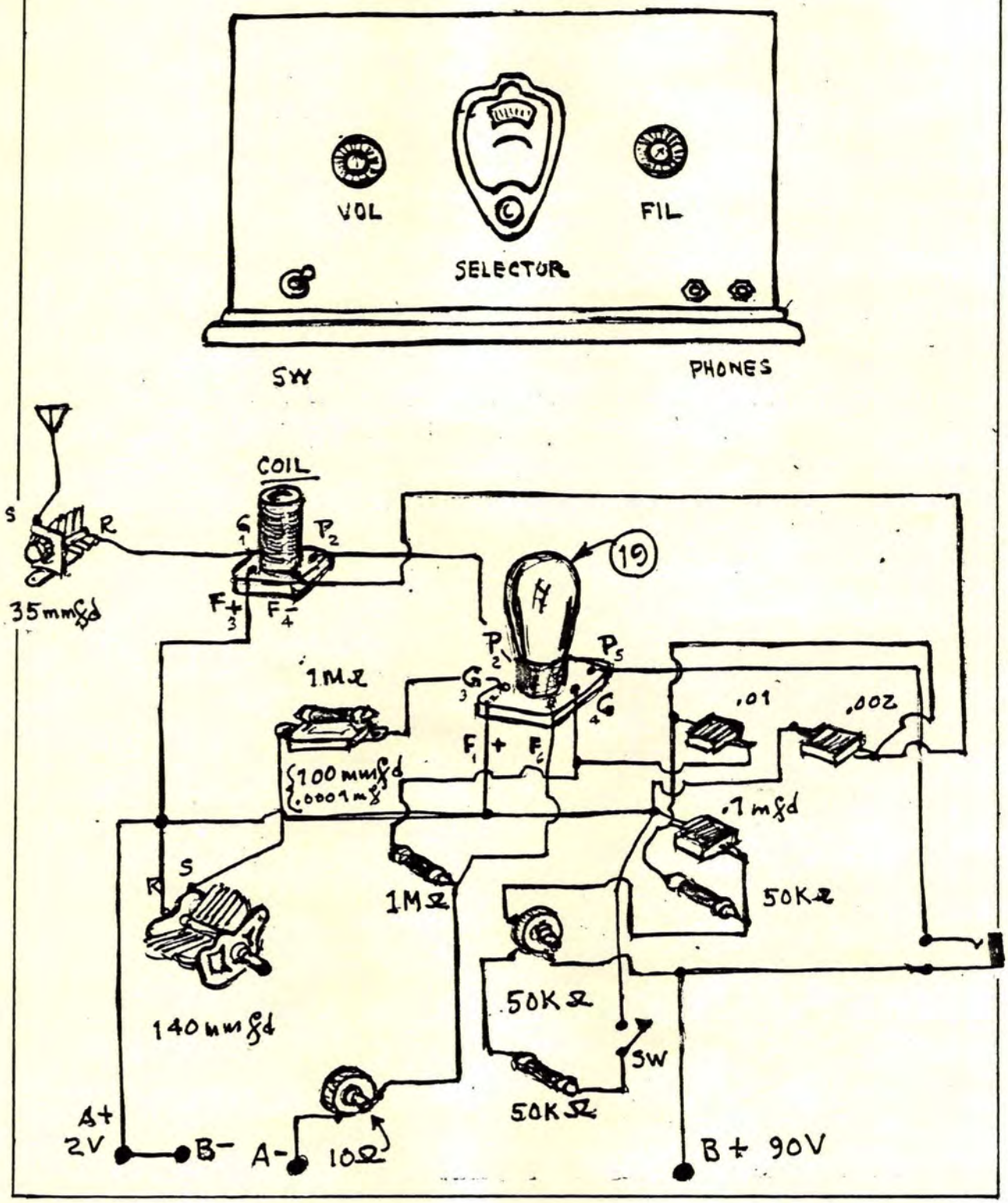

"AMPLIDON #2" - TRY-MO/WALLACE, 1930
(Sht.2)

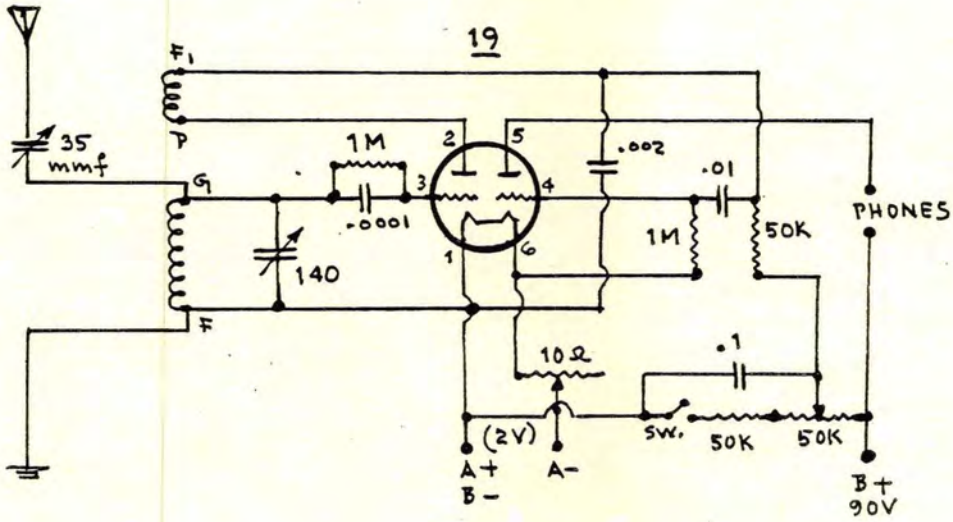

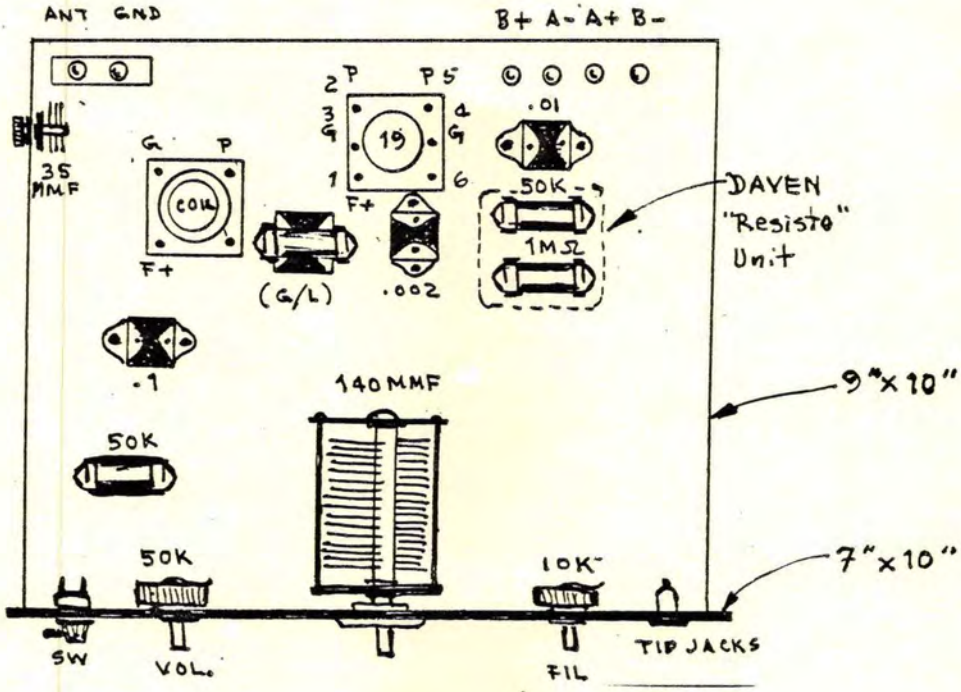

"AMPLIDON #1" - TRY-MO/WALLACE, 1929

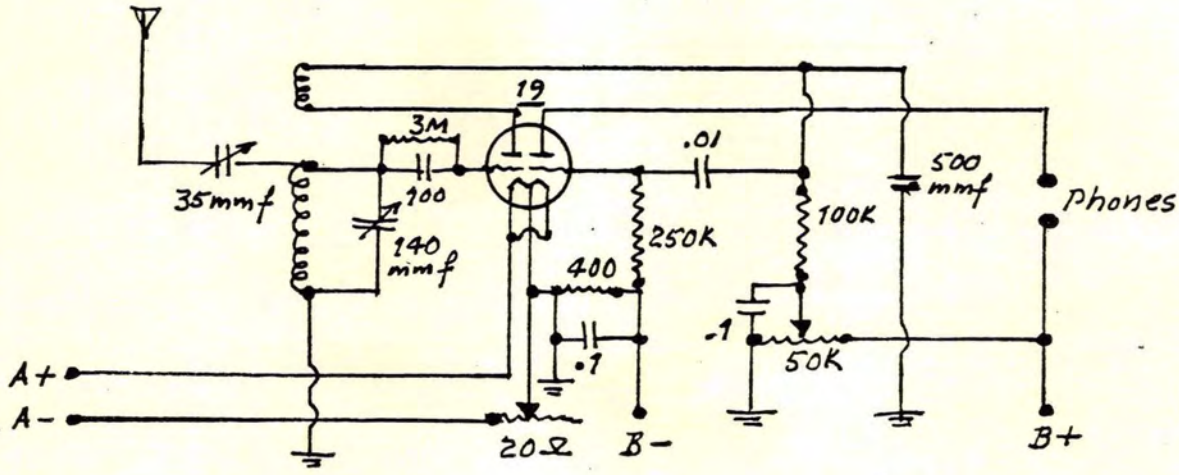

Panel and baseboard layout similar to "Amplidon #2", q.v.

AM-RAD AC-5 NEUTRODYNE RCVR., 1926

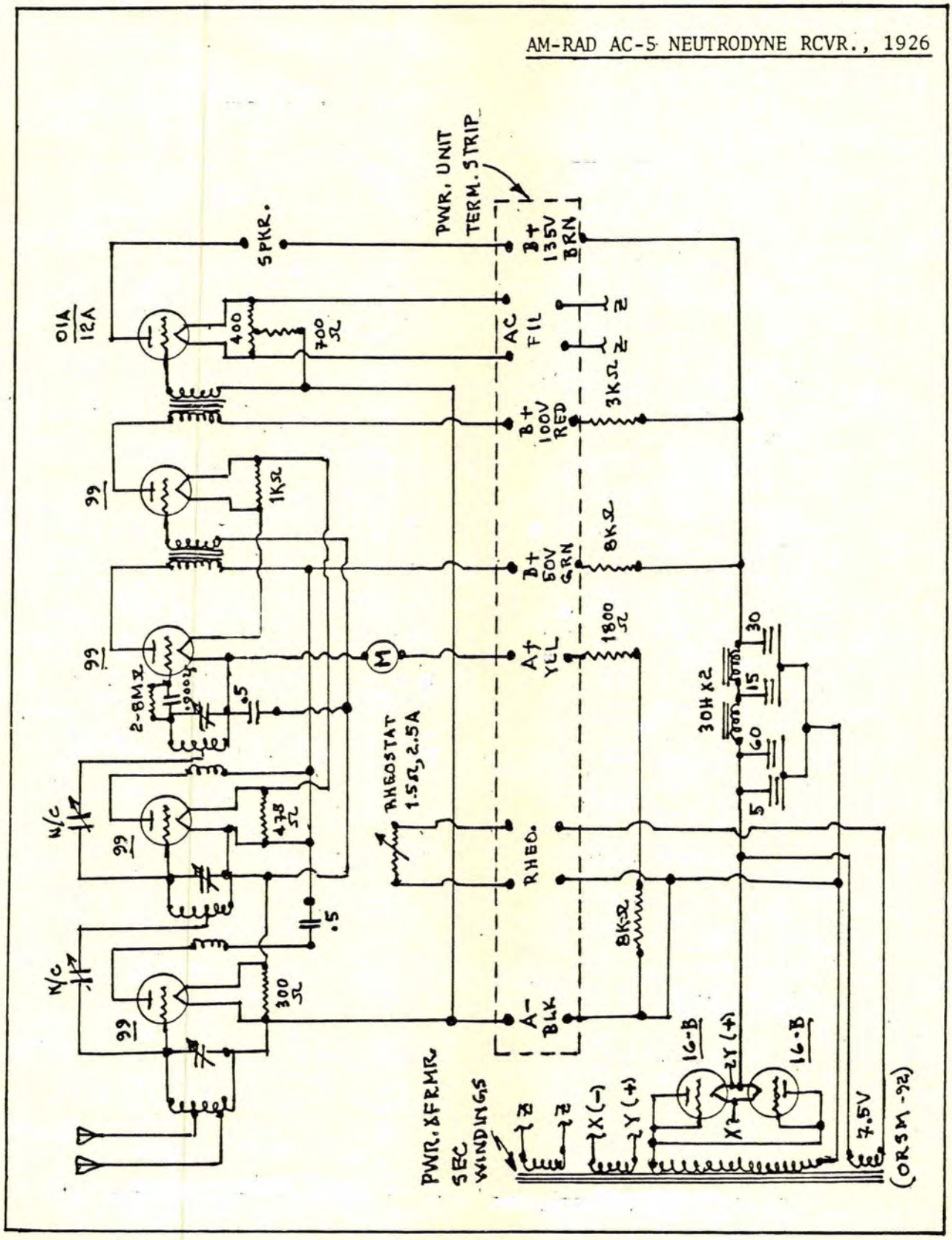

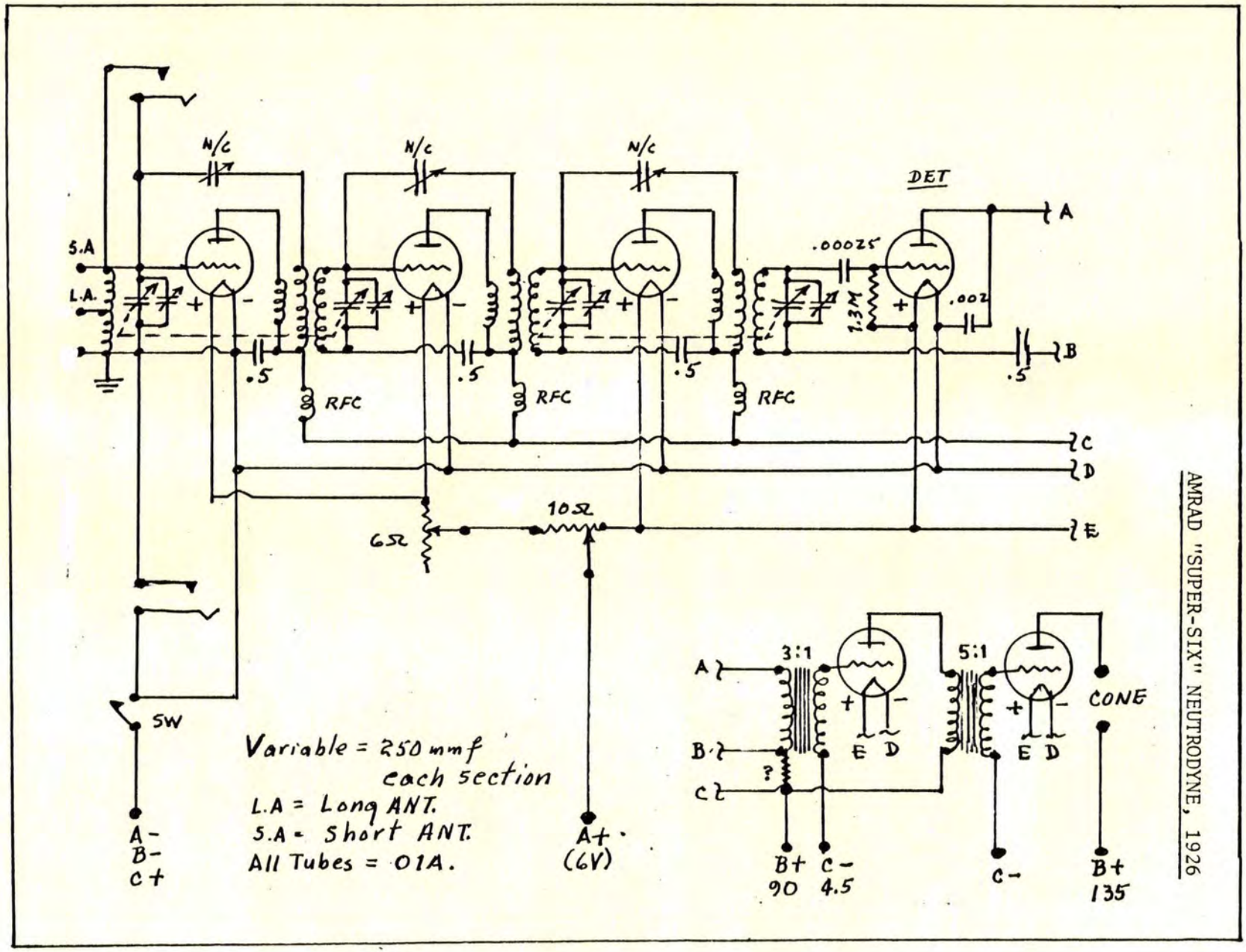

AMRAD "SUPER-SIX" NEUTRODYNE, 1926

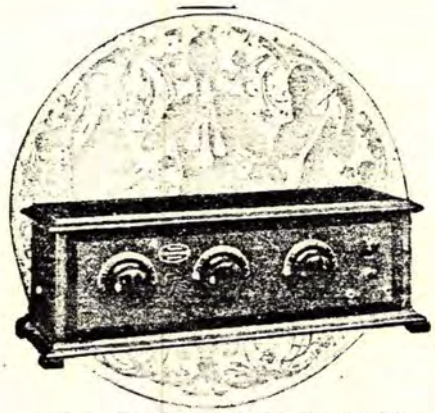

ARBORPHONE

ARBORPHONE NEUTRODYNE, 1926

While the two cuts on this page show what was in vogue with the Consolifated Radio Corporation, of Ann Arbor, their marque endured for several years.

The Arborphone was the first of the commercial set manufacturer who utilize the Loftin-White circuit for the AF amplification sexion of their circuitry.

A couple of years after they produced the set shown they in keeping with the trend towards more aesthetical cabinetry, they came out with a cabinet with severely rounded corners, and a large central escutcheon, which was rather appealling. A cut of that style, as well the schematic for it, will be found in Volume II-A.

The old saw that it pays to advertise was obviously much in evidence during the Twenties, and many radio set manufacturers found effective advertising in placing banner declarations on the sides of busses, trolley-cars, newspaper kiosks, and the like. The visual pollution we know today as Bill-Board Advertising had not yet gained the dominance it now has, and some ingeneous methods were employed to advertise, one such method is shown below, used by many manufacturers.

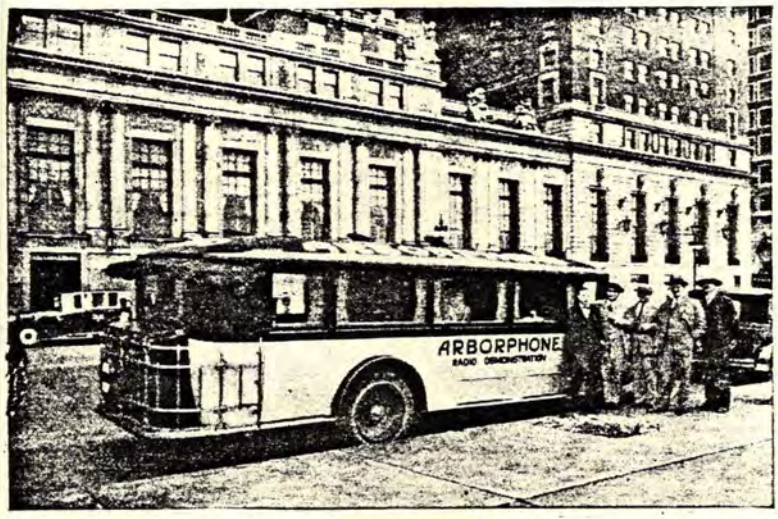

ARGUS Model B-125 TRF, 1925

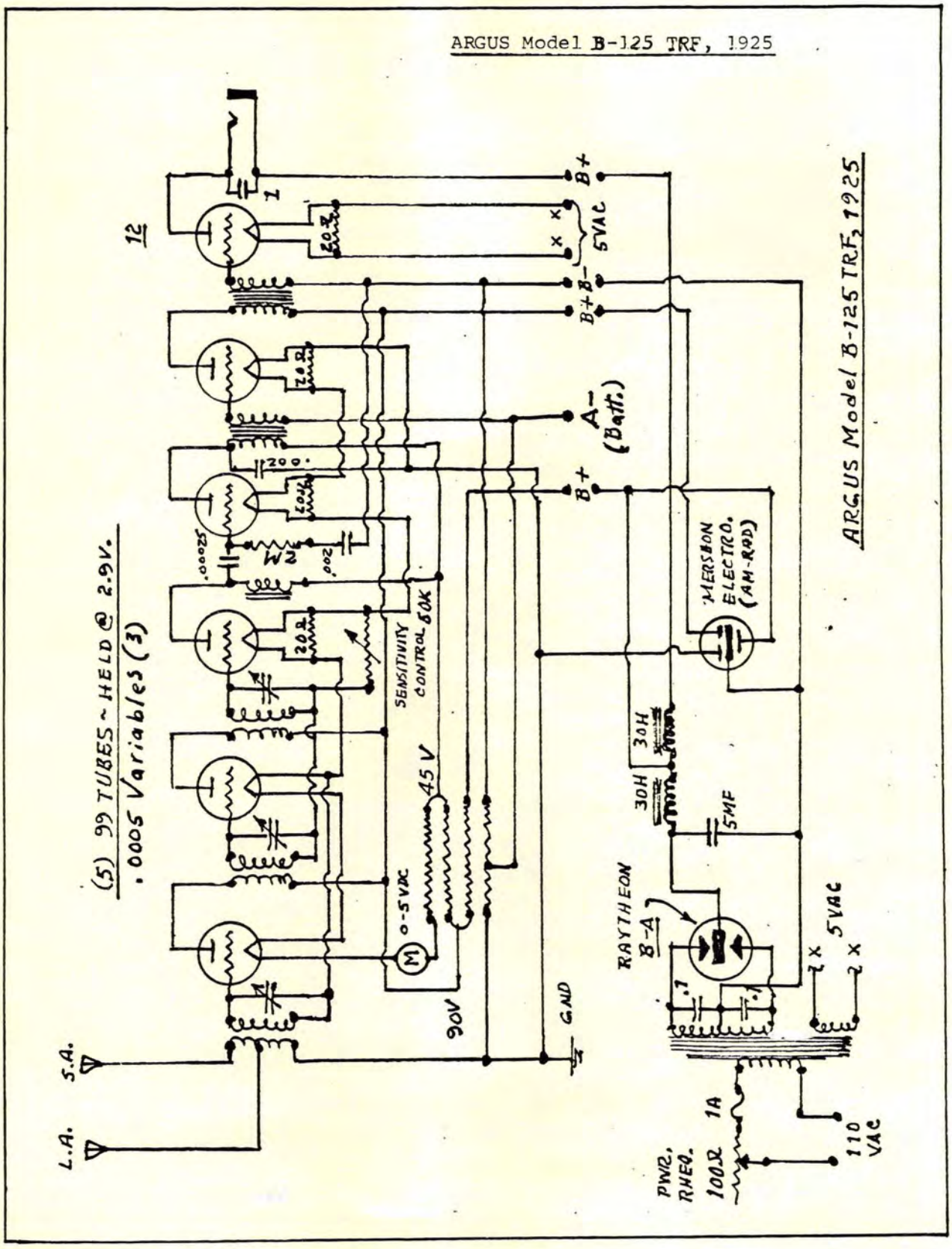

ARMSTRONG SHIELDED SUPER-HET, 1926
(Sht. 1)

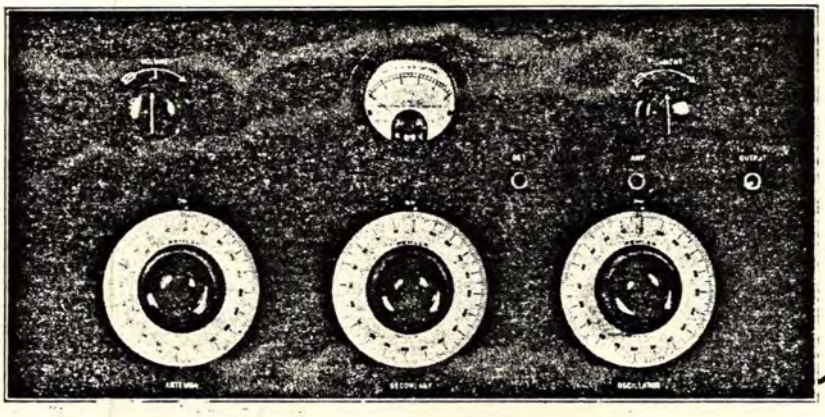

REMLER DIALS

10"x21" PANEL

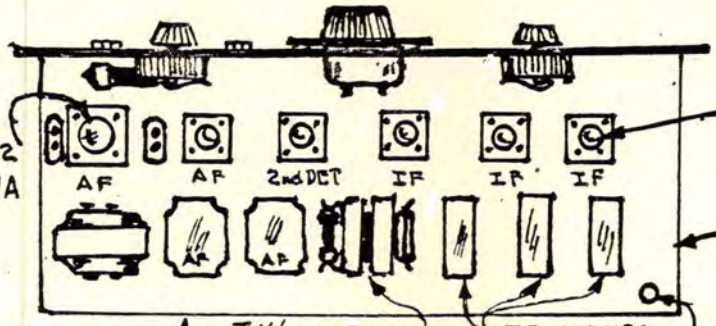

PLAN VIEW

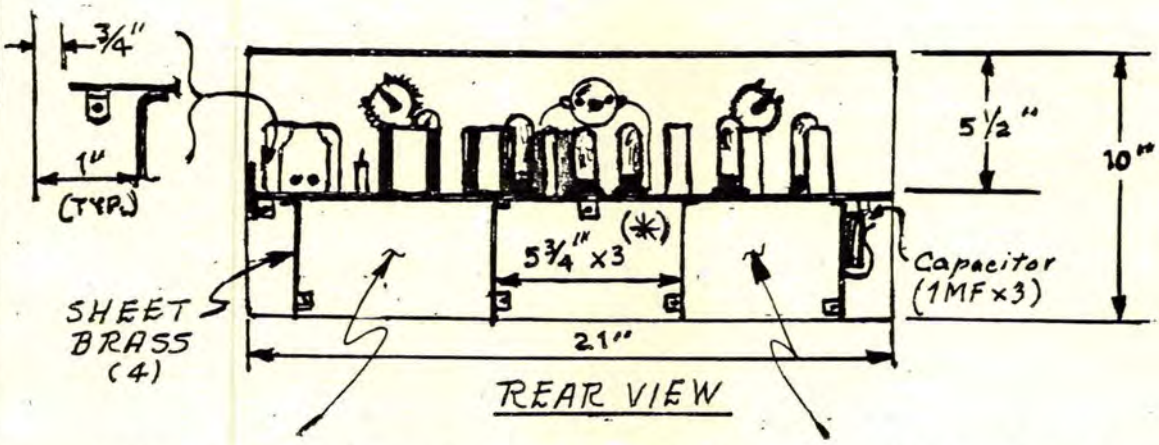

REAR VIEW

Variables/AF Coil/Tubes/Plate Choke/Feed-Back Cond./By-Pass

OSC Coil/ RFC(3)/Variable/Tubes/ By-Pass Condensers

ARMSTRONG SHIELDED SUPER-HET, 1926;Sht.2

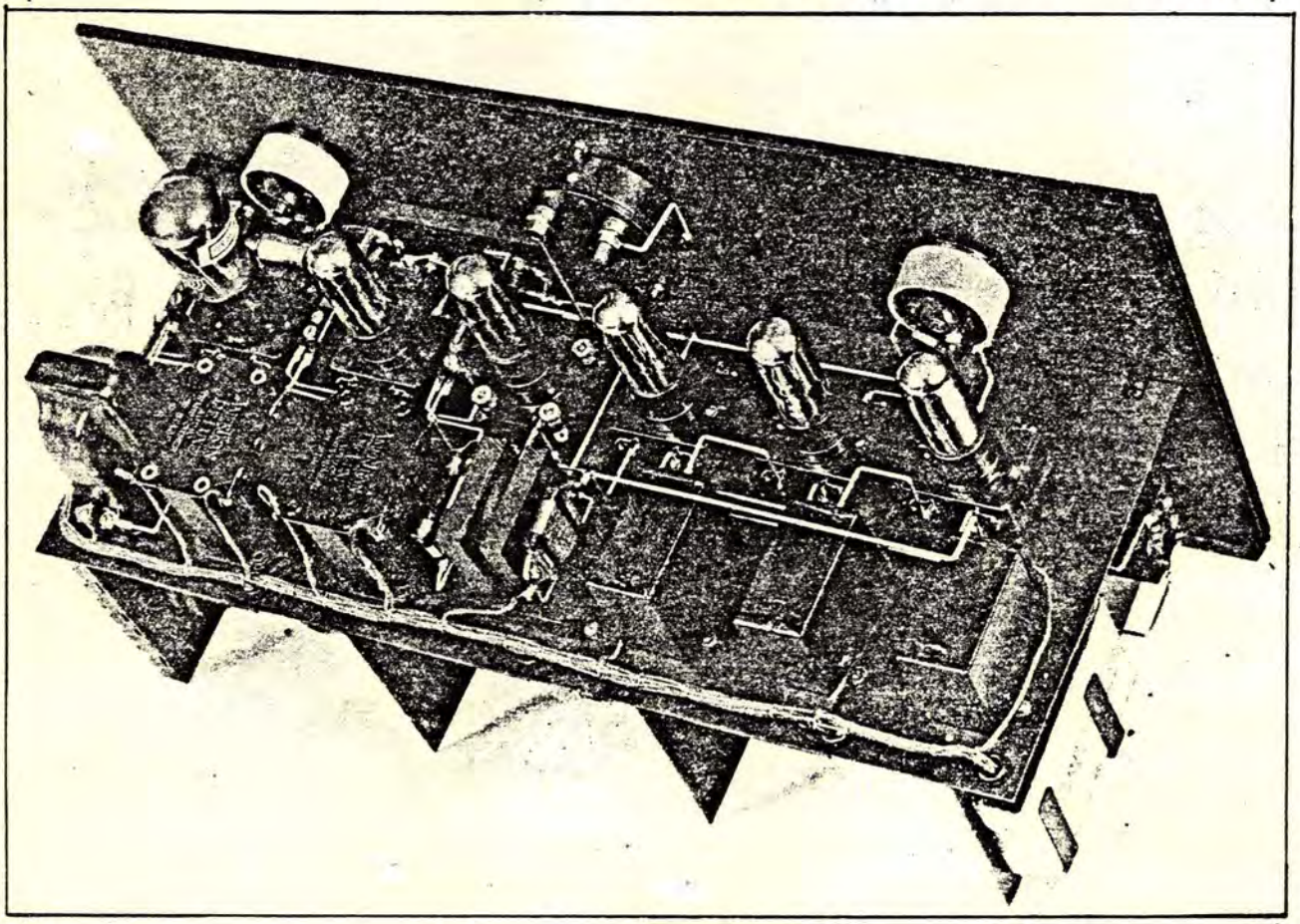

Sht. 1:
(*) = this compartment contains the freqency-changer tube, feed-back condensers, B+ choke, and by-pass.

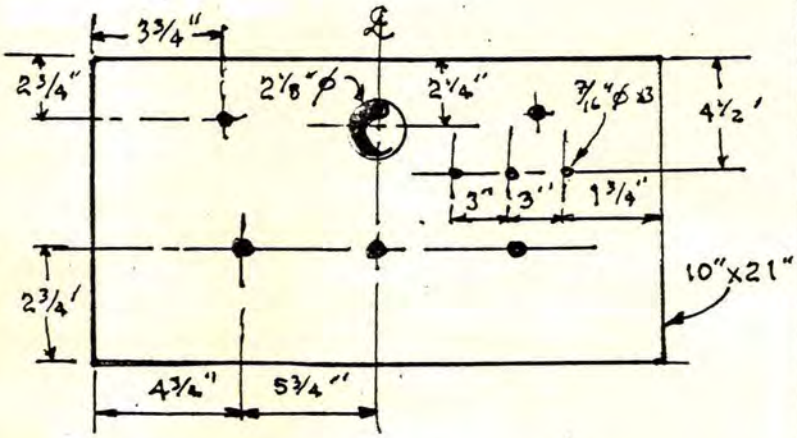

PANEL HOLE-PATTERN

ARMSTRONG SHEILDED SUPER-HET, 1925
(Sht. 3)

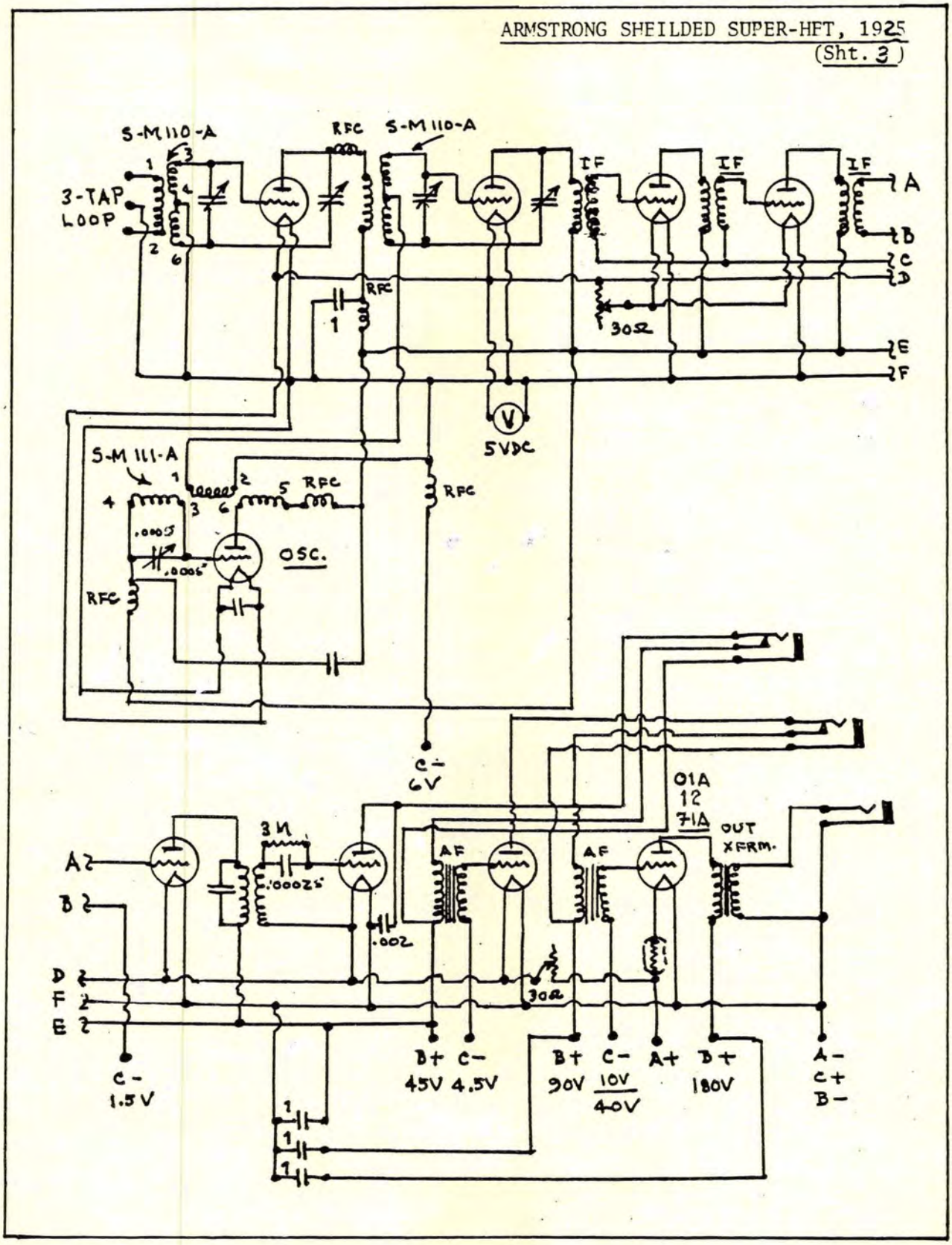

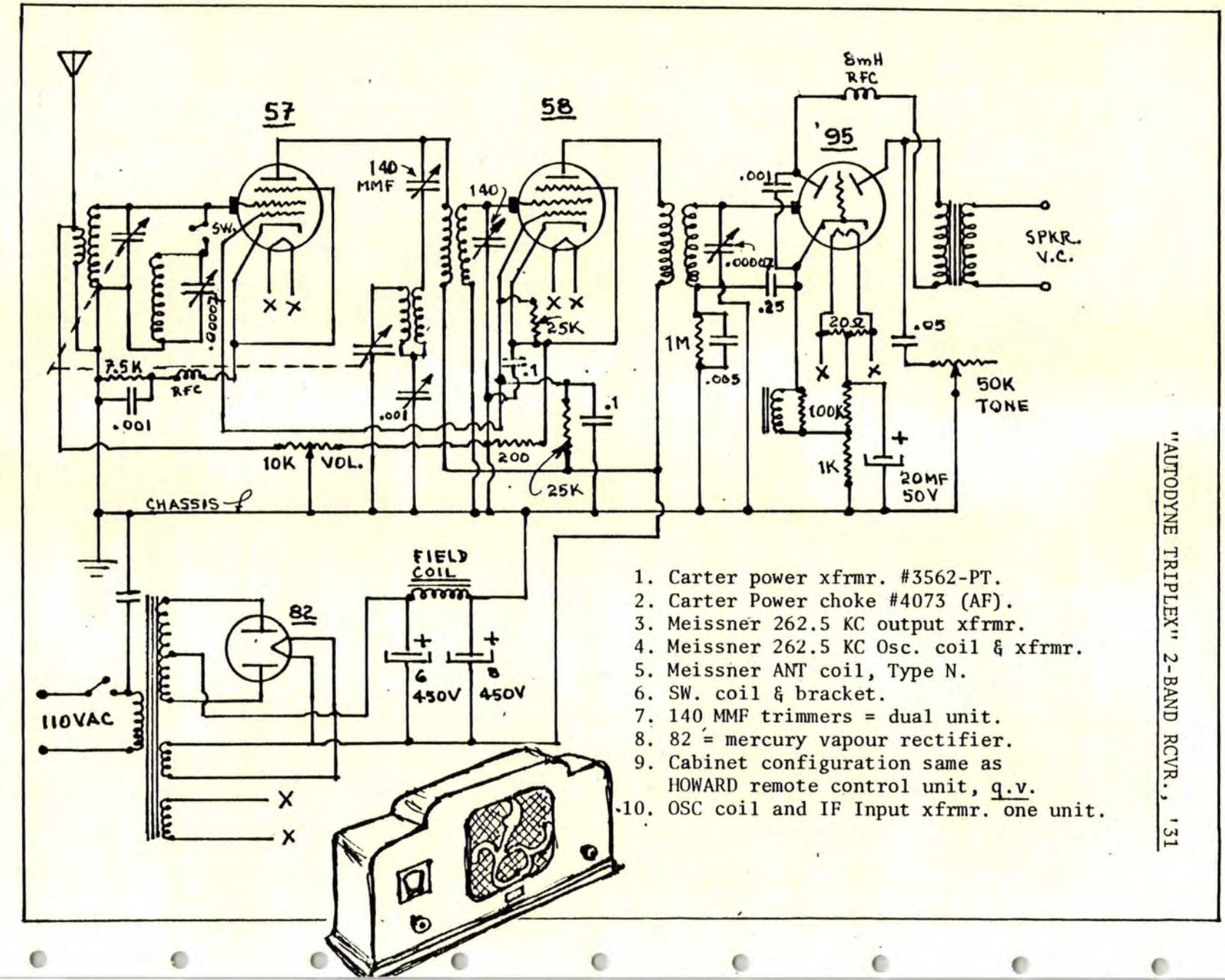

1. Carter power xfrmr. #3562-PT.
2. Carter Power choke #4073 (AF).
3. Meissner 262.5 KC output xfrmr.
4. Meissner 262.5 KC Osc. coil & xfrmr.
5. Meissner ANT coil, Type N.
6. SW. coil & bracket.
7. 140 MMF trimmers = dual unit.
8. 82 = mercury vapour rectifier.
9. Cabinet configuration same as HOWARD remote control unit, q.v.
10. OSC coil and IF Input xfrmr. one unit.

"AUTODYNE TRIPLEX" 2-BAND RCVR., '31

BABY 1-TUBE PORTABLE; 1925
(Sht. 1)

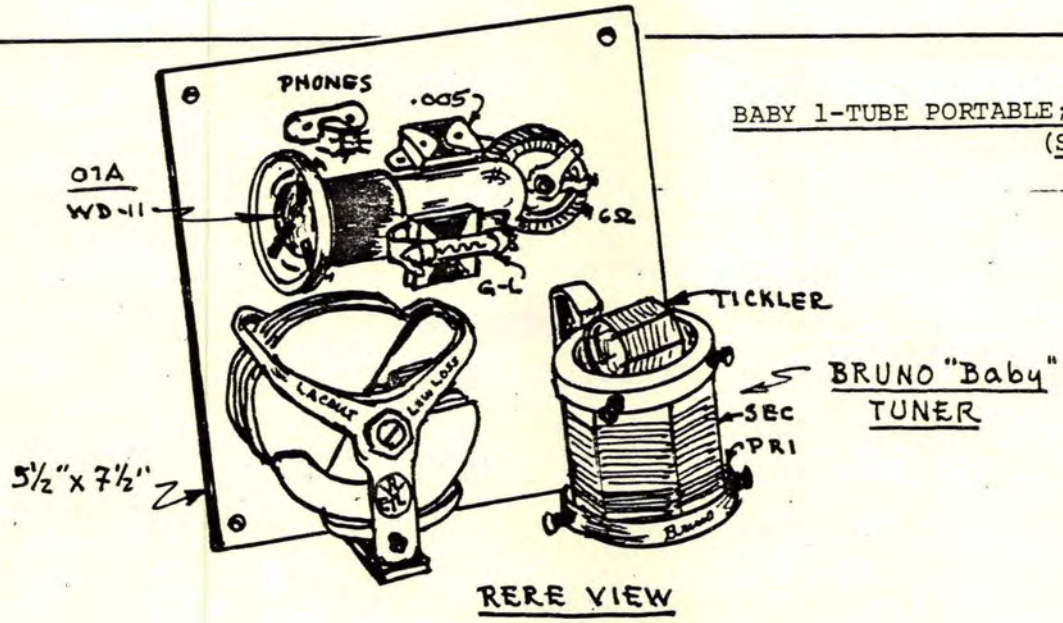

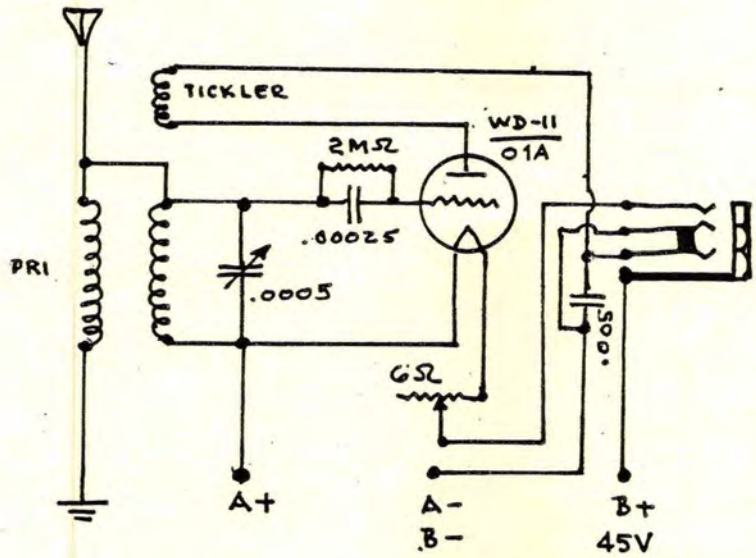

BRUNO "Baby" 3-Circuit Tuner (or Coil Listed Below).

COIL DATA:

Coil Form = 4" x 3" Ø.
6 Terminals; 3 At Each End.
Quartzite Coil Form.
Tickler Coil Form = 2" x 2" Ø.
PRI = #24 SCC; Start at bottom of form,
9 turns, tie; leave .125" space;
SEC = #24 SCC; 52 turns, tie to opposite terminal.
Tickler = 15T + ¼" spacing + 15T.

(RW 5-16-25)

BABY 1-TUBE PORTABLE; 1925
(Sht.2)

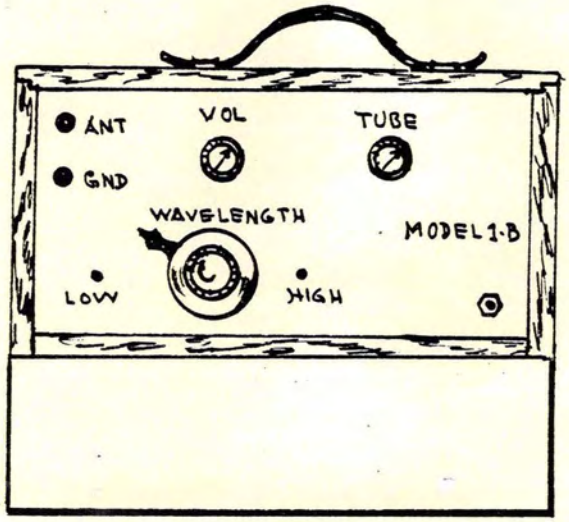

Panel = 7½" x 5½"; Hard Rubber.

Bruno #99 "Baby" Coil.

Lacault Variable .005 (23 Plates).

#4 Saturn Jack.

Kurtz-Kasch Knobs.

Rheostat = 10 or 6 ohms, depending on tube.

DAVEN AF amplifier may be used for speaker operation.

BENSON 3X—SUPERFLEX, 1924; $85

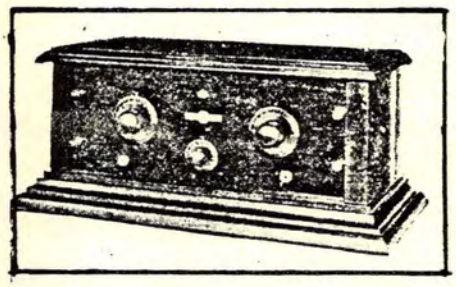

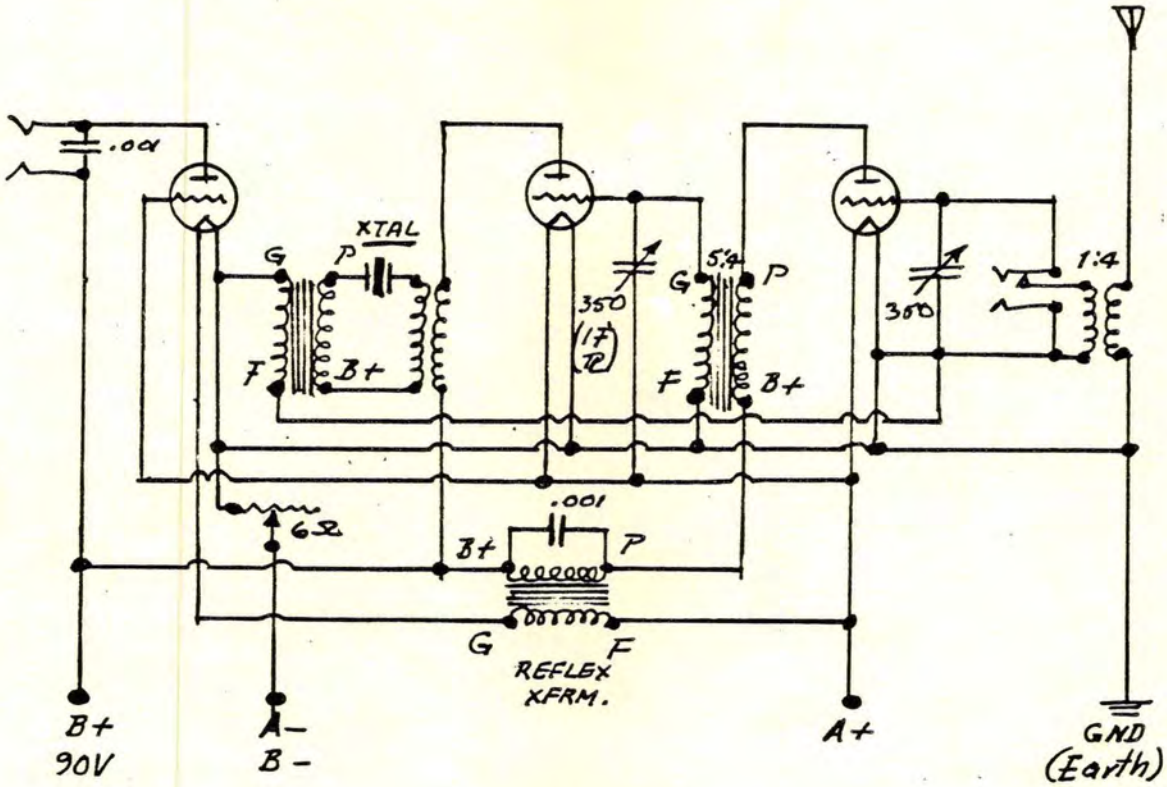

(3) 99/01A Tubes, rheostat to suit.

(CB Fall-24)

BERNARD 2-TUBE DX RECEIVER, 1925

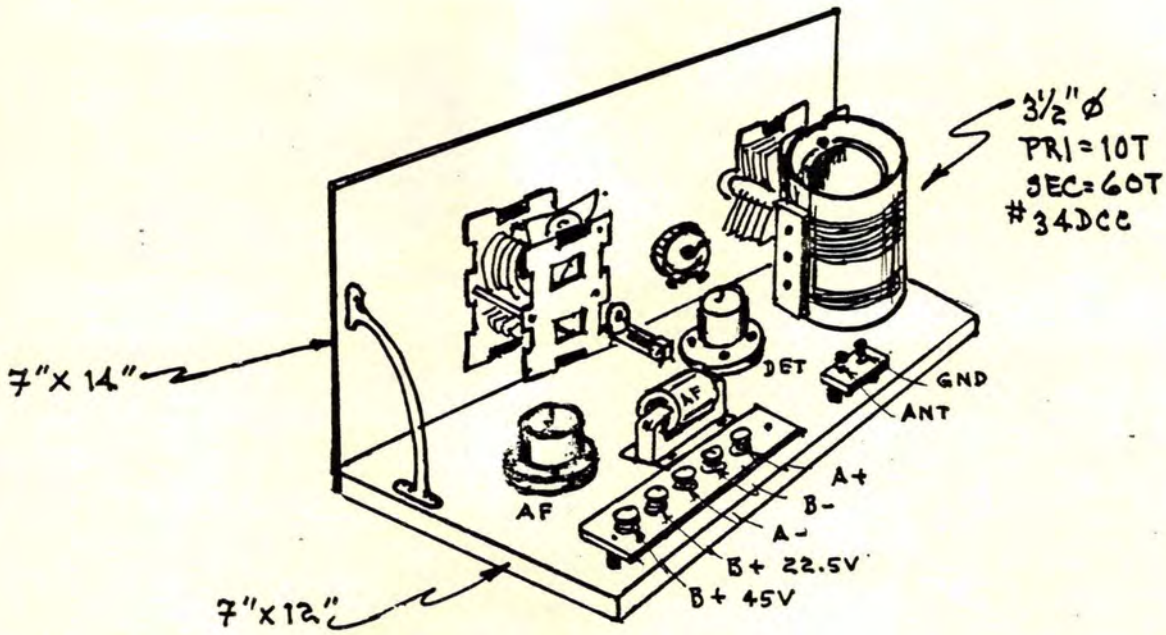

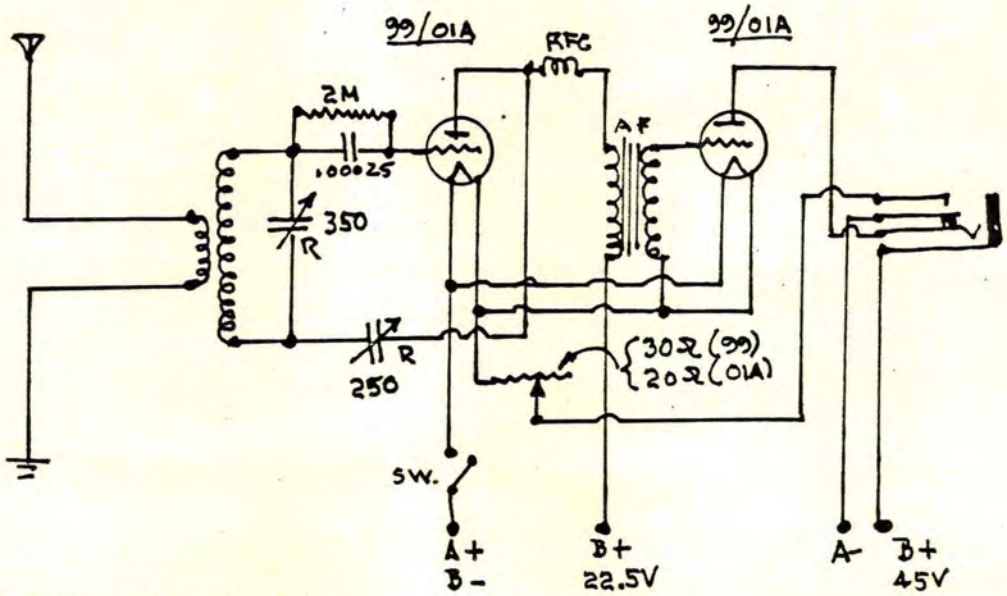

RFC = 135T. #24 DCC, 1½"Ø.
ANT Winding = top of PRI.
SEC to top of both rotors.

(RW 4-10-26) (RW 10-24-25)

BERNARD "AUDIO-BASIN", 1927

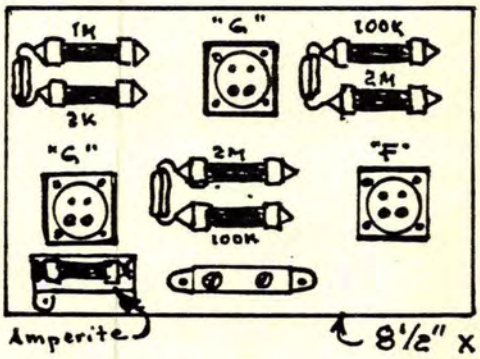

(See also LYNCH's Audio Deck in Vol. II-B for similarity of conception.)

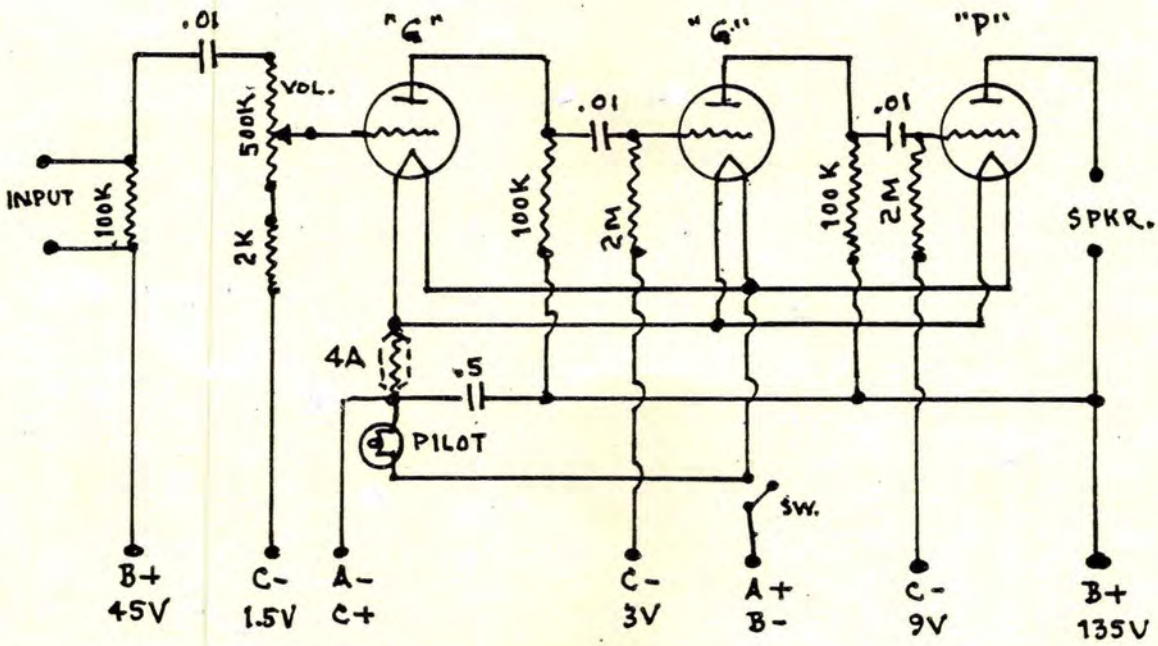

NOTES:

1. FIL switch was on VOL. control.
2. Originally used with Lata-Balsa wood speaker.
3. All tubes were Ce-Co.
4. FIL switch controls Amplifier only.
5. Cplng. condensers were soldered to lugs of resistors.
6. "P" tube could be a 10, with proper FIL and PLATE voltages.

(RW-10-8-27)

THE BERNSLEY PORTABLE, 1926

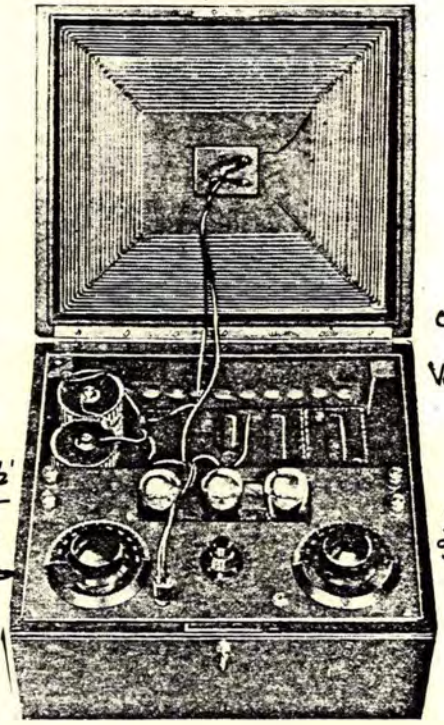

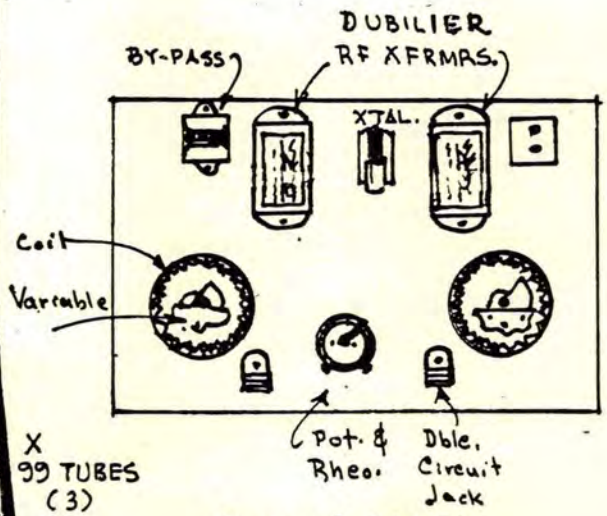

X
99 TUBES
(3)

Carborundum Fixed Crystal.
Loop = 21T of loop wire.
44T #22 DSC SEC, both coils.
10T #22 DSC PRI, ANT coil.
15T #22 DSC PRI, RF coil.

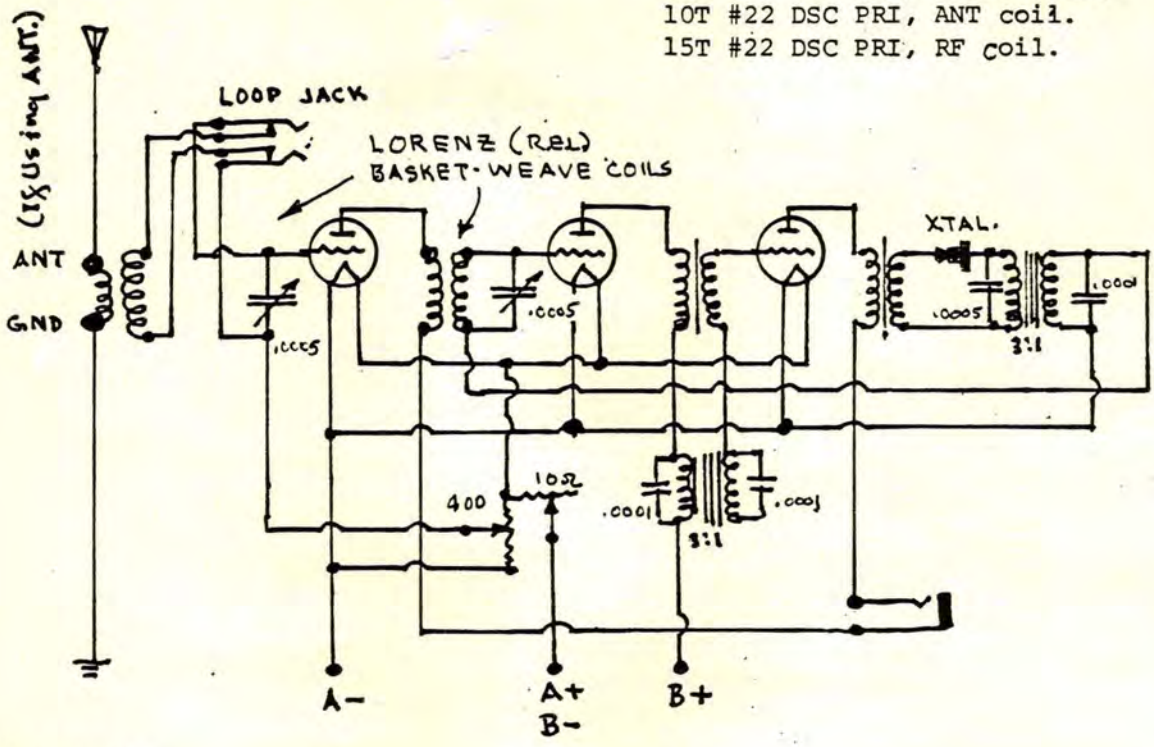

(RN. 8-26)

BEST's TUNED RF AMPLIFIER, 1926; Sht. 1

This was an original design by Best, and reflected an acute awareness of the problems abroad in the land. It was also the first judicious use of shielding. The unit can be used in several applications, as are depicted over-leaf. I've built the unit, and it works.

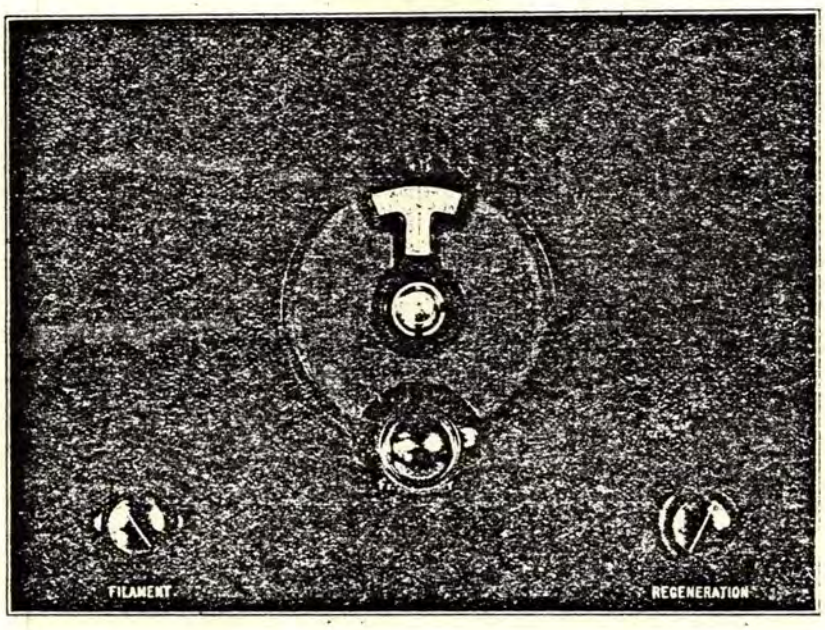

MAJOR PARTS LIST

(2) S-M Type 110-A Coils w/ Sockets.
Cardwell 350 mmf Variable.
S-M 250 Variable.
Amperite (1-A).
(2) RFC, 60-85 mH.
1 MFD By-Pass.
Vernier Dial.
Panel = 8½" x 12", Bakelite.
Sub-Panel = 6" x 7", Bakelite.
Two Pieces of Brass Sheeting: 8½" x 12" x 1/16";
4"x 6" x 1/16".

Comparable parts may be substituted.

BEST's TUNED RF AMPLIFIER, 1926; Sht. 2

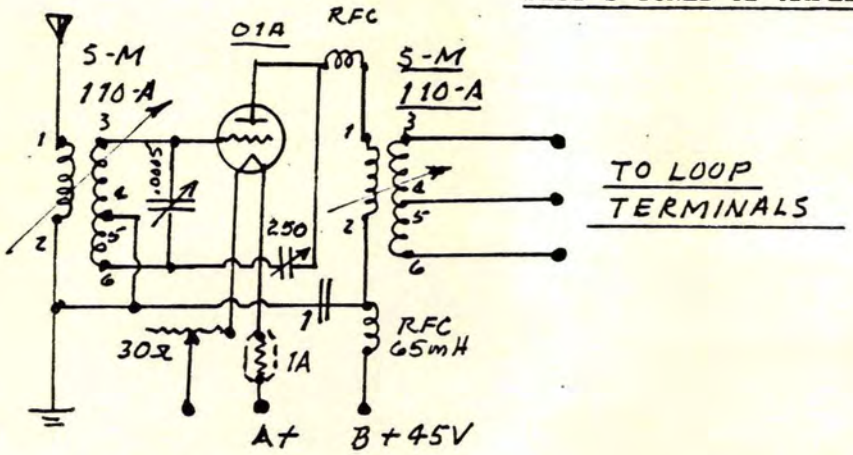

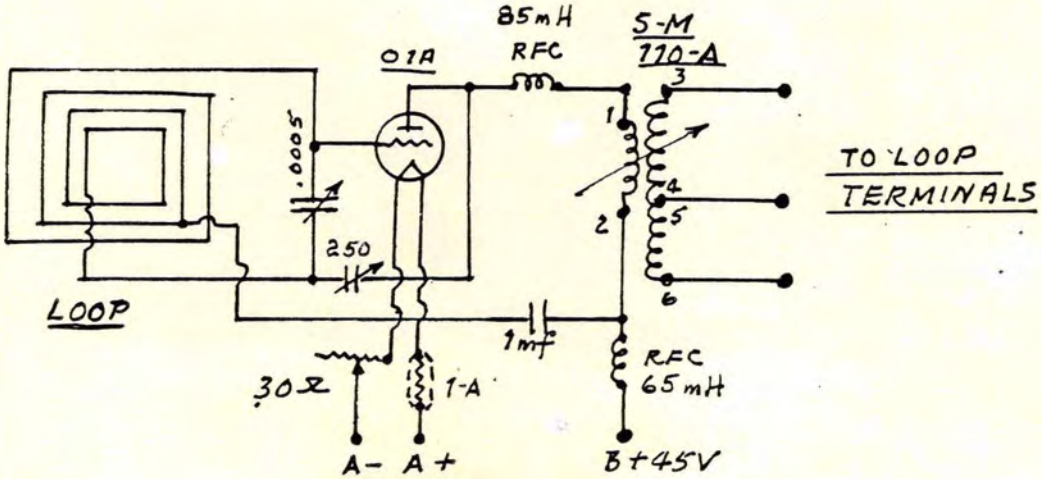

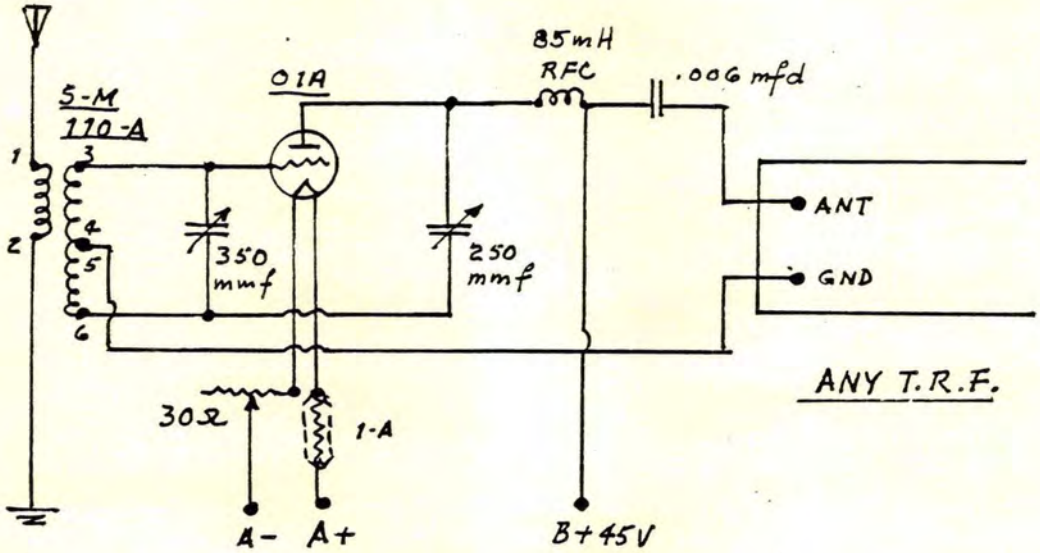

BEST's TUNED RF AMPLIFIER, 1926; Sht. 3

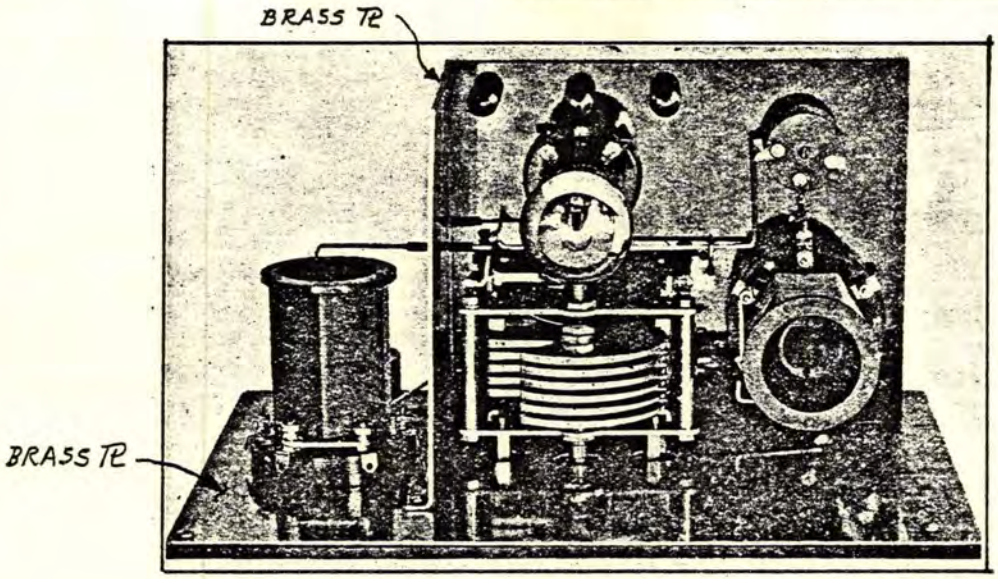

PLAN VIEW

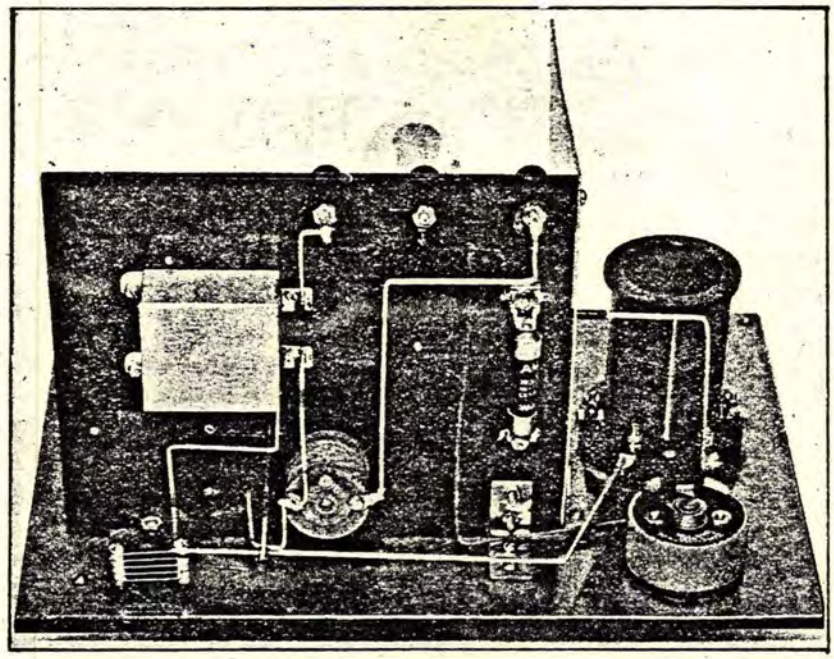

BOTTOM VIEW

THE EVOLUTION OF BEST's 45 KC. Super-Het; Sht. 1

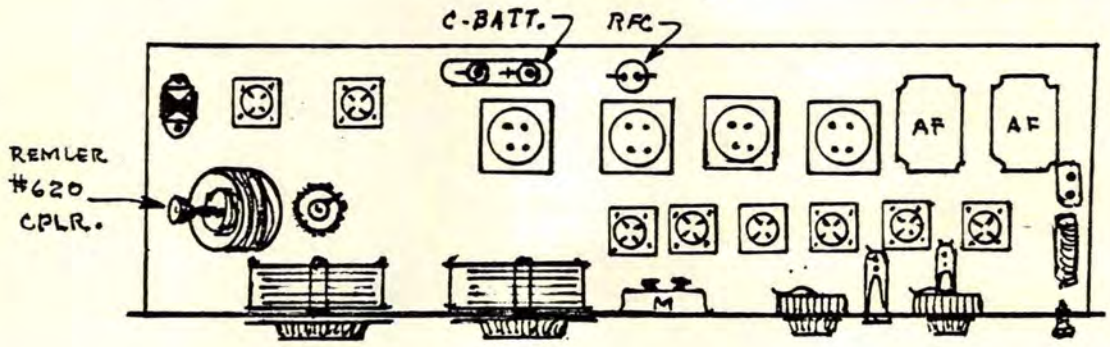

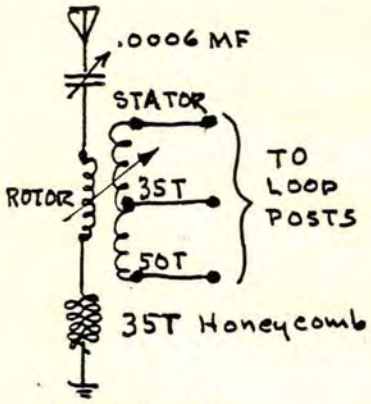

BEST's ANT TUNER
(Also used w/ REMLER 45KC. Super-Het.)

THE LAST BEST 45KC. SUPER-HET

GERALD M. BEST, like many another, was exposed to Radio during the Kaiser's War, and, also like many another, worked for a couple of the emerging magazines devoted to Radio, chiefly with the title of Technical Editor.

There can be no doubt as to his competence as a technical editor, as witness the Q&A columns he produced. But what may surprise one was the fact that he really never came up with a good, better, original circuit design.

The first serious effort seems to have been his much-modified and improved and altered 45 KC. Super-Het. That it was superceded by the REMLER 45 KC. was justified, as even a casual purusal of both circuitry will reveal. That both Best and E.M. Sargent were also involved with REMLER at the time may have had some significance, lost now in the archives of the past.

The sketches presented here simply show the evolution of Best's thinking, and his apparent inability to really design a worthwhile receiver. His final effort was known as the BEST 115 KC SUPER-HET, and it was much more successful on all counts, but, again, because it was neither novel nor advanced, it is not detailed here, as the REMLER 45 KC. was the better circuit.

However, if you have an old BEST unit or are actually interested in his circuitry, full data are available from the publisher or Olde Tyme Radio Co., 2445 Lyttonsville Rd., Silver Spring, Md., 20910. A copy of the original full-scale blue-print is also available for the 115 KC. super-het from the publishers for $10.

(RNSB)

THE EVOLUTION OF BEST's 45 KC. SUPER-HET;Sht. 2

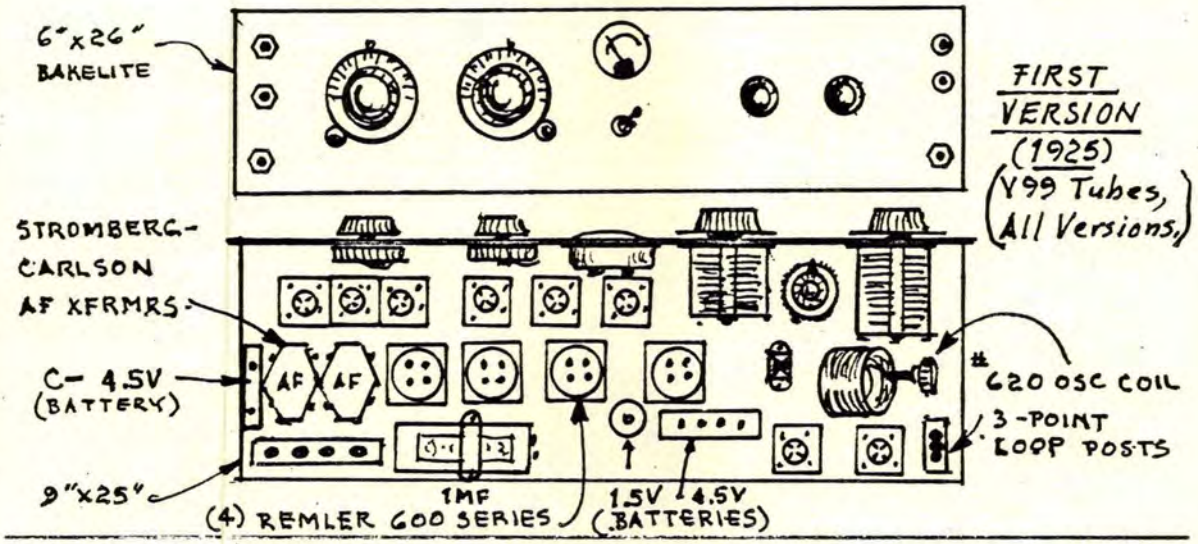

FIRST VERSION (1925) (Y99 Tubes, All Versions.)

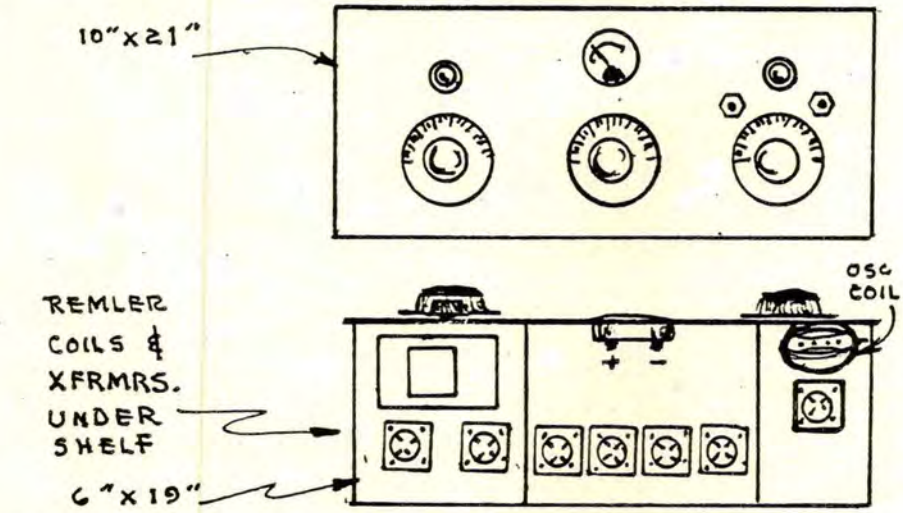

SECOND VERSION (1926)

(BRASS METAL SHIELDING ALL AROUND, SOLDERED.)

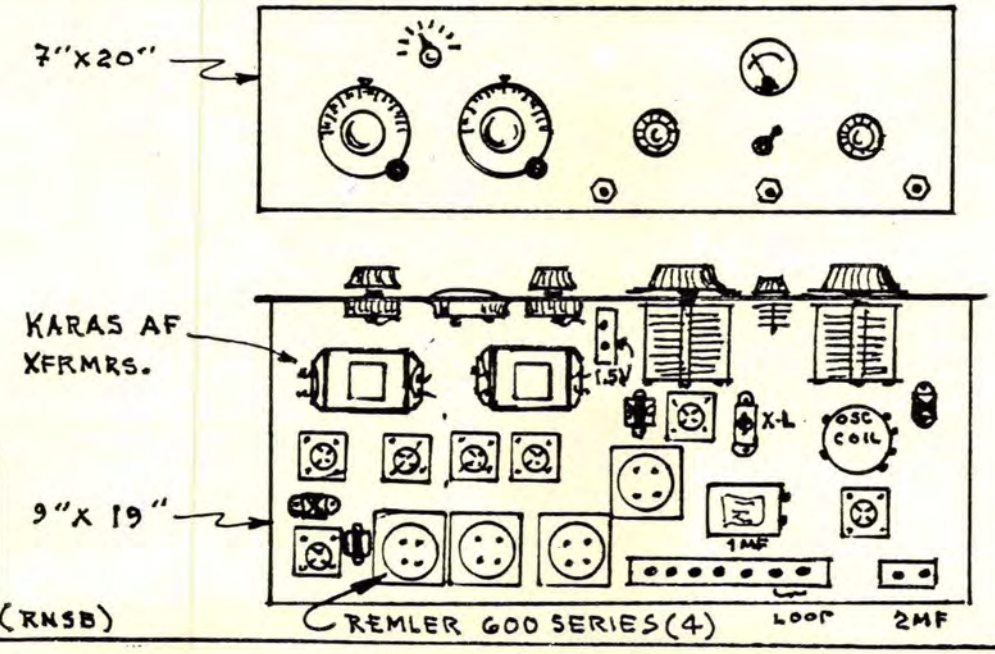

THIRD VERSION (1927)

(RNSB)

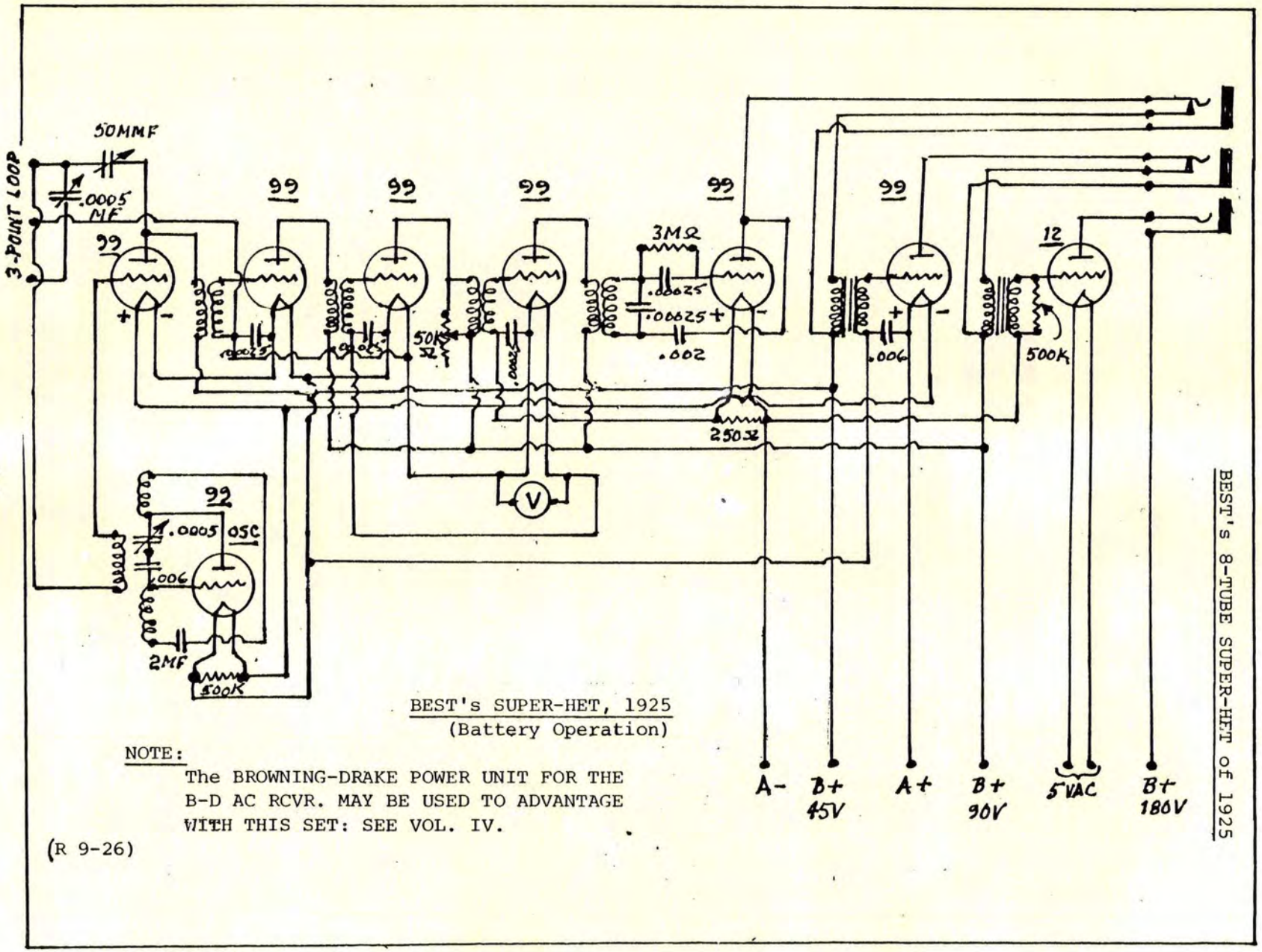

BEST's 8-TUBE SUPER-HET of 1925

BEST's SUPER-HET, 1925
(Battery Operation)

NOTE:
The BROWNING-DRAKE POWER UNIT FOR THE B-D AC RCVR. MAY BE USED TO ADVANTAGE WITH THIS SET: SEE VOL. IV.

(R 9-26)

BESTONE V-60 T.R.F., 1924
(Henry Hyman Co., NY)

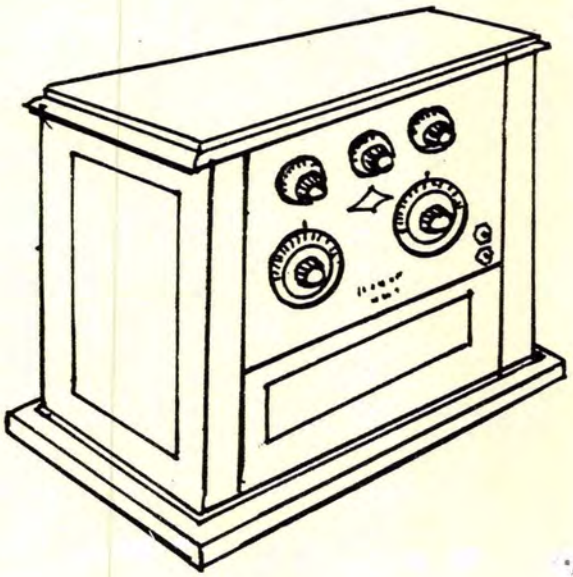

NOTES:

1. (2) 4"ø DIALS
2. (6) BINDING POSTS
3. 15 PL VARIABLES (ALL) (360 mmf)
4. NON-REGENERATIVE
5. BATTERIES IN BOTTOM of CABINET.

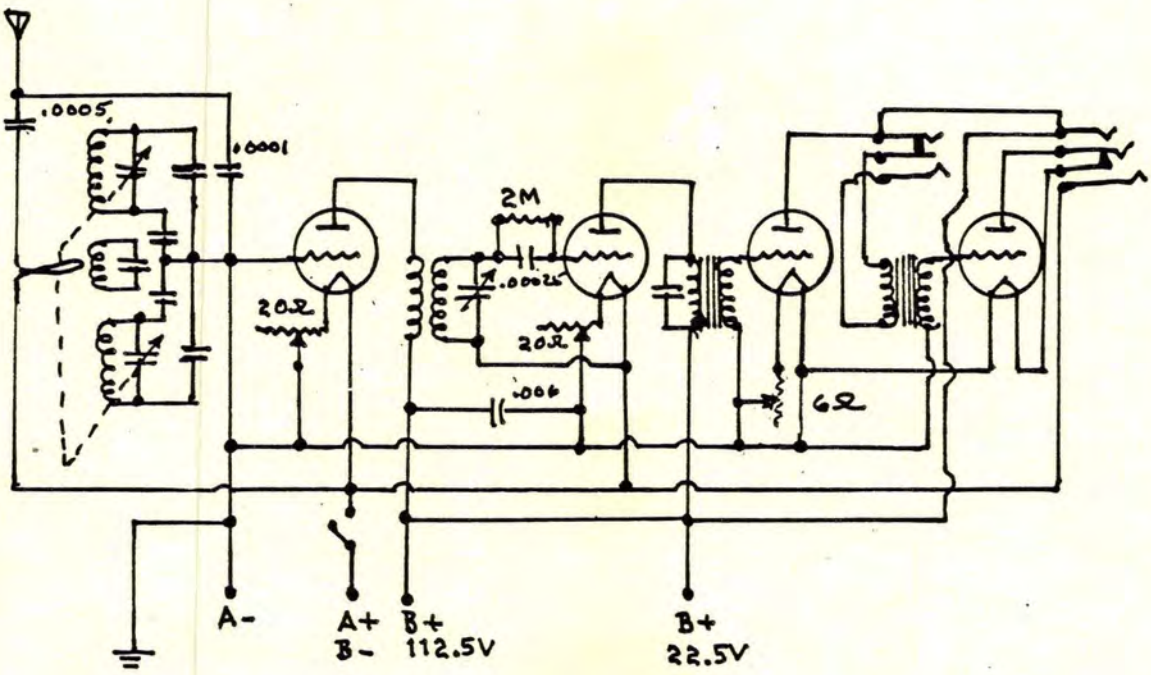

(RW 4.12.24)

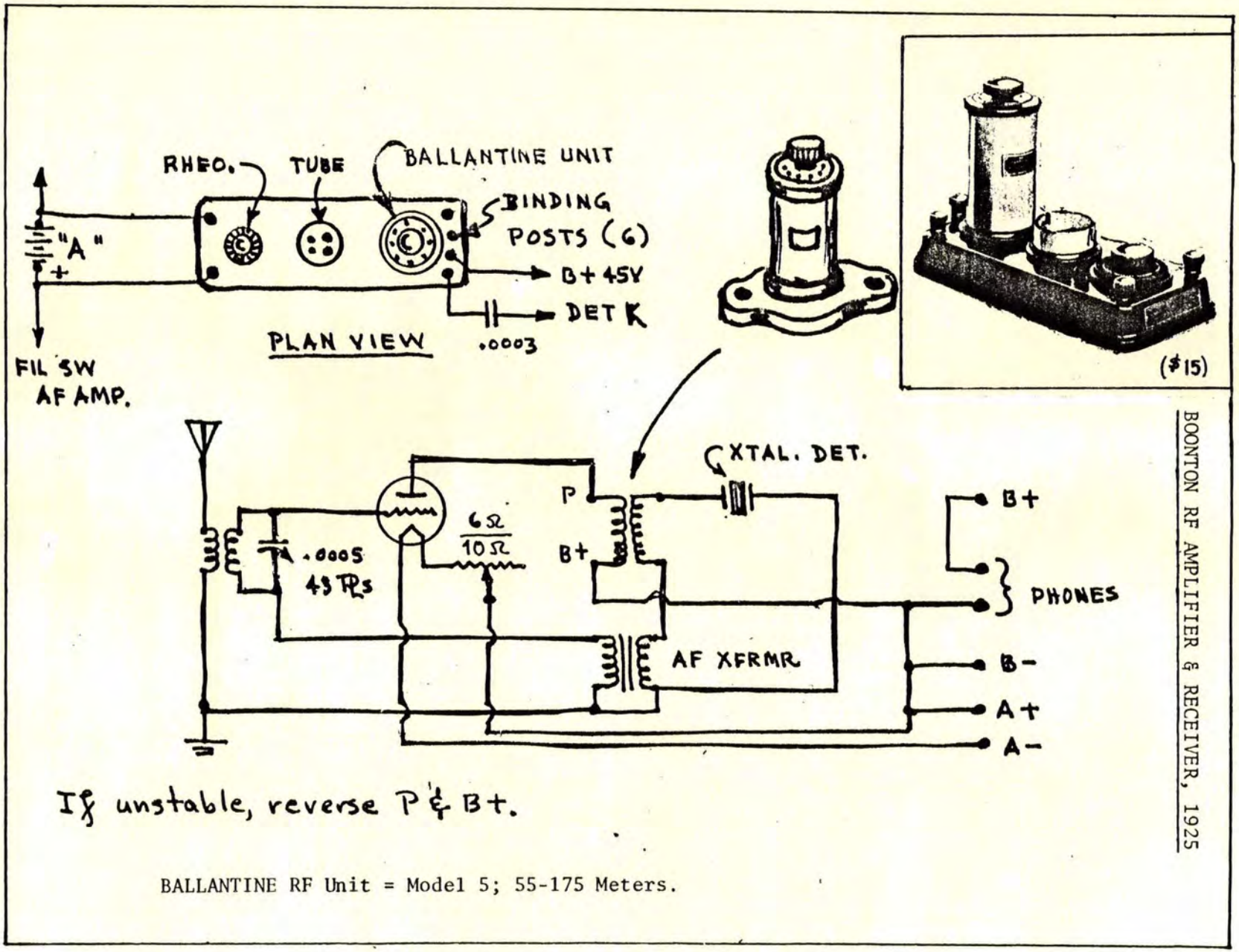

BOONTON RF AMPLIFIER & RECEIVER, 1925

BALLANTINE RF Unit = Model 5; 55-175 Meters.

BOSCH "AMBOROLA", MODEL 16, TRF:, 1926
(Sht. 1)

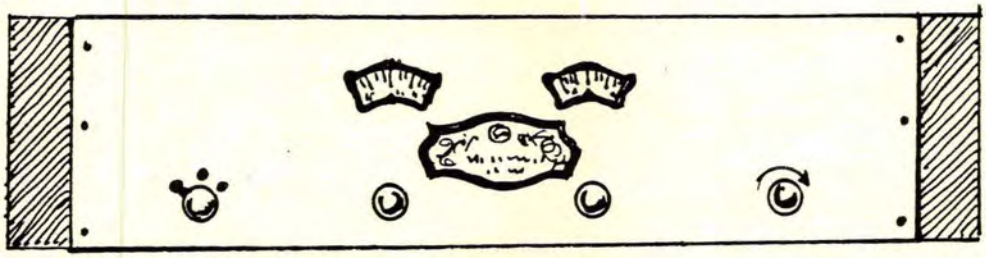

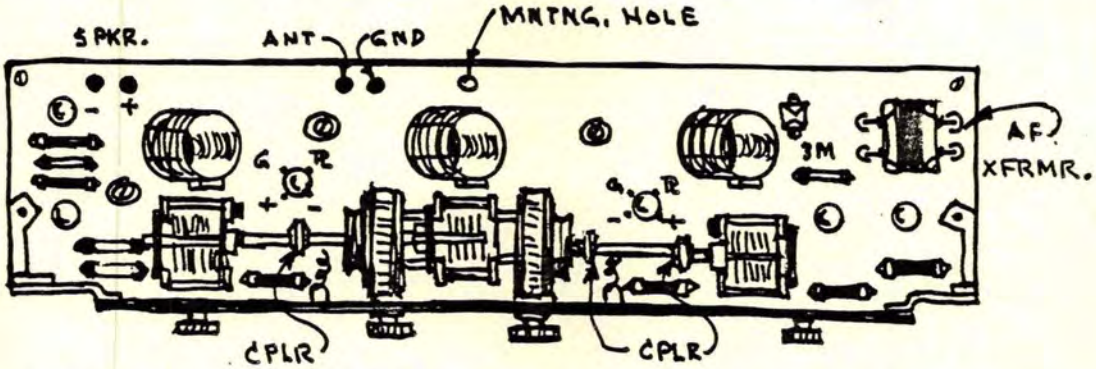

= TUBES(6) = 1A AMPERITES(6) = 50K Ω RESISTORS (3)
= PADDERS / TRIMMERS (Pots Under Chassis)
Note FIL Polarity Is Reversed Left to Right of ℄.

PLAN VIEW

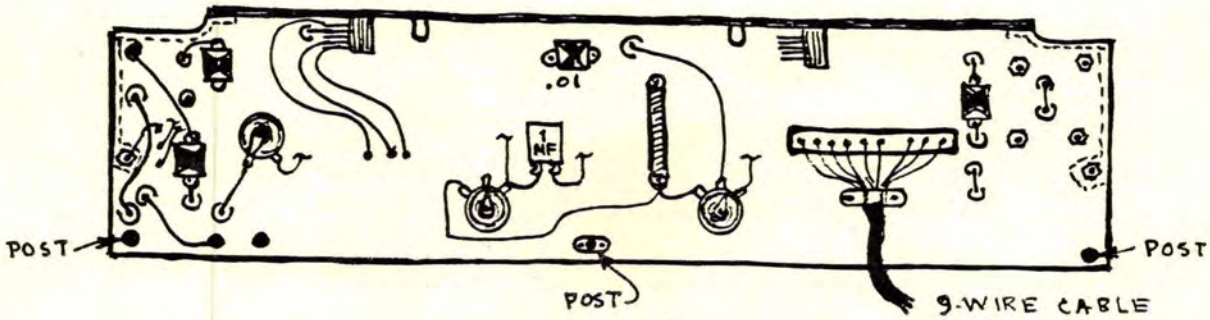

PARTIAL BOTTOM VIEW

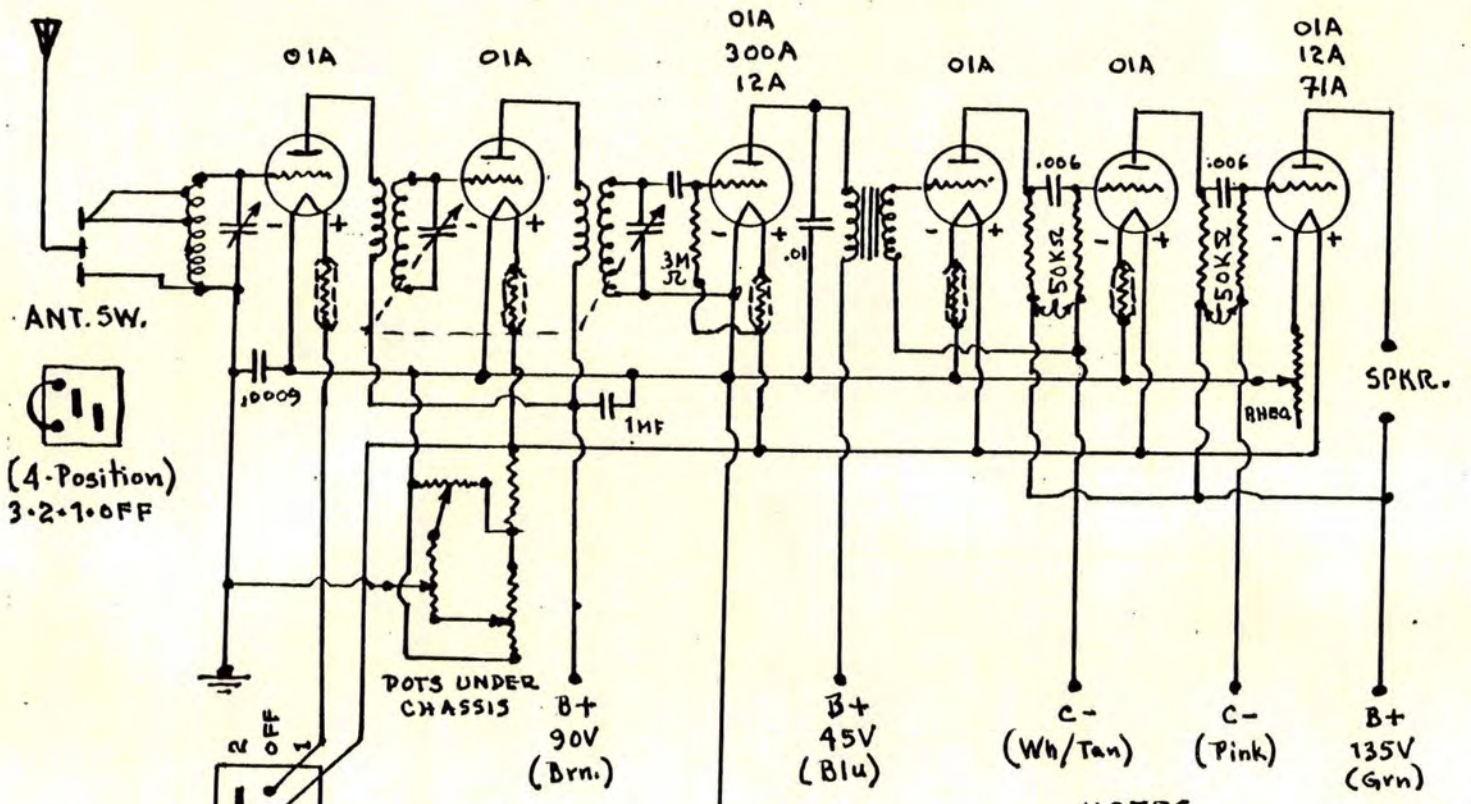

NOTES

1. Pots(3) under chassis trimmed & left @ best setting. Replace hole covers.
2. 9-Wire Cable Required.
3. Amperites change FIL legs after DET.
4. This schematic assumes you have an original BOSCH chassis, thus, no values are given.

BOSCH "AMBOROLA", MODEL 16;
6-TUBE TRF - (Sht. 2)

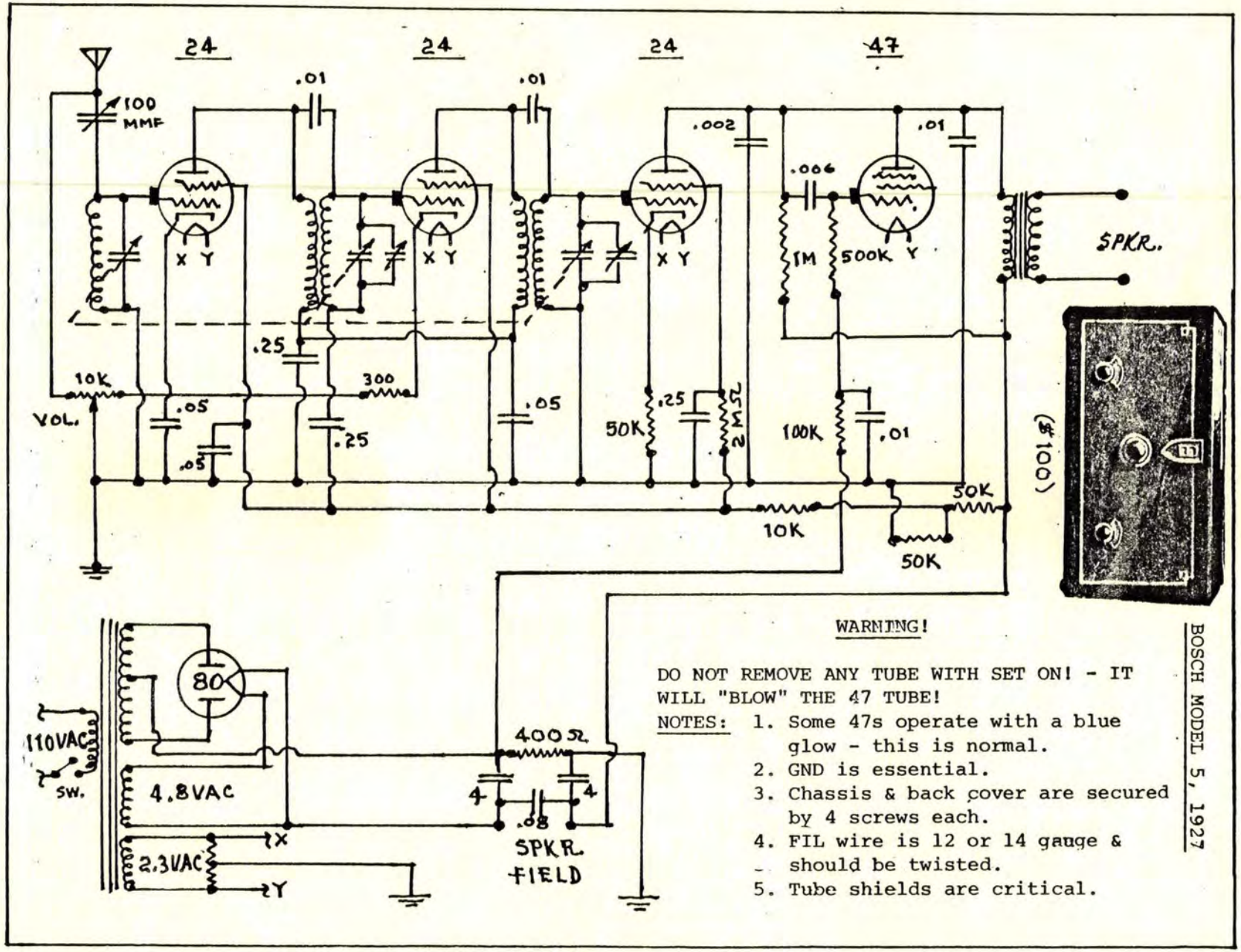

WARNING!

DO NOT REMOVE ANY TUBE WITH SET ON! - IT WILL "BLOW" THE 47 TUBE!

NOTES:
1. Some 47s operate with a blue glow - this is normal.
2. GND is essential.
3. Chassis & back cover are secured by 4 screws each.
4. FIL wire is 12 or 14 gauge & should be twisted.
5. Tube shields are critical.

BOSCH MODEL 5, 1927

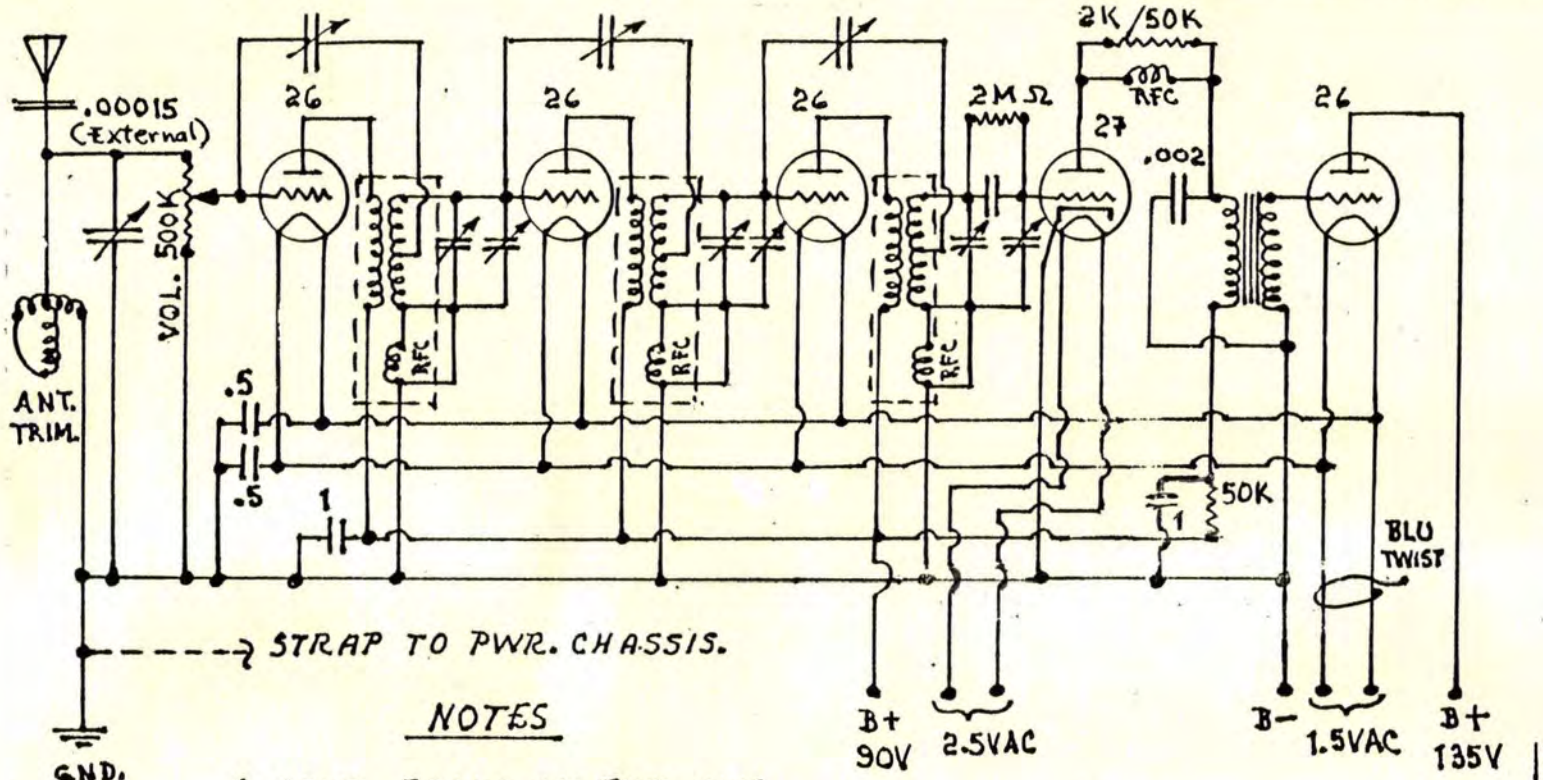

NOTES

1. SPKR. JACKS ON PWR. UNIT.
2. SEE VOL. IV FOR PWR. UNIT SCHEMATIC.
3. SEE SHT. 2 FOR ALIGNMENT PROCEDURES.
4. FIRST 3 RFCs SHOWN ARE IN RF COIL SHIELDS; RFC FROM 27 ℞ IS SEPERATE.

(CB 11-29) 5. GANGED VARIABLES (4).

BOSCH MODELS 28 & 29, 1929 (Sht. 1)

BALANCING RF STAGES: BOSCH MODELS 28 & 29, 1929; Sht.2

A modulated RF oscillator or a powerful local signal may be used.

1. Set station selector dial at approximately 40°.
2. Pick up signal and tune for maximum volume.
3. Set ANT variometer and VOL full on.
4. Remove 1st RF tube and replace with a good 26 tube from which one FIL prong has been removed. (Do not use a burned-out tube.)
5. If signal is heard, adjust nut of 1st RF balancing condenser with an insulated tool until no signal is heard.
6. Leave nut at point of minumum volume.
7. Balance 2nd and 3rd RF stages in exactly the same manner.

ALIGNMENT AFTER BALANCING:

Set can only be aligned after balancing. Simply adjust nut of the 2nd and 3rd RF alignment condenser, and the DET alignment condenser for maximum volume. The special balancing tube listed above is NOT to be employed here;-replace it with a good 26.

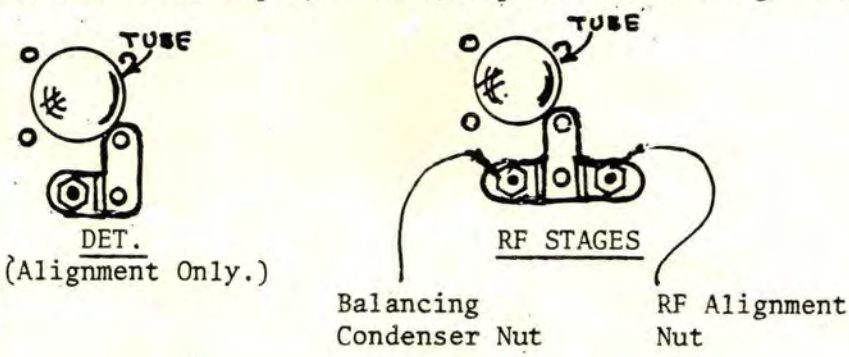

PLAN VIEWS

TROUBLE-SHOOTING:

1. Weak Reception; Distortion:	Open circuited 50K ohms DET plate resistor; replace.
2. Hum @ Resonance:	Out of balance; open supply line by-pass condenser.
3. Noisy Reception:	Noisy 50K plate resistor; noisy PRI winding of AF xfrmrs.; noisy VOL control.
4. Very Loud Hum:	Shorted RF bias resistor; may be shorted in one of the two condensers in series, with C.T. grounded.
5. Replacing VOL Control:	Centralab #3-72-102 of 25K ohms. Install at point of control, instead of original point. Ground metal cover on rere of new control to prevent oscillation. This installation does away with the control cable and pulley.
6. Fading; Intermittent:	Loose lug on 1st sexion of condenser stator; black lead from ANT variometer stator shorting to chassis at feed-through hole in chassis.

BRYANT "MAGISTER" 7-TUBE
SUPER-HET - 1929 (Sht.1)

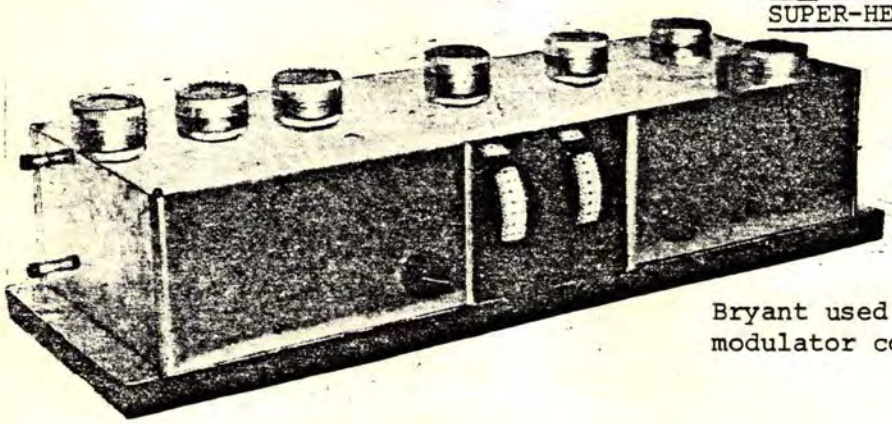

Bryant used the "Ultradyne" modulator concept of Lacault.

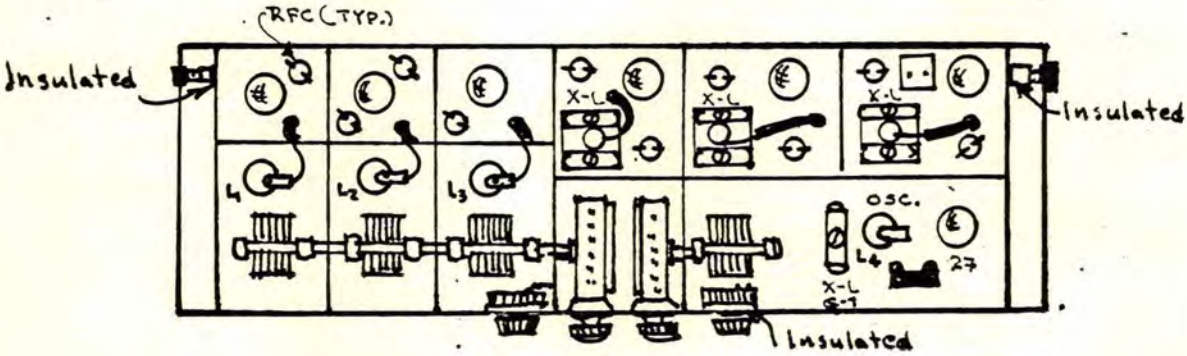

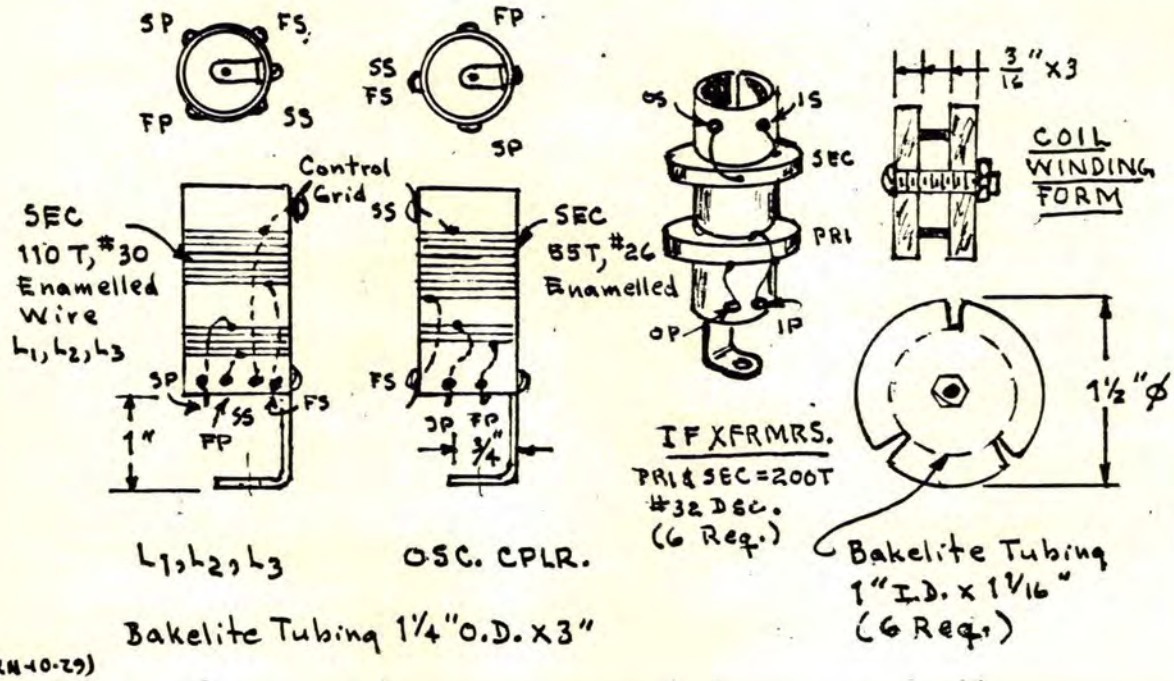

(RH-10-29)

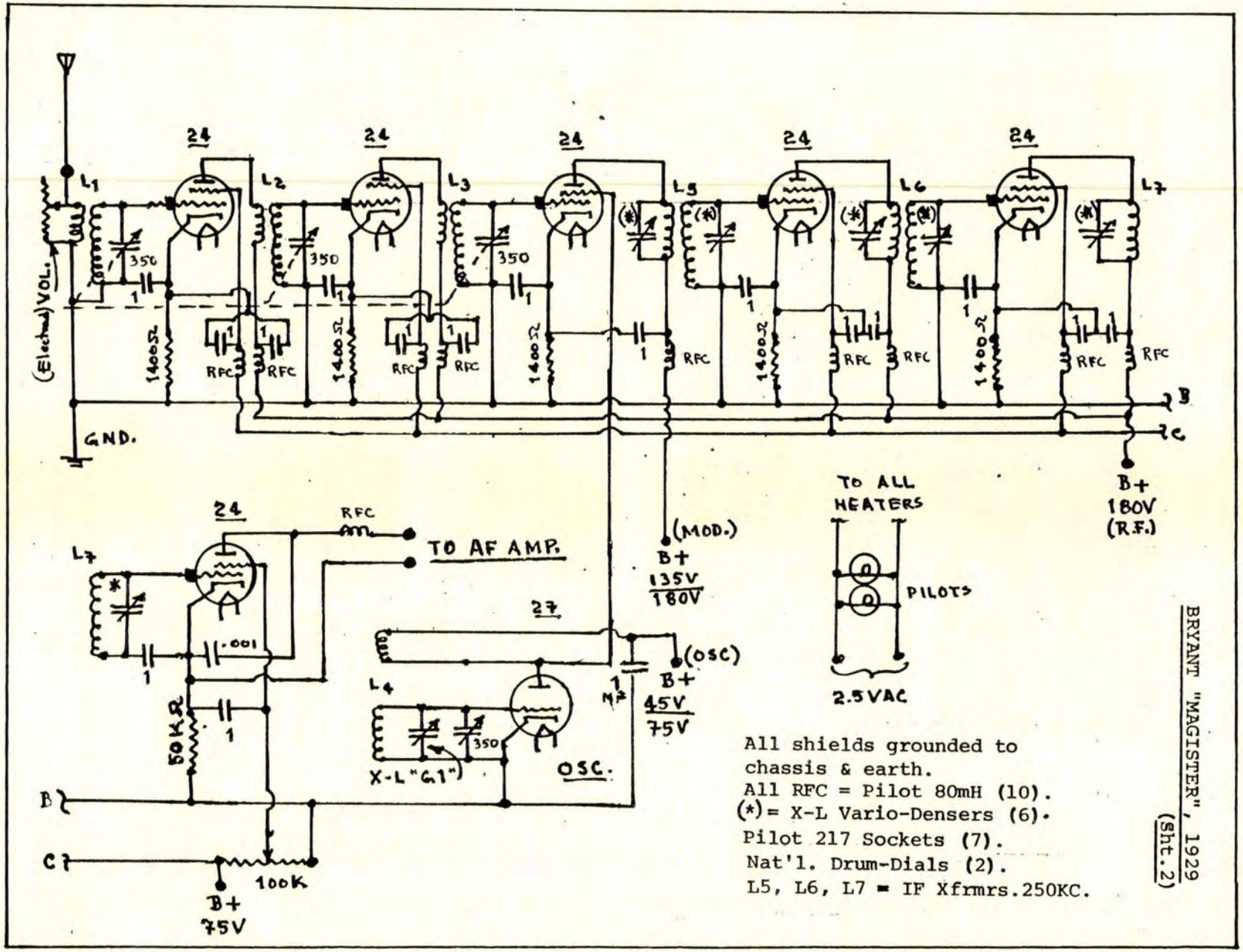
24
L1
L2
L3
L5
L6
L7
350
1400Ω
RFC
(Electrad) VOL.
GND.
B
C
B+
180V
(R.F.)
(MOD.)
B+
135V
180V
TO ALL
HEATERS
PILOTS
2.5VAC
27
L4
X-L "G1"
OSC.
(OSC)
B+
45V
75V
1 MΩ
TO AF AMP.
.001
50KΩ
100K
B+
75V
All shields grounded to
chassis & earth.
All RFC = Pilot 80mH (10).
(*) = X-L Vario-Densers (6).
Pilot 217 Sockets (7).
Nat'l. Drum-Dials (2).
L5, L6, L7 = IF Xfrmrs.250KC.
BRYANT "MAGISTER", 1929
(Sht.2)

BRUNOTROL/SIMPLETROL 5-TUBE TRF, 1927

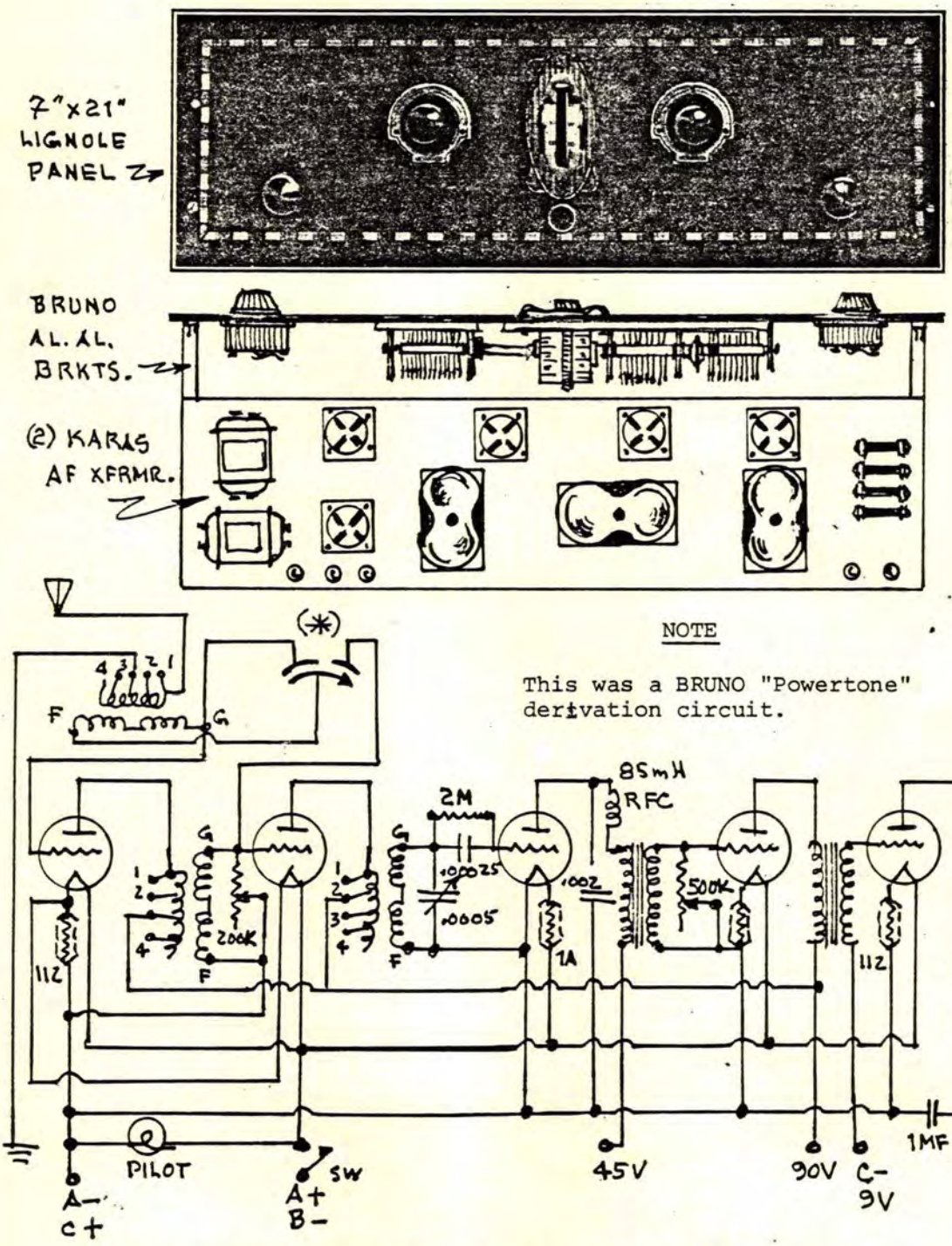

(*) = SIMPLETROL 3-GANG CONDENSER; .0005 EACH SEXION.
GEN-WIN BINOCULAR COILS (3); OR EQUAL.

BRUNO "77" WONDER SET; 1925; $23 for Kit

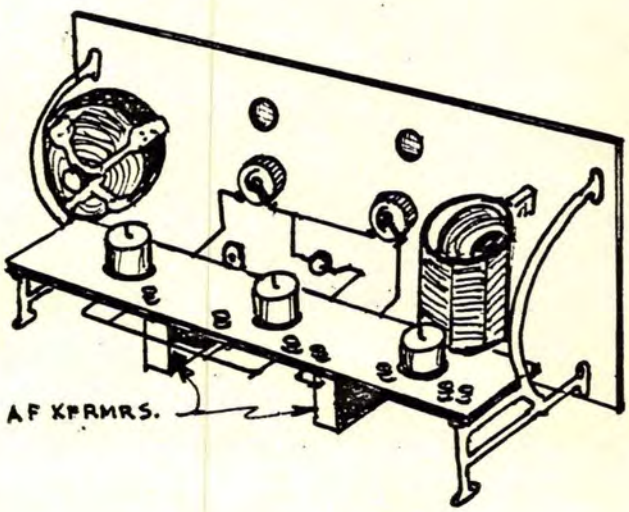

7"x18" PANEL
SUB-PANEL BRKTS. (*)
"77" TUNER (*)
#18 VARIO-COND. (*)
20 Ω RHEOSTAT
10 Ω RHEOSTAT
SINGLE & DOUBLE JACKS
.001 MFD FIXED COND.
.00025 MFD " "
2M Ω GRID-LEAK
FIL. SW.
4" DIALS (2) (*)

(*) = BRUNO PARTS

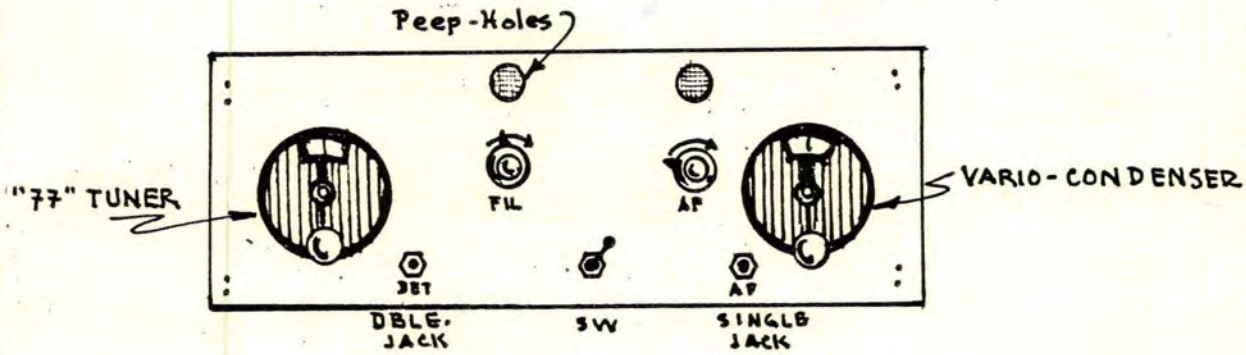

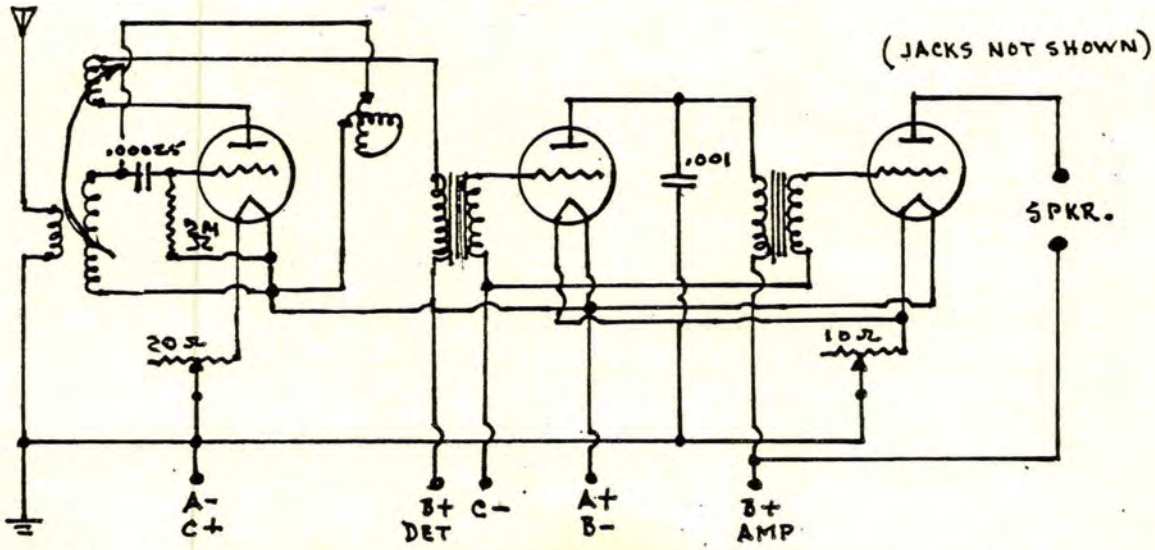

B-S-T 6 TRF RCVR., 1926 ($40)

PANEL

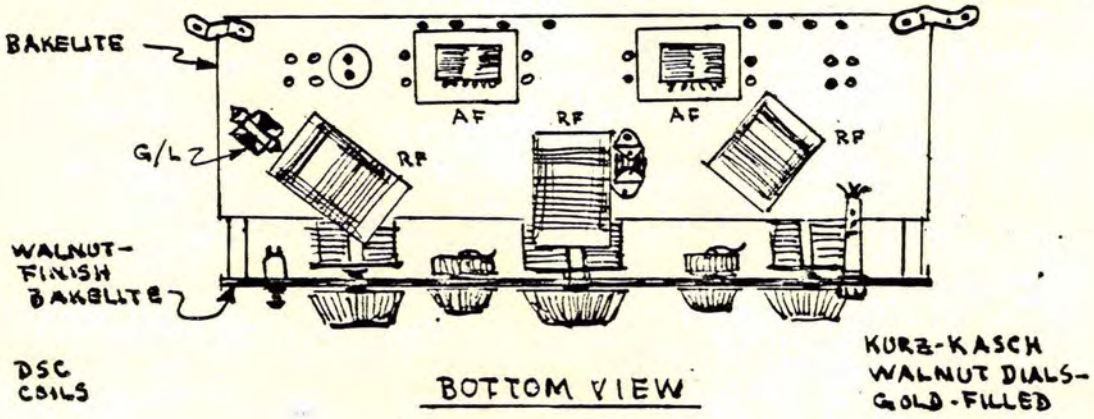

BOTTOM VIEW

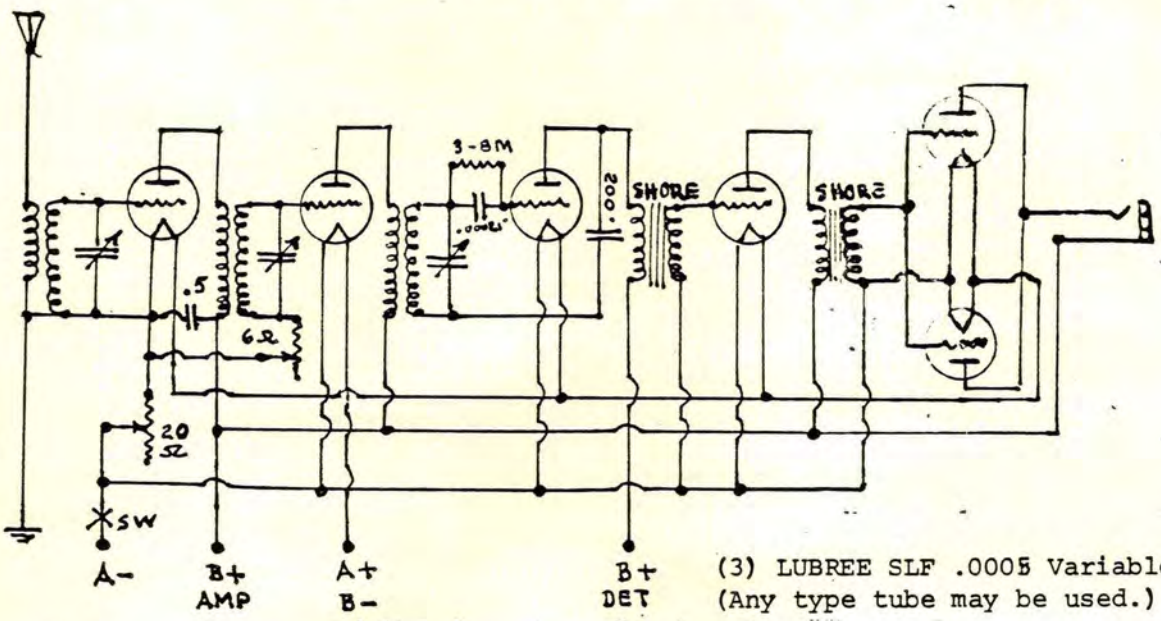

(3) LUBREE SLF .0005 Variables.
(Any type tube may be used.)

THE CALLIES SUPER-HET of 1926; Sht. 1

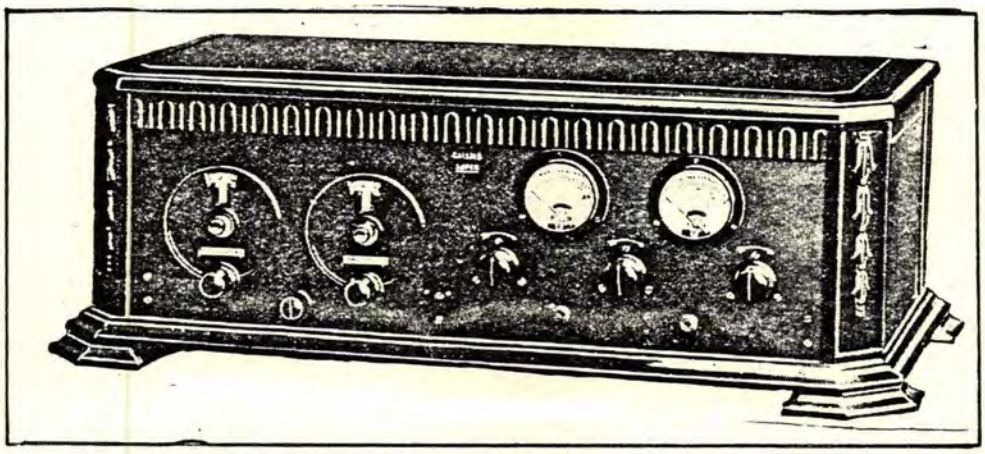

During the mid-Twenties there was a veritable niagara of super-het circuits offered the home-constructor through his radio media, some good, some different simply for the sake of being different. The super-het depicted here was one of the simplest to construct, and the results were quite satisfactory. In fact, it offered a remarkable tonal range for the time. If you've ever played with the notion of having a go at constructing one of the early super-hets, this one would be a good one to start with. It enjoyed a good popularity for about three years. Like all circuitry of the period. comparable parts may be substituted for those specified, although it naturally follows that original parts would be best. Refer to Sheet 2 for the conventional schematic.

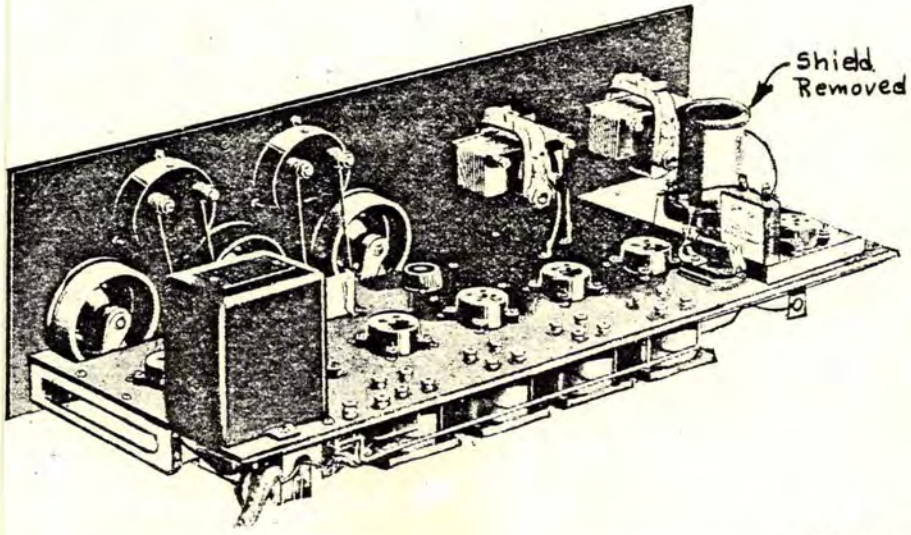

(CB F-26)

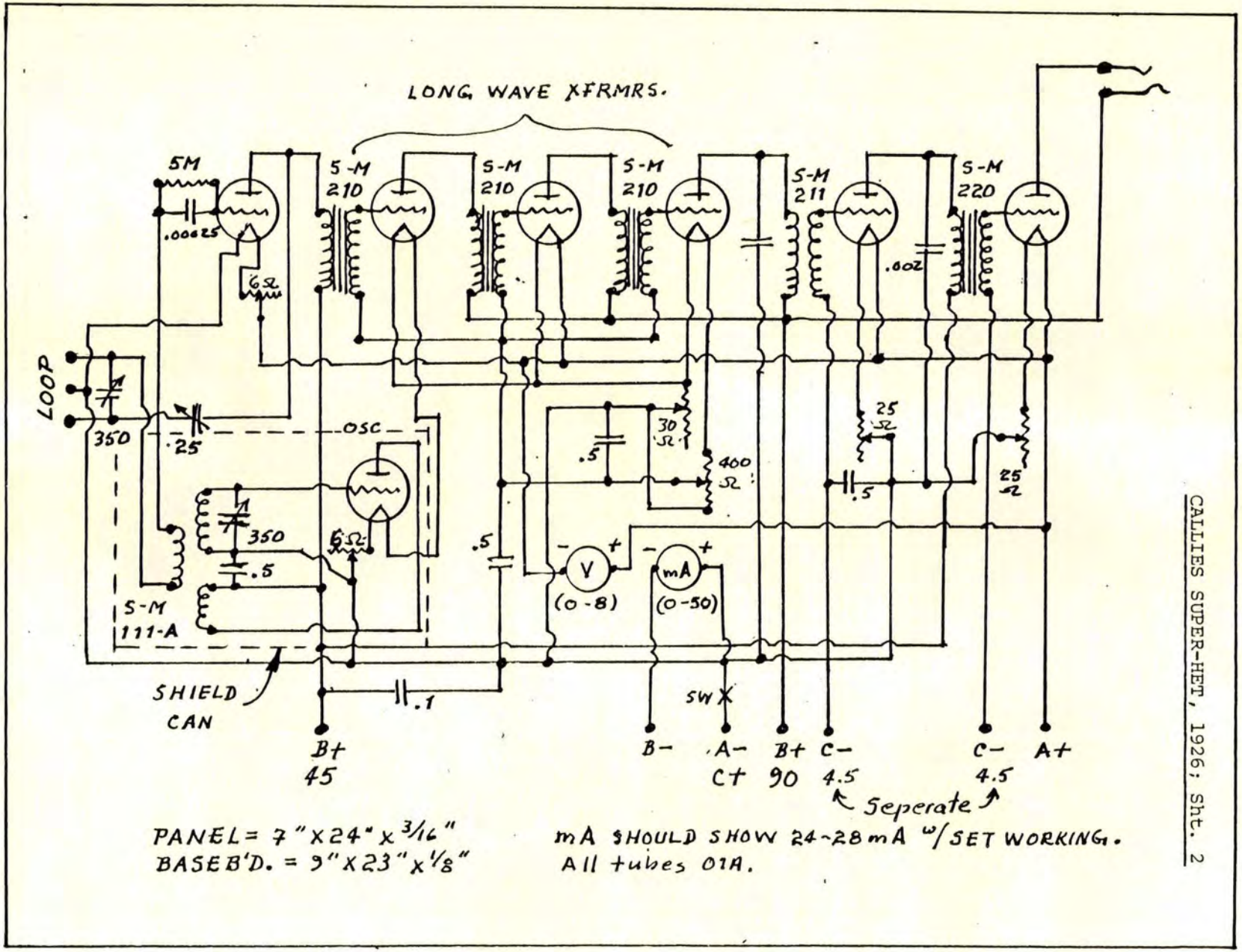

CALLIES SUPER-HET, 1926; Sht. 2

CAMFIELD SUPER-9 SUPER-HET, 1927; Sht. 1

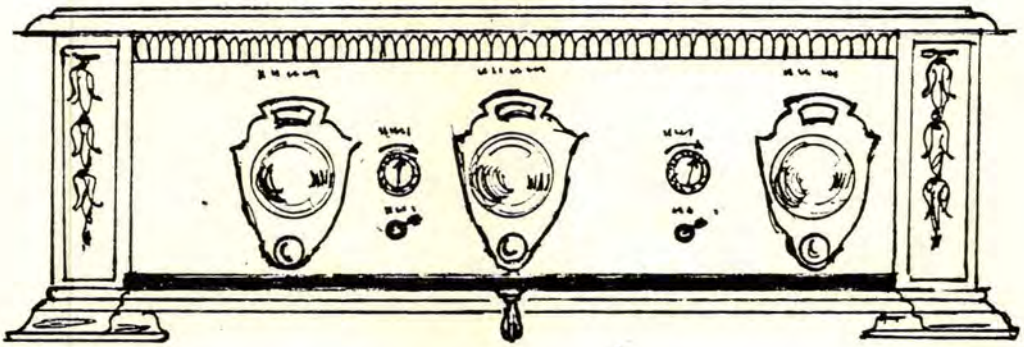

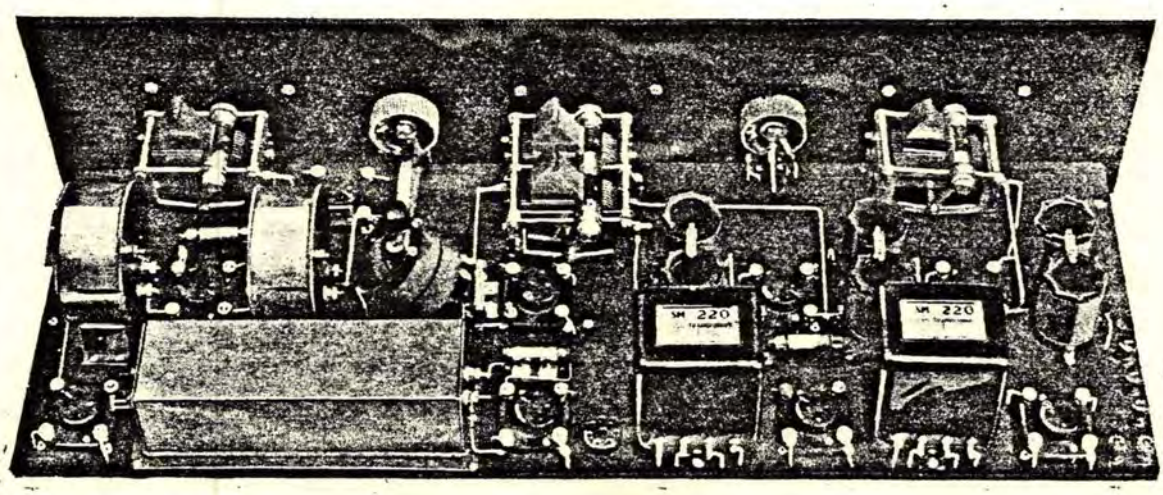

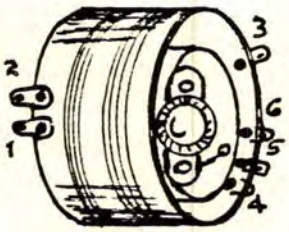

OSC. COIL
(#620 REMLER)
(CAMFIELD Same)

$117.40 KIT
(CB·3·27)

PANEL = 7"x30". BASE = 10"X29"x 3/16"
CAMFIELD #251 250 mmf VARIABLE.
" #351 350 mmf "
" #352 350 mmf "
" #22K KIT (3 "Duoformers").
REMLER #620 CPLNG. UNIT.
RUSCO 10KC BAND-PASS FILTER.
" 95KC IF XFRMRS. (2).
S-M #220 AF XFRMRS. (2).
K-K #592 DIALS (3).
KARAS SUB-PANEL BRKTS. (3)
JONES B.M. SUB-PANEL PLUG.
4-A AMPERITE (2).

CAMFIELD SUPER-9 SUPER-HET, 1927; Sht.2

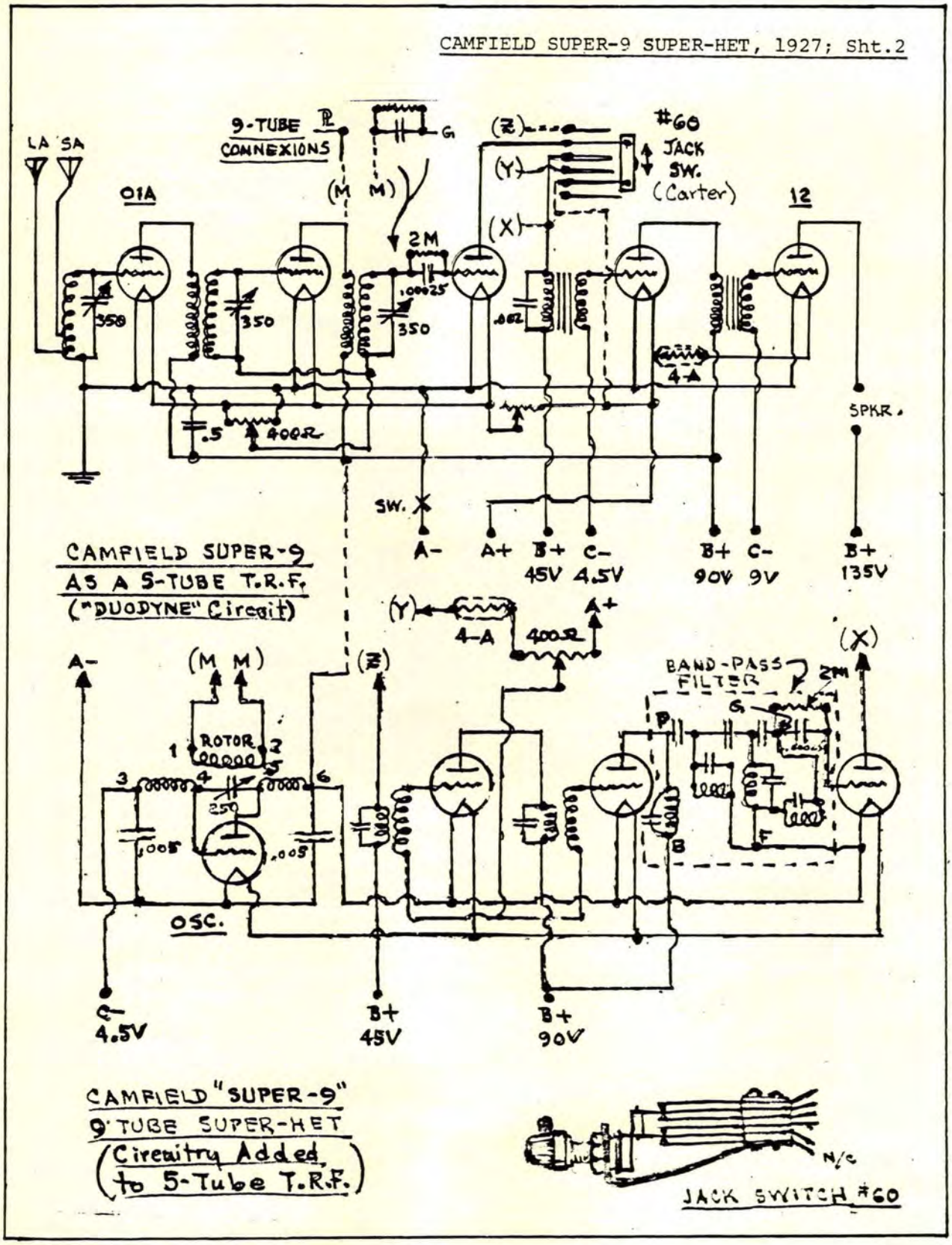

CAPACITY-CONTROLLED REGENERATIVE, 1926

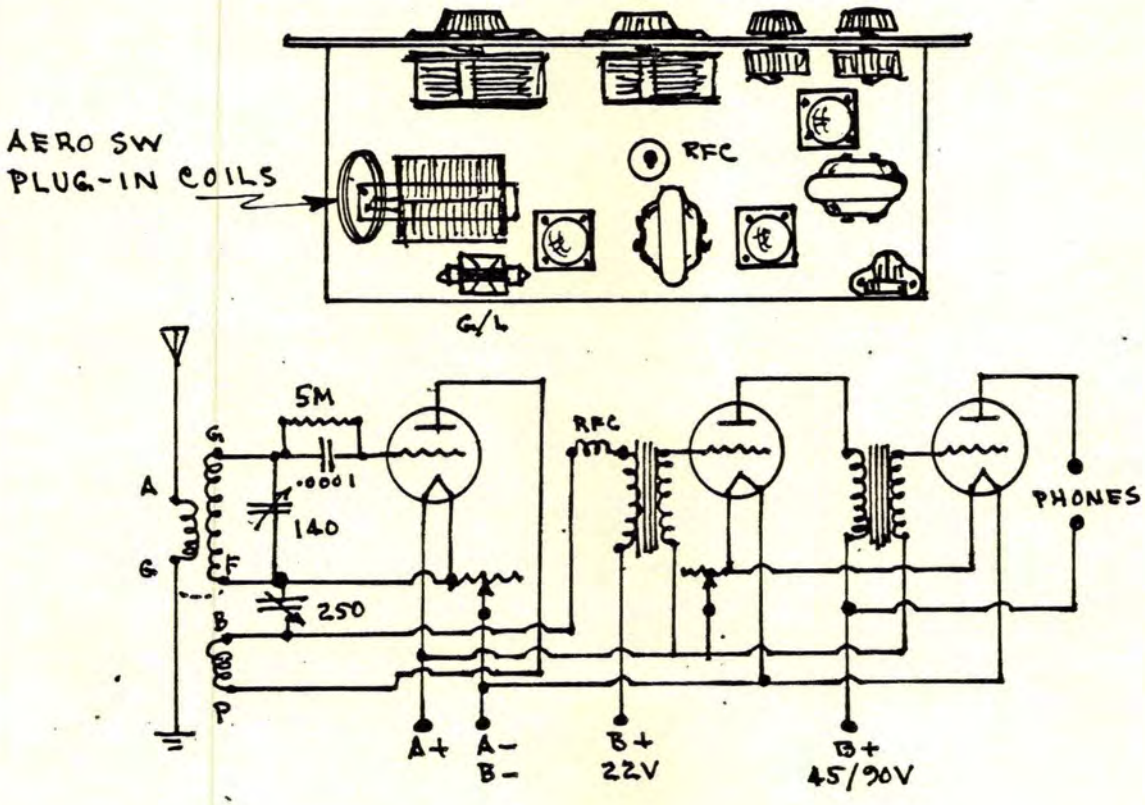

NOTES:

From the standpoint of response only, one regenerative circuit is as good as another. Whether you use tuned-plate, tickler-feedback, inductive-capacity-feed-back, throttle-control, the signal strength at the source remains the same. The above circuit is simple to construct, is stable in operation, and regeneration is smooth.

While most any type of SW coils may be used, you will find that best results are secured from the use of AERO SW coils, horizontal-mount.

CELCO "D"-COIL 7-TUBE SUPER-HET, 1925; Sht. 1 of 2

The following sketches and notes derive from the CELCO "D"-coil-equipt receiver designed by Harry J. Marx in 1925, and first presented in the July, 1925, issue of Radio Journal.

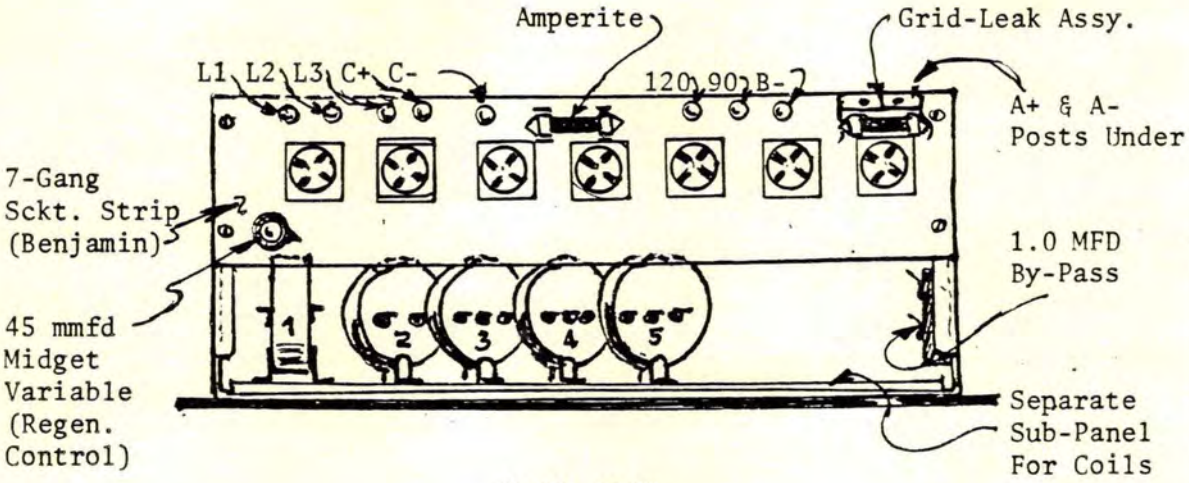

PLAN VIEW

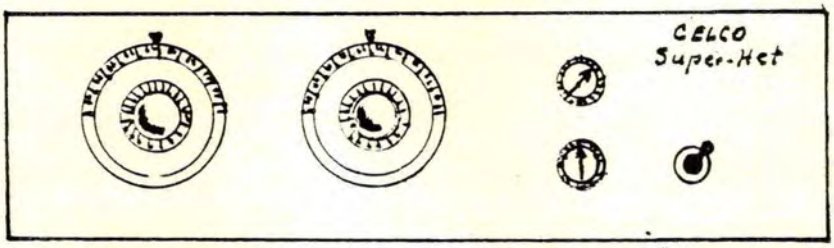

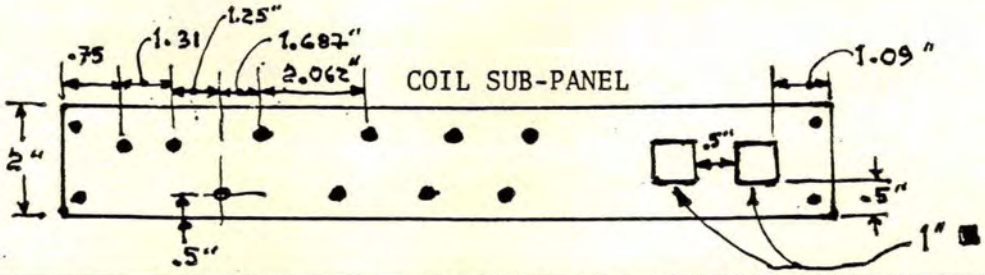

CELCO "D"-COIL SUPER-HET, 1925; Sht.2

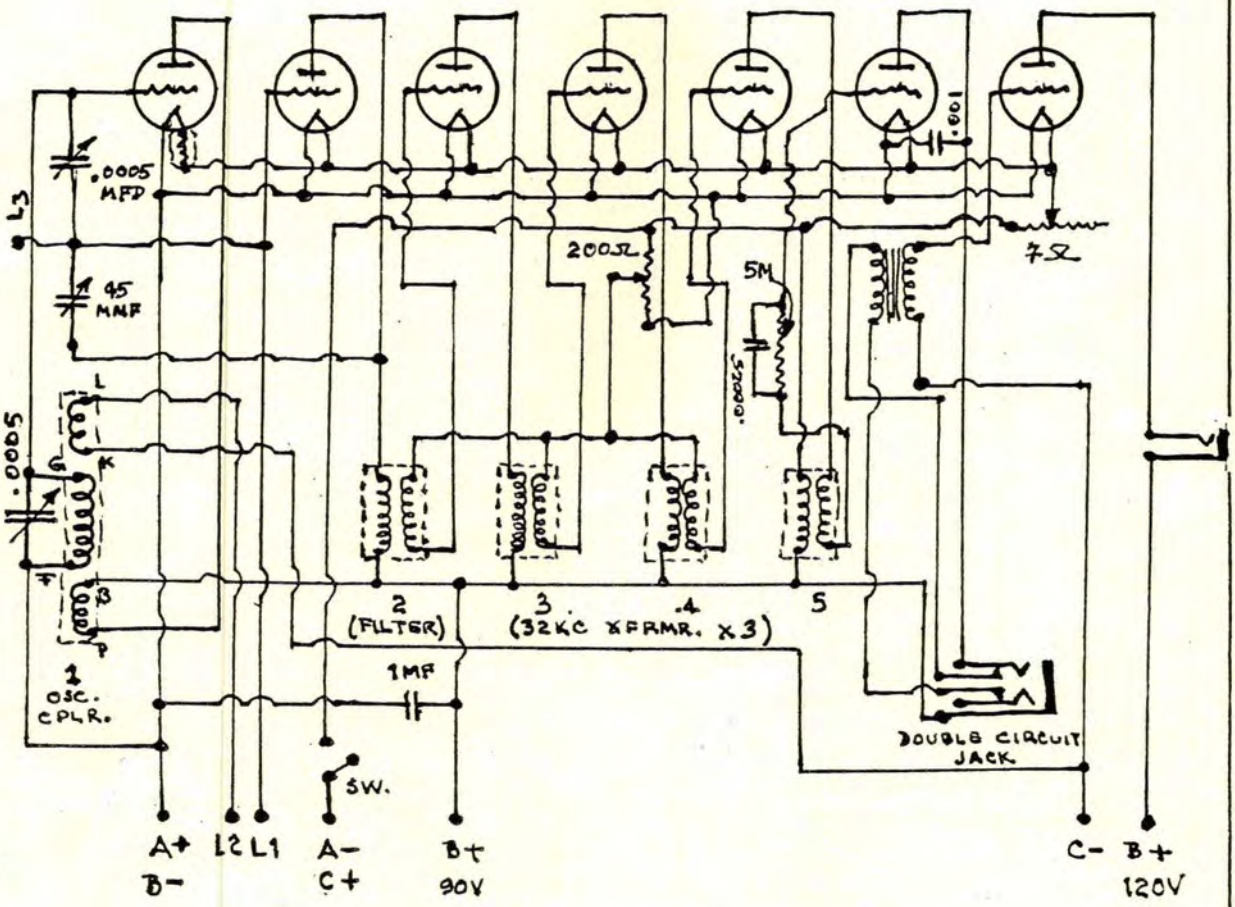

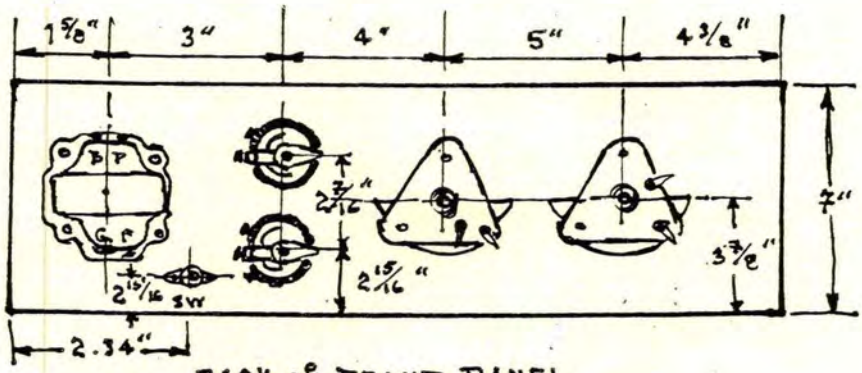

BACK & FRONT PANEL

PANEL = 7" x 18" x 3/16"
BENJAMIN SUB-PANEL BRACKETS.

AF XFRMRS. = Rauland "Lyric"

CISIN's "DOUBLE-SHIELD" 4-TUBE PORTABLE, 1928;Sht.1

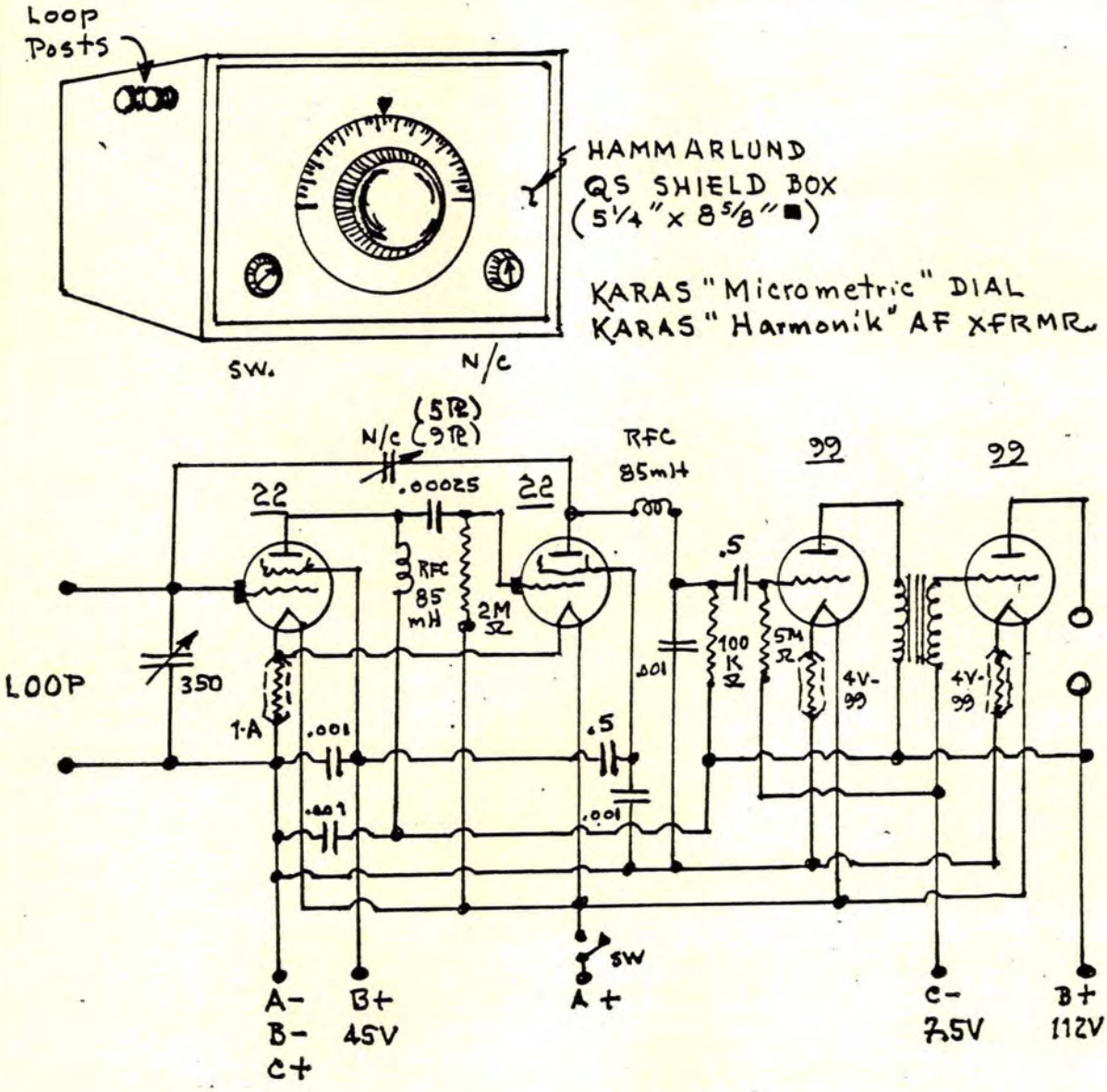

NOTES:
1. Comparable parts may be substituted.
2. Batteries were installed in a seperate QS shield box.
3. Note that Amperite is for 99 tubes (2).
4. Use of an .001 MFD fixed condenser is optional.
Total weight with batteries = 20#.
5. Set can be constructed in a couple of hours.

(RW 6-23-28)

CISIN DOUBLE-SHIELD 4-TUBE PORTABLE, 1928; Sht. 2

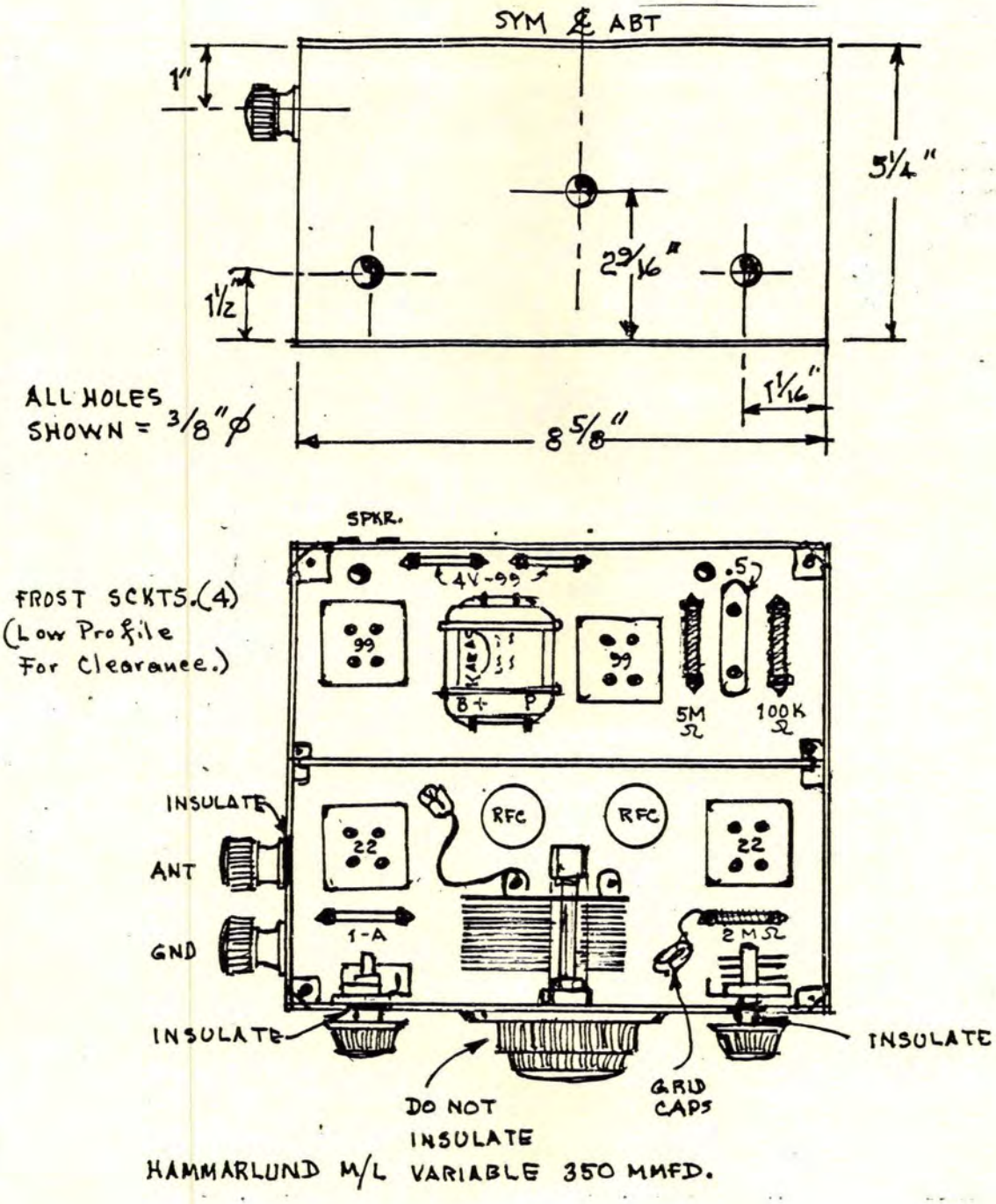

NOTE:
While this set was called a "portable", both units were meant to be packed in a suitcase for "porting" to a vacation site.

CLARK "SUPER-OCTETTE" SUPER-HET; 1925; 1

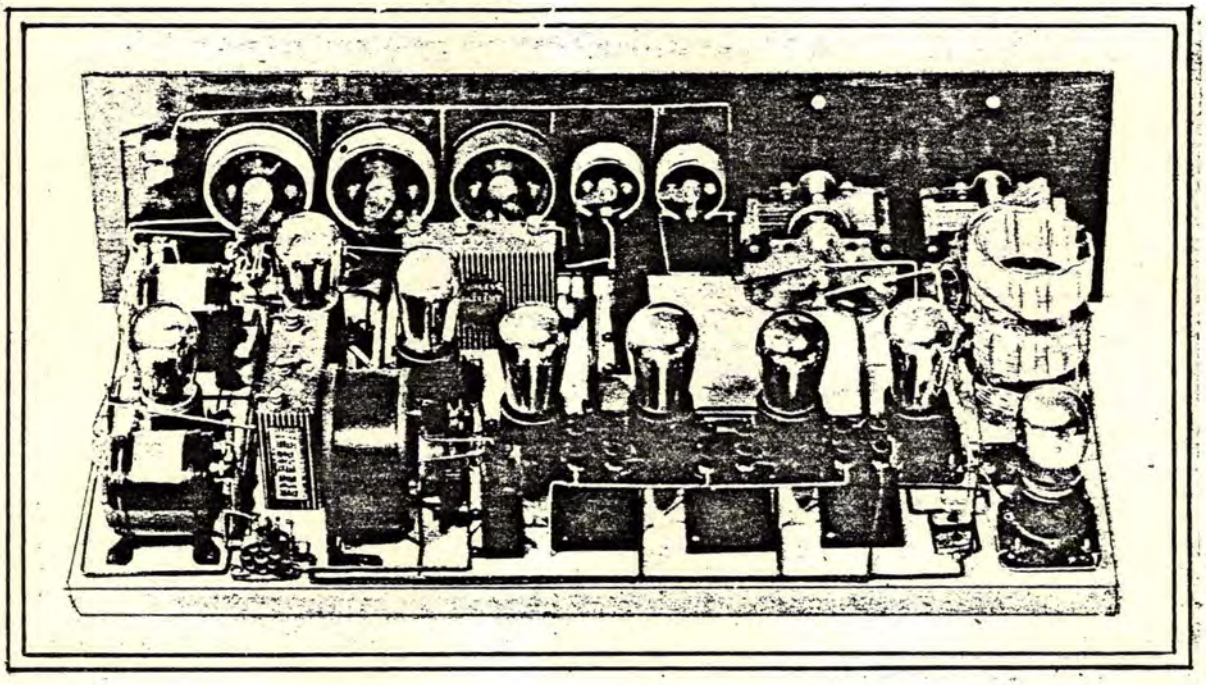

The super-het was frequently referred to in early media as the aristocrat of radio, and there were those who firmly believed it. Of all the early circuits which were constantly being picked at, with the hope of "improving" the basic circuit, none were picked at more diligently than the super-het circuitry. There were more "orphan" super-hets in the late Twenties than any other circuit, and you will find quite a few in these Sketch-Books - and all are worthwhile not only as a challenge to you, but the sheer adventure of putting together what appears to be primitive radio, and having it work. The super-het here depicted was by E. Clark, of Philadelphia, in collaboration with Neeley, publisher of Radio In The Home, also of Philadelphia. Comparable parts of later vintage may be substituted, but the results will probably startle you - the bloody things worked!

* * *
* *
*

(RH 12·25)

Original Cost of Parts = $200 (Gold Std.)

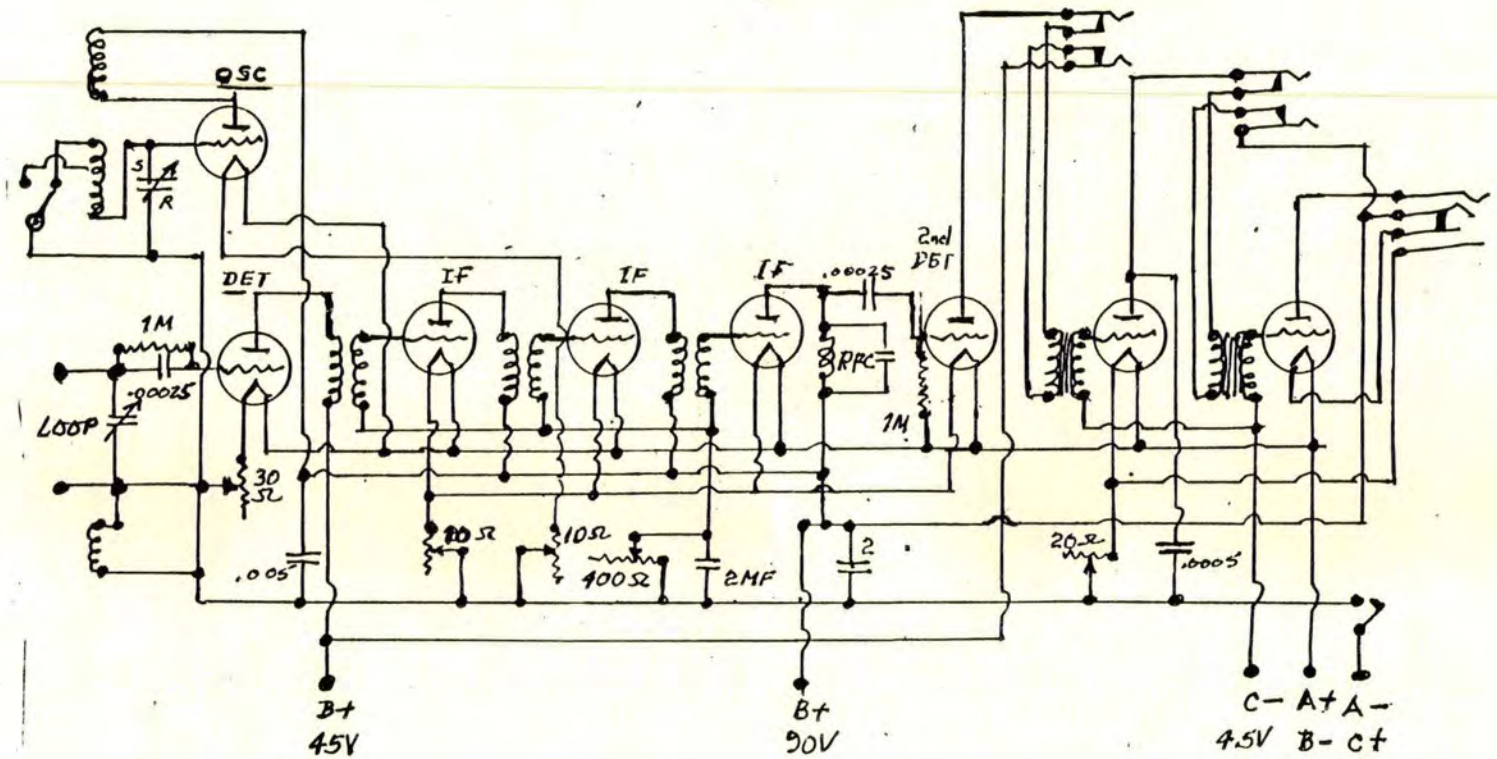

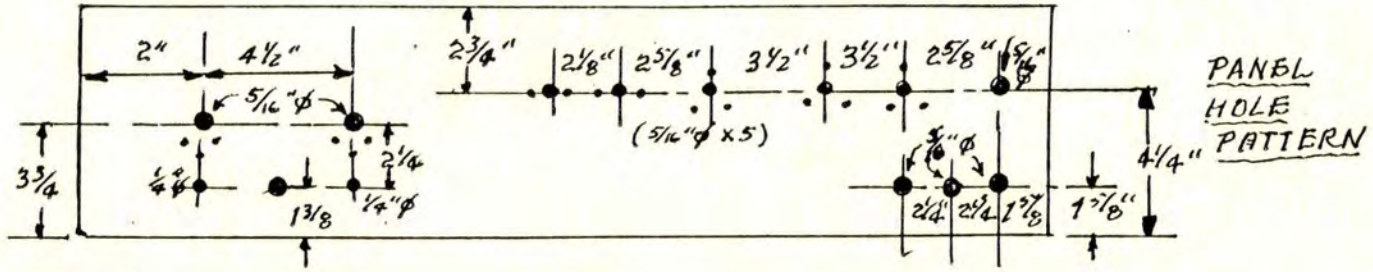

PANEL HOLE PATTERN

CLARK "SUPER-OCTETTE" SUPER-HET, 1925;2

CLARK "SUPER-OCTEETE" SUPER-HET, 1925; 3

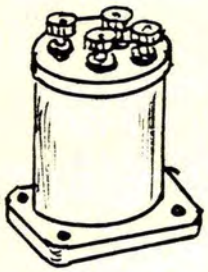

50 KC. HETEROFORMERS (3 Req. - $7.50)

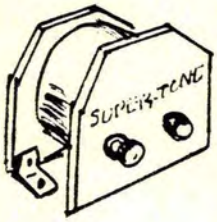

"SUPER-TONE" RF FILTER & CHOKE ($8)

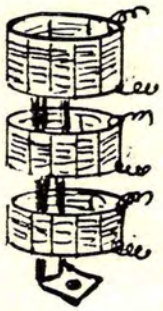

"SUPER-TONE" COUPLER (OSC.) ($5)

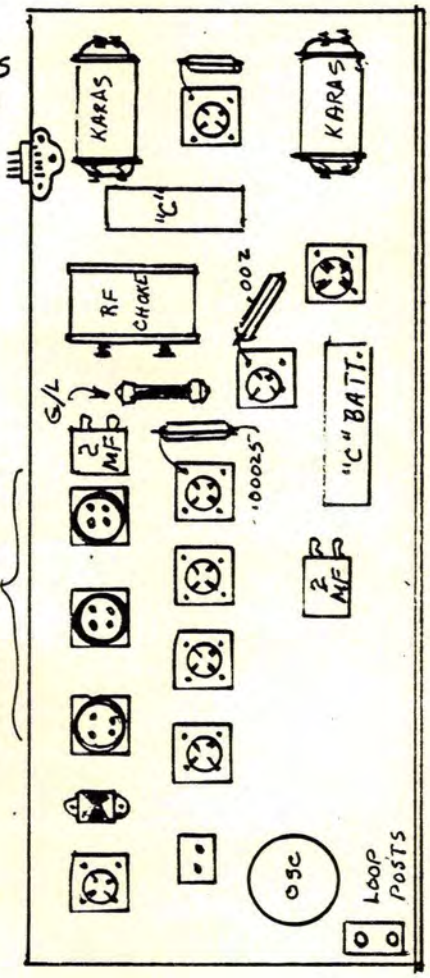

BASEBOARD LAYOUT

Panel = 7" x 26", Micarta, Mahogny Finish.
Baseboard = 11½" x 24½", Oak.
(2) G.R. Silver Dials.
(2) Double Circuit Jacks.
(2) Hammarlund .0005 Variables.
(2) Karas "Harmonik" AF Xfrmrs.
FIL Control Jack.
(2) .00025 MFD Condensers.
(1 ea.) .005; ,002; .0005 MFD.
FIL Switch.
(2) Phone Jacks.
(8) Benjamin Sockets.
(2) 20-ohm Resistors.
(1 ea.) 400-ohm; 30-ohm; 10-ohm.
(2) 2 MFD Condensers.

COCKADAY 4-CIRCUIT REGENERATIVE TUNER (Sht. 1)

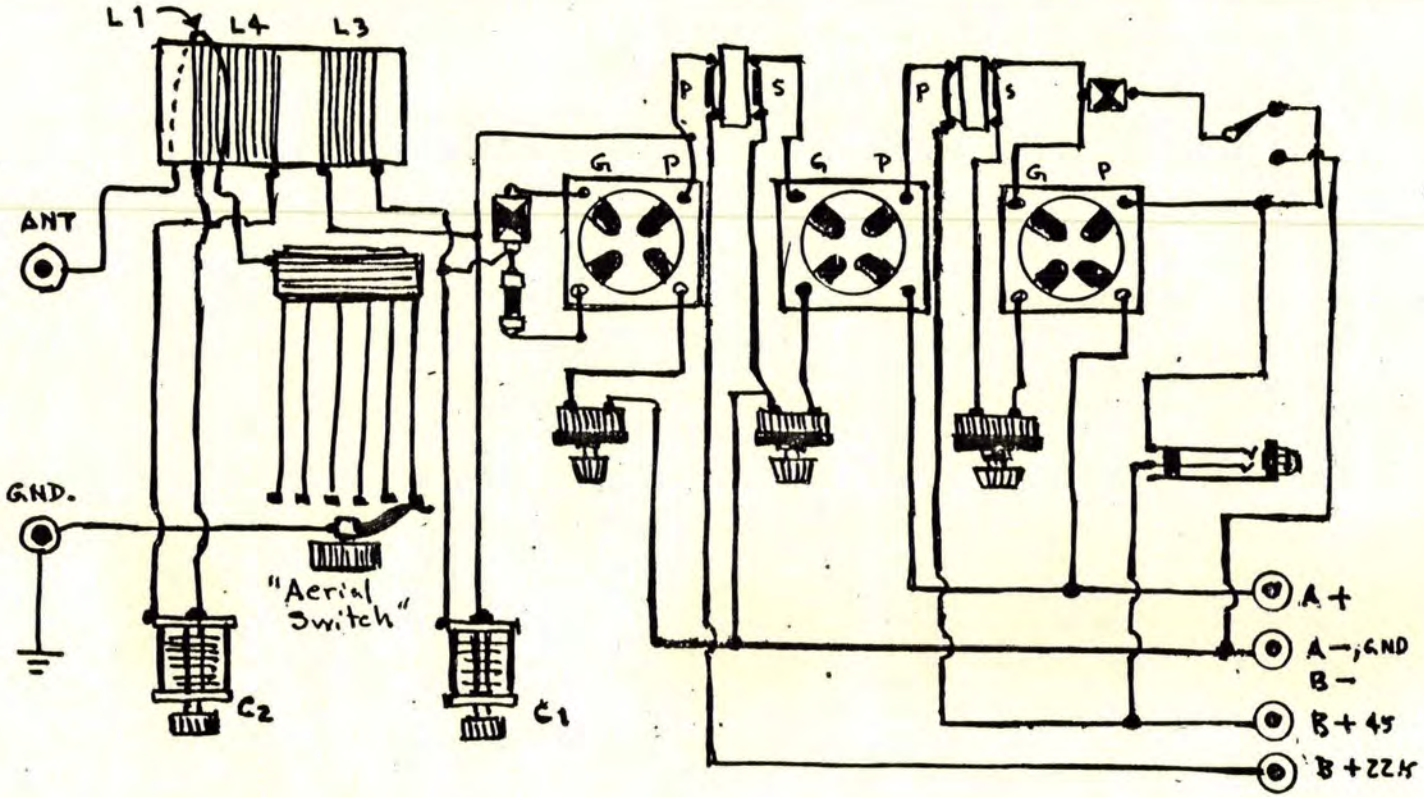

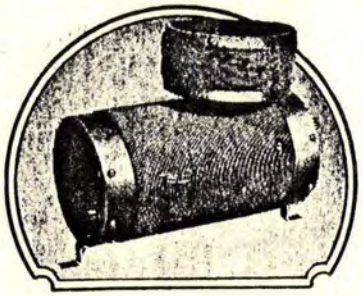

(1925 - $5)

The Peculiar "Precision" Cockaday Coil That Enjoyed Popularity For About One Year.

NOTES:

1. Secondary circuits tuned by variables.
2. Regeneration controlled by C2, so that dial setting is approximately 90°.
3. FIL control increased to just below osc.
4. Adjust C1 for correct wavelength.
5. Coil atop the Cockaday coil connected to the "Aerial Switch"; six taps on coil and switch.

COCKADAY 4-CIRCUIT REGENERATIVE TUNER, (1923) (Sht. 2)

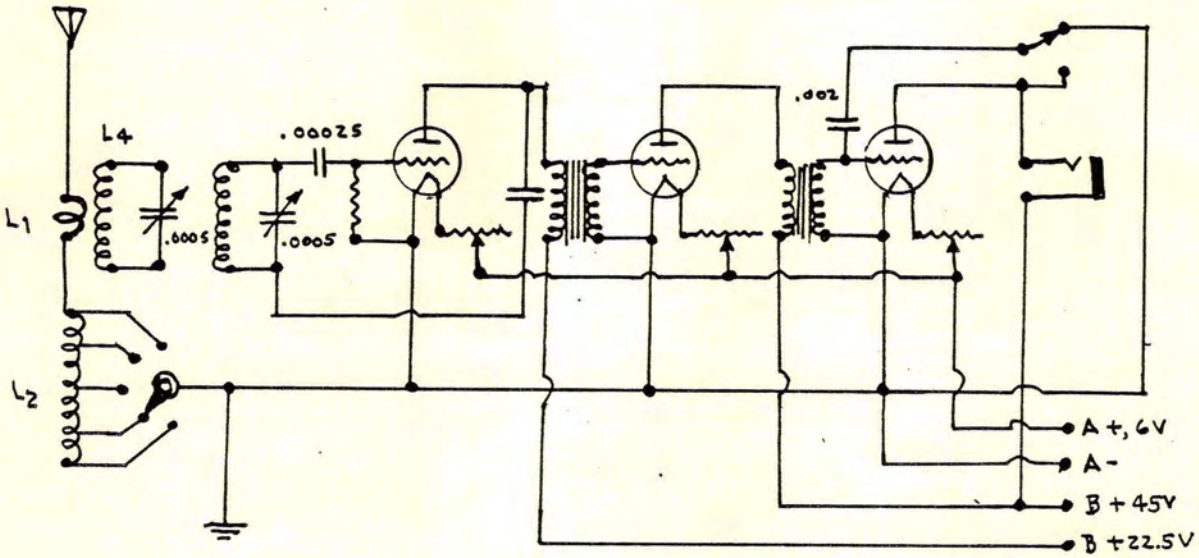

COIL DATA

Coil Form = 5.375" x 3¼" Ø for L1, L3, L4.
1.375" x 3¼" Ø for L2.

L1 = One turn, ¼" from L4.

L2 = 43 Turns, tapt at 3,7,13,21,31; bank-wound; separate form for PRI.

L3 = 65 Turns, #18 SCC, ¼" from L4, in same direction. (This was called a "Stabilizer Coil".)

L4 = 34 Turns, #18 SCC - SEC coil.

(R 10-23)

COCKADAY 8 TUBE SUPER-HET REFLEX
(1925) Sht. 1)

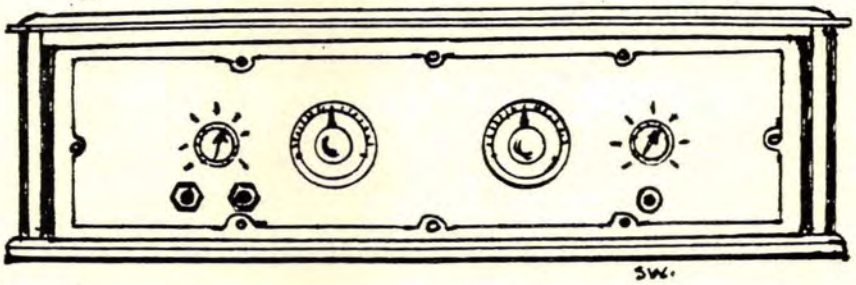

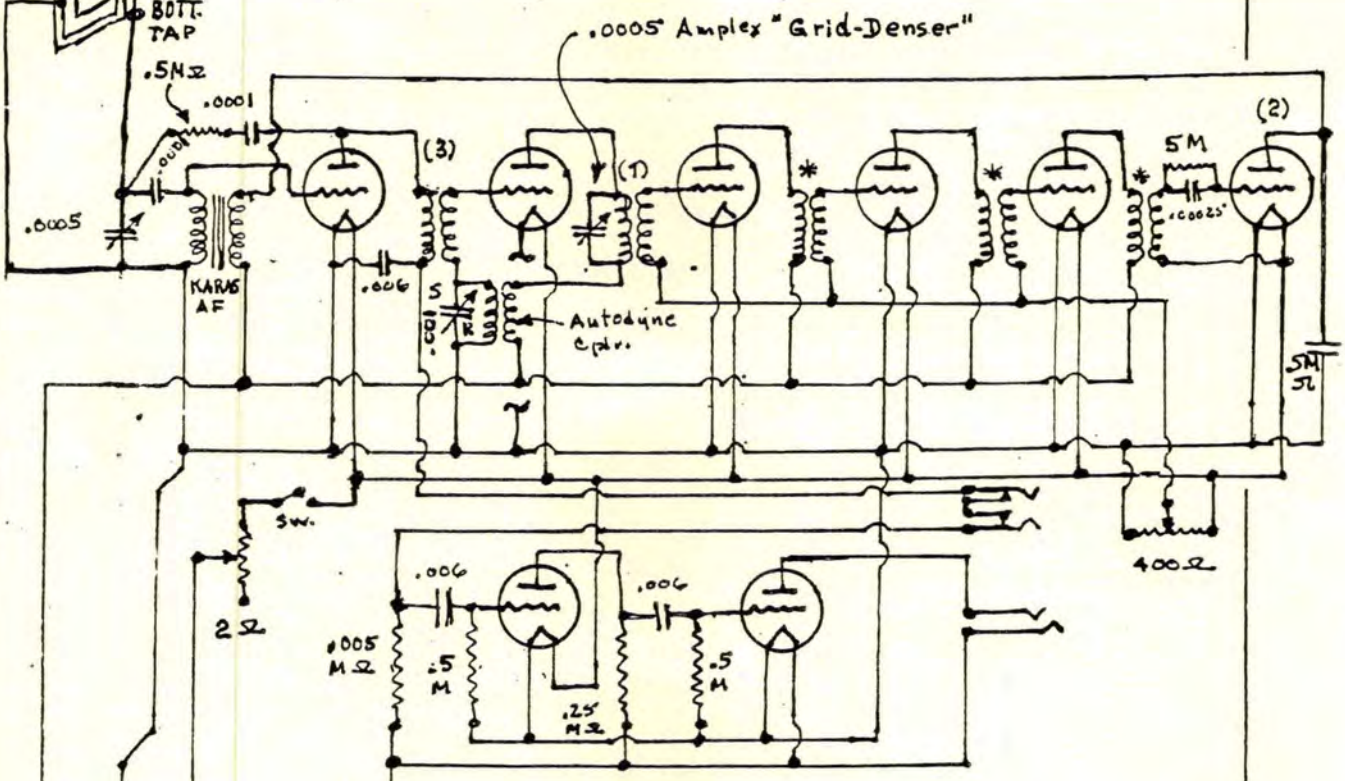

Panel = 7" x 24" x 3/16" (7) Binding Posts
Sub-Panel = 9" x 23" x ½"
Connexion Block = 1" x 9" x 3/16"
(*) = Haynes=Griffin IF transformers
(1) Haynes-Griffin Input transformer
Daven R-C mountings (2)
(2) Benjamin Cle-Ra-Tone sockets. All other sockets = Federal #16.
Walbert "A"-battery switch Pots. were Amsco
(3) "Duratran" RF transformers

(PR 1-28)

COCKADAY 8-TUBE SUPER-HET REFLEX
(1925) (Sht. 2)

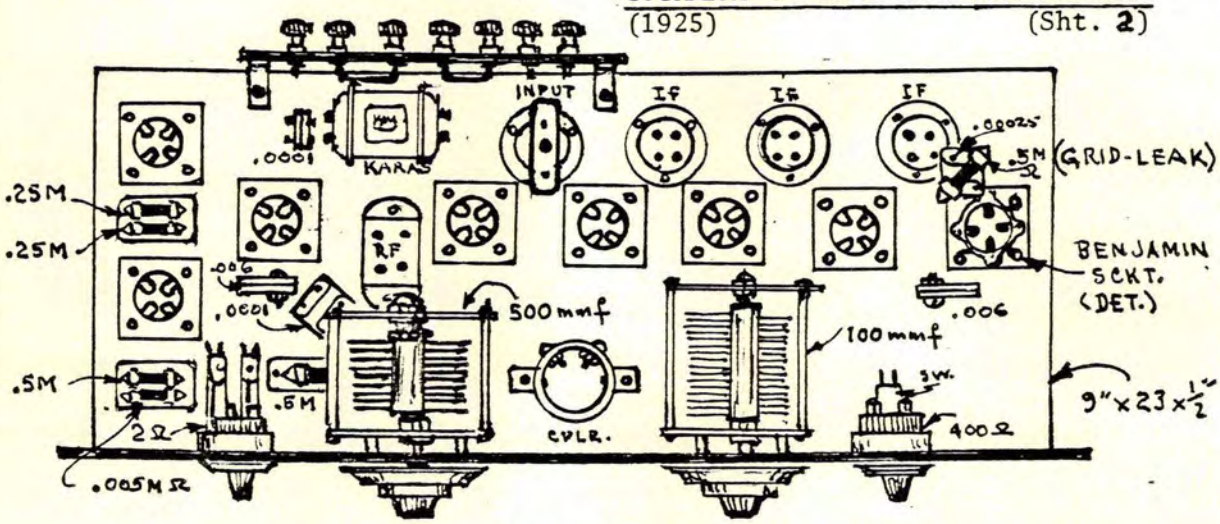

PLAN VIEW

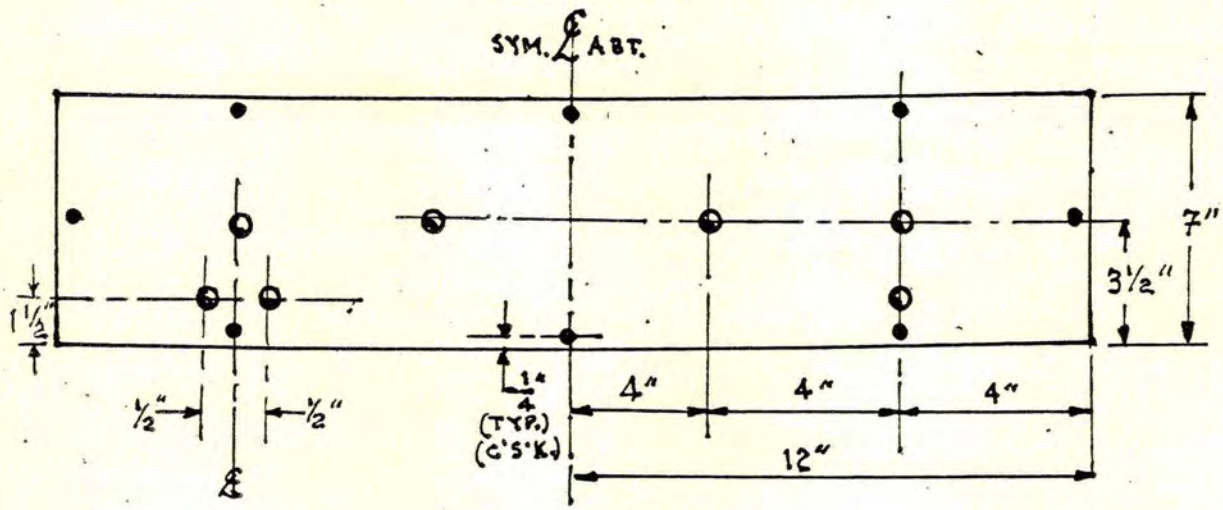

PANEL LAYOUT

Mounting holes not shown, to suit Variable Condensers & rheostat ~ potentiometer used.

For dimensions of component placement on baseboard, see PR.

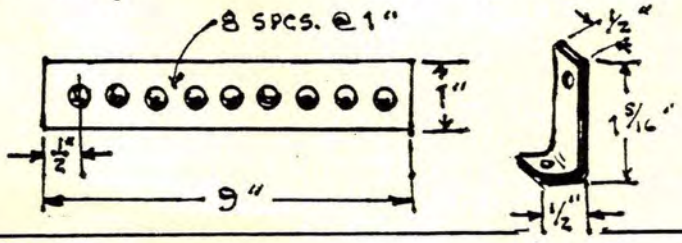

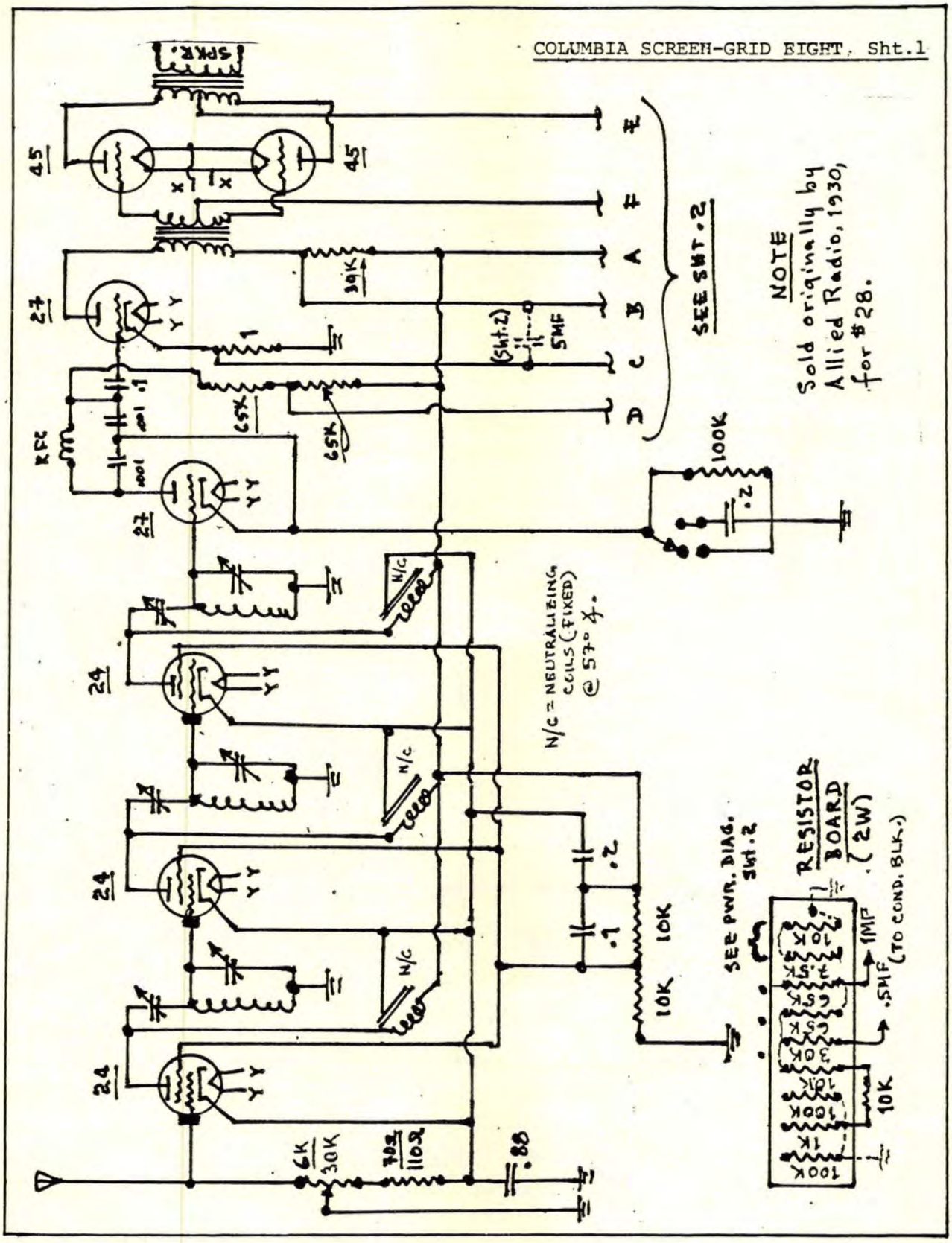

NOTE
Sold originally by Allied Radio, 1930, for $28.

COLUMBIA SCREEN-GRID 8, Sht. 2

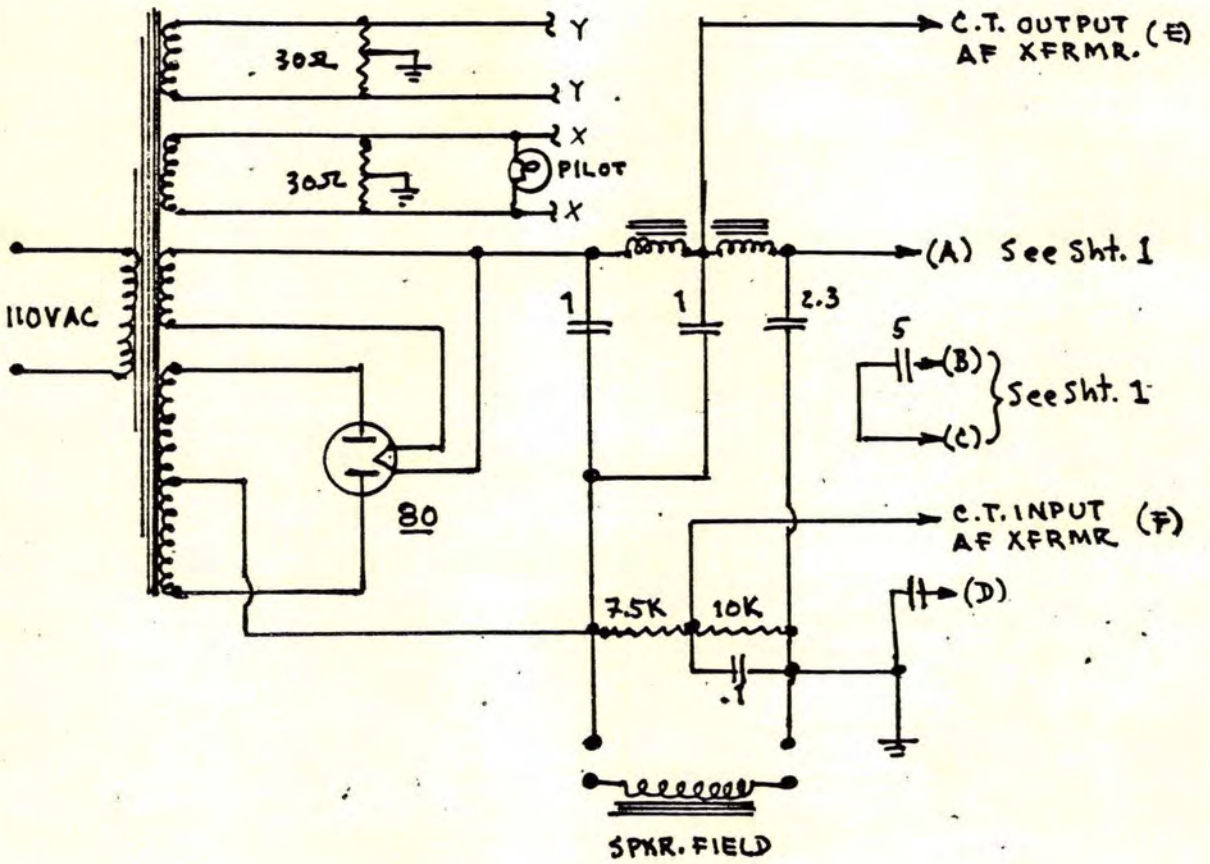

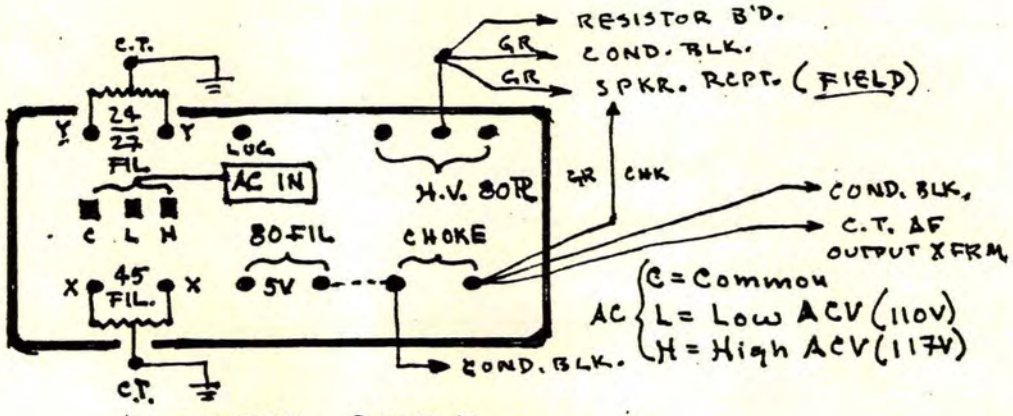

ORIGINAL POWER XFRMR. CONTACTS (Bottom View)

CROSLEY XJ RECEIVER, 1925

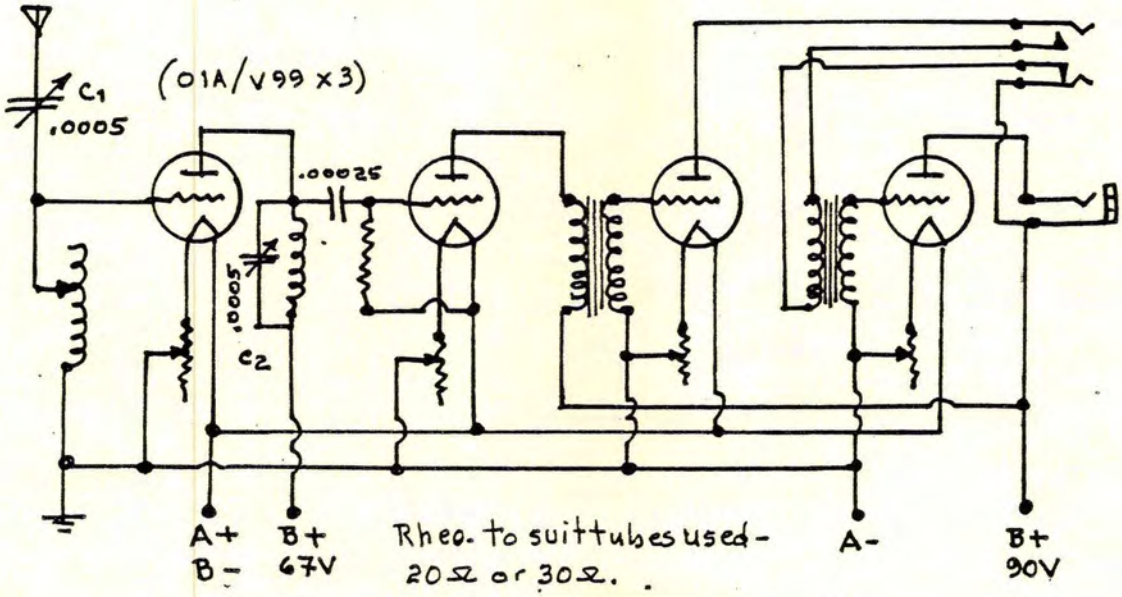

NOTES

(4) FIL Rheostats @ 10-ohms each.

Grid-Leak = 1 to 3 Megohms,

GRID CONDENSER = .00025 MFD.

COIL FORMS: ANT Coil = 45T #22 DCC, 3"Ø.
Plate Coil = 45T #22 DCC, ".
ANT coil tapt @ 7, 15, 23, 30 Turns.

Tuning of this set was not simple. Variable C2 tunes the Plate, and can cause the tube to oscillate, making tuning critical

DAVEN AC-5 RCVR., 1928

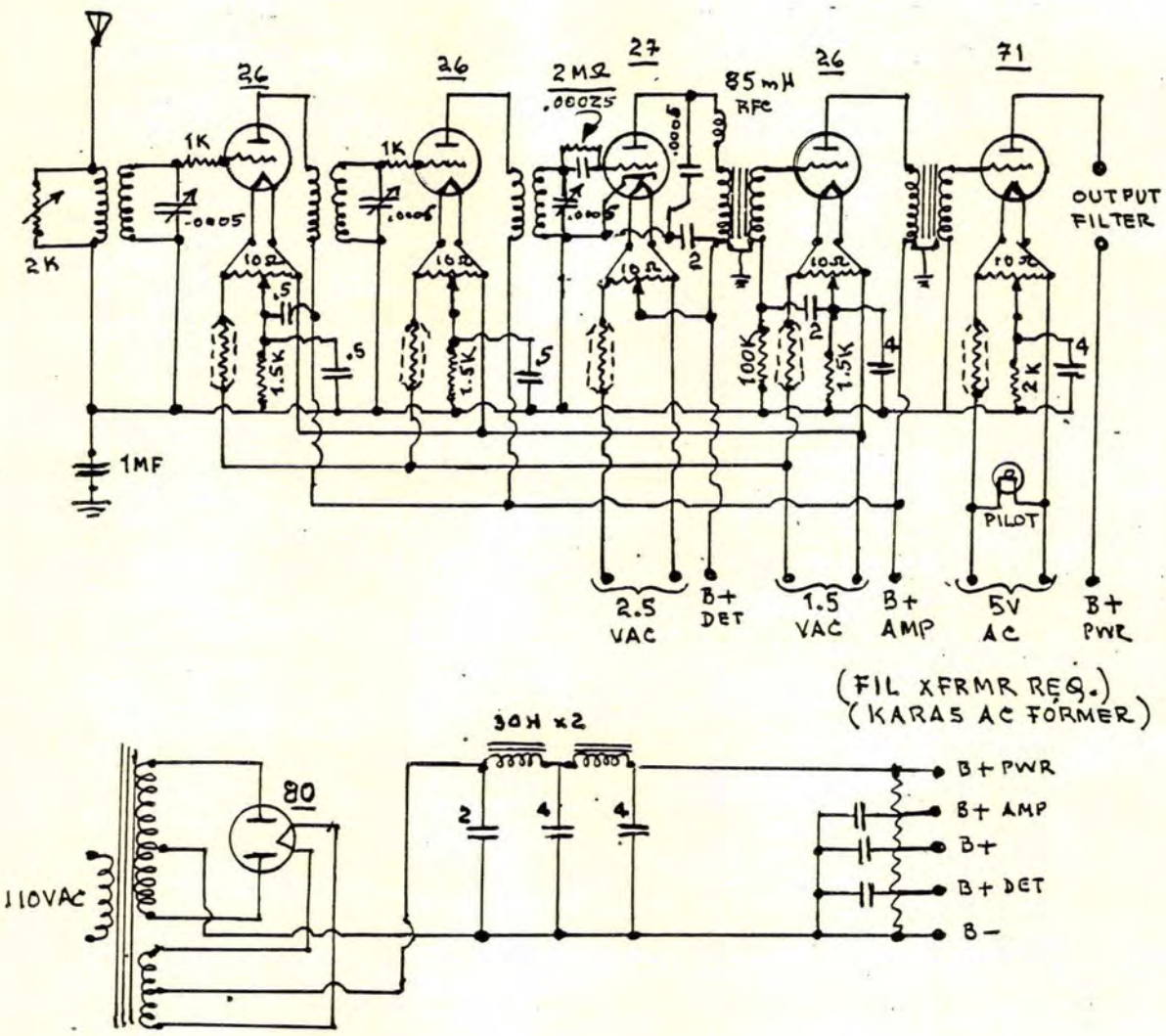

PANEL = 7" x 24" (Cortland)
(6) Binding Posts
HAMMARLUND Drum Dial
HAMMARLUND .0005 Variables (3)
THORDARSON "Overtone" AF Transformer, (2) required; originally $6 each.
KARAS AC Former FIL xfrmr.

10-ohm Resistors are C.T.
Ballasts required for 26, 27, 71.
(2) Speaker Tip Jacks.
(13) Resistor Mountings. (DAVEN)

(RW 1-28-29)

DAVEN BASS—NOTE RECEIVER, 1926; Sht.1

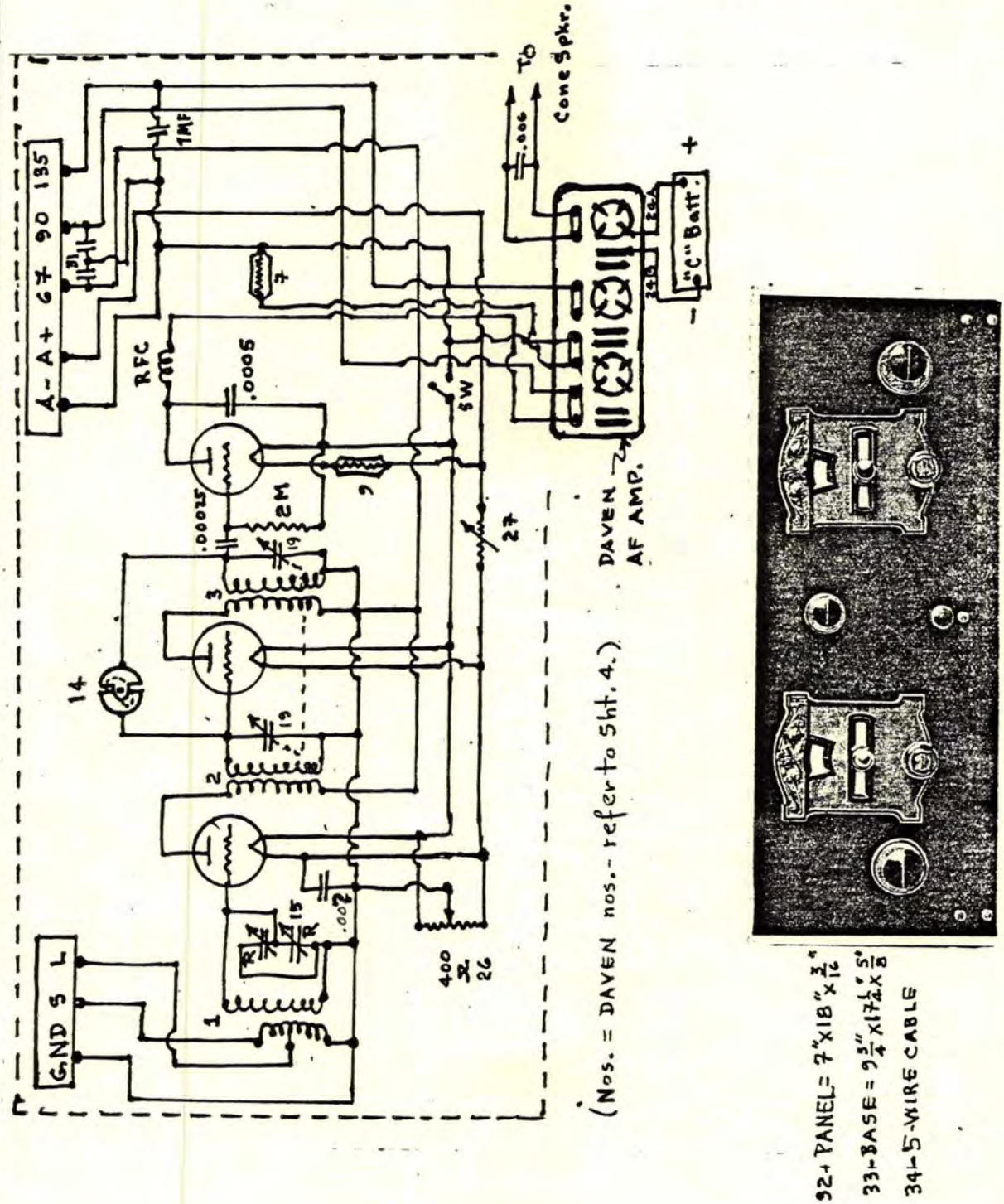

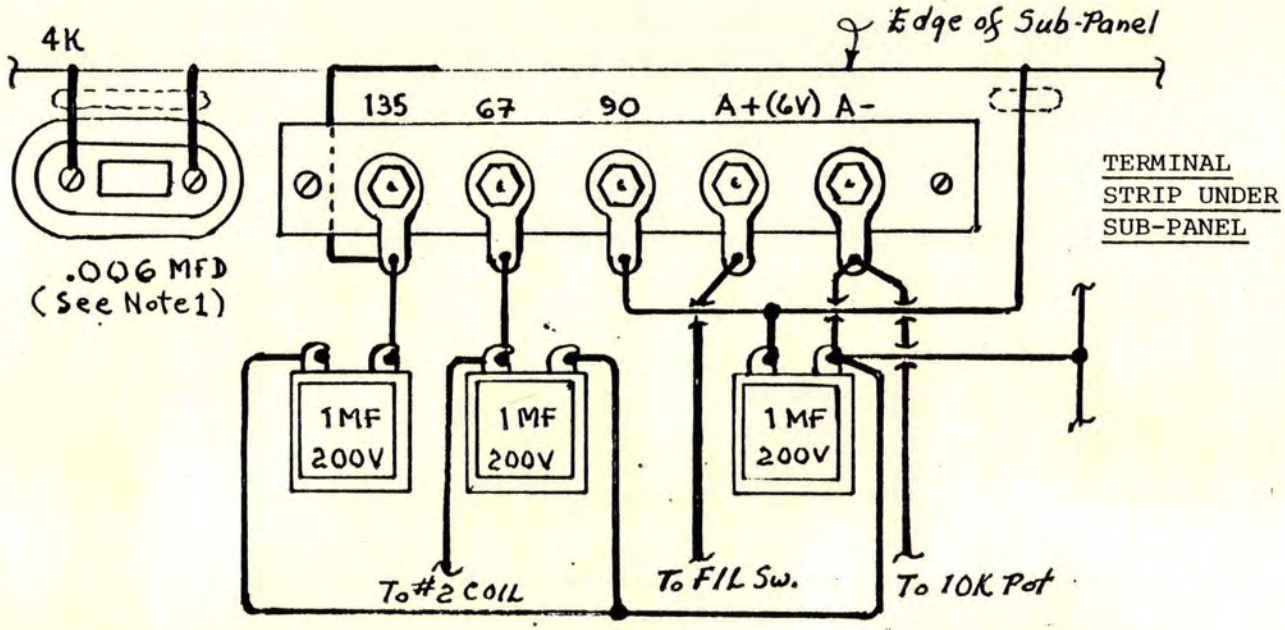

NOTES:

1. Capacitor shown may be 0.1, .25, .006.

2. Last version of DAVEN Aplifier had nickle-plated tube skirts & without cast-in feet, as with the original.

3. Terminal 19E is a grounded frame connexion, & NOT a stator connexion, as shown on original DAVEN drawings.

4. "C" Battery (+) terminal connected to 4K of AMPLIFIER unit; (-) terminal connected to 4J.

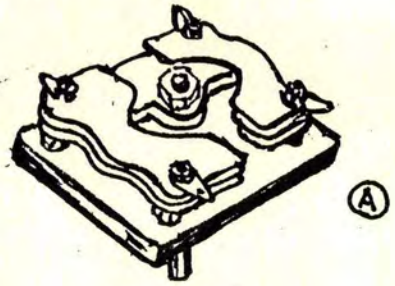

"BUTTERFLY" VARIABLE (Item #14)

(RW 11·27·26)

DAVEN BASS-NOTE RECEIVER, 1926:Sht.2

DAVEN BASS-NOTE RECEIVER, 1926; Sht. 3

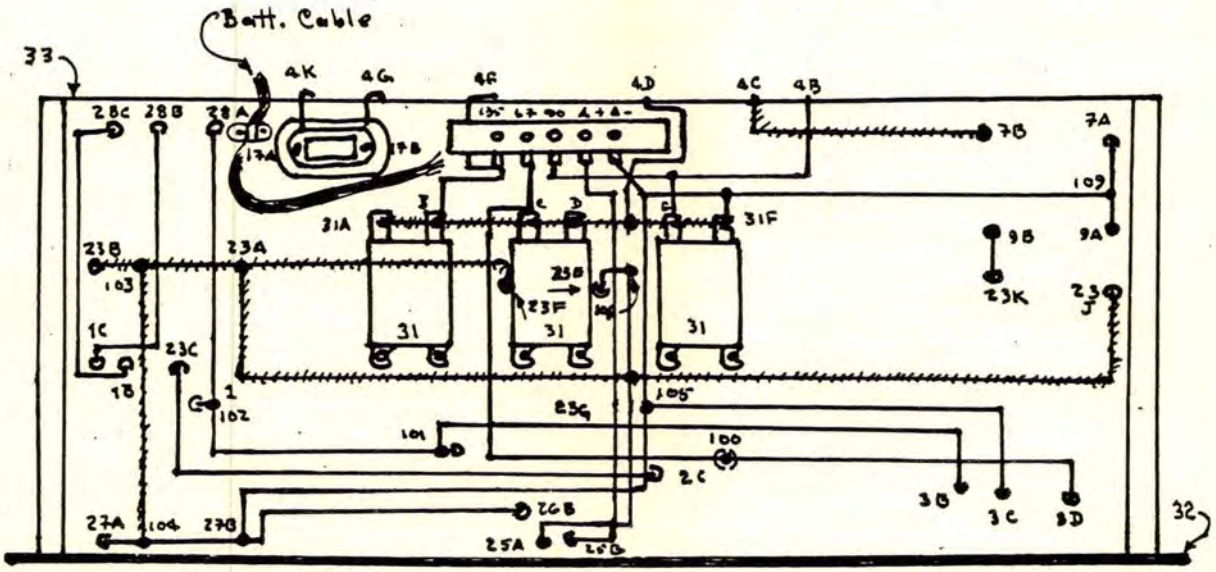

= connexion

= no connexion

3-Digit nos. = connexions

BOTTOM VIEW
(Nos. correspond to Sht. 4)

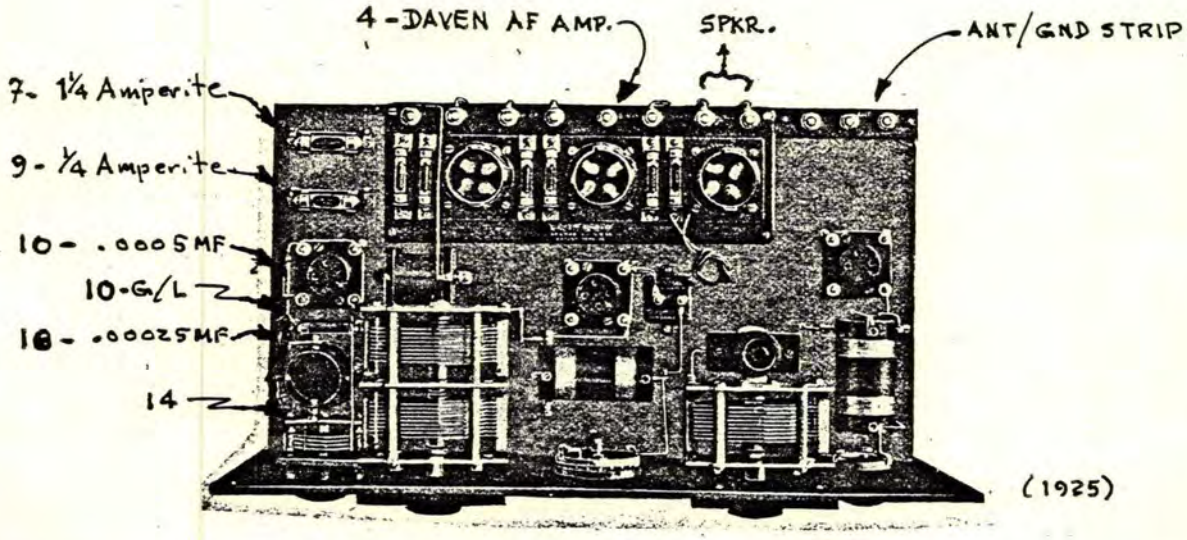

DAVEN BASS-NOTE RECEIVER: 1926; Sht. 4

LEGEND FOR NUMBERS ON SHT. 3:

3 = RF coil #3
7 = 1.75A Amperite
2 = RF coil #2
17 = .006 MFD Capacitor
25 P-P Filament switch
27 = 10-ohm rheostat
4 = Daven AF amplifier
9 = .25A Amperite
1 = RF coil #1
23 = (3) UX sockets
26 = 400-ohm pot.
31 = (3) 1 MFD capacitors

LEGEND FOR NUMBERS SHOWN ON OTHER SHEETS:

5 = (3) Mu-20 tubes
8 = 1A Amperite
11 = Grid-leak mounting
13 = RFC
15 = Daven Balancer (Midget)
16 = .0005 MFD
18 = .00025 MFD
20 = 350 MMF variable
22 = (2) O1A
28 = ANT/GND strip
30 = 5-Conductor cable
33 = Base = 9.75" x 17.25" x 5/8"
34 = 20-ft. Multi-coloured buss-wire
6 = Mu-6 Power tube
10 = 2-Megohm Grid-leak
12 = Special "A" variab;e
14 = Daven Compensator (this was the "butterfly" variable shown on Sht. 2).
19 = 2-Gang 350 MMF Variable
21 = (2) Vernier dials
24 = 9V "C"-Battery
29 = 5-Terminal cable connection
32 = Panel = 7" x 18" x 3/16".

NOTE:

"C"-Battery MUST have a (+) (24A) connected to 4K. This became (-) (24B) to 4J on AF amplifier on later versions.

Do NOT attempt to operate set without a "C"-Battery.

RF coils = 1½" Ø x 3" Lg.

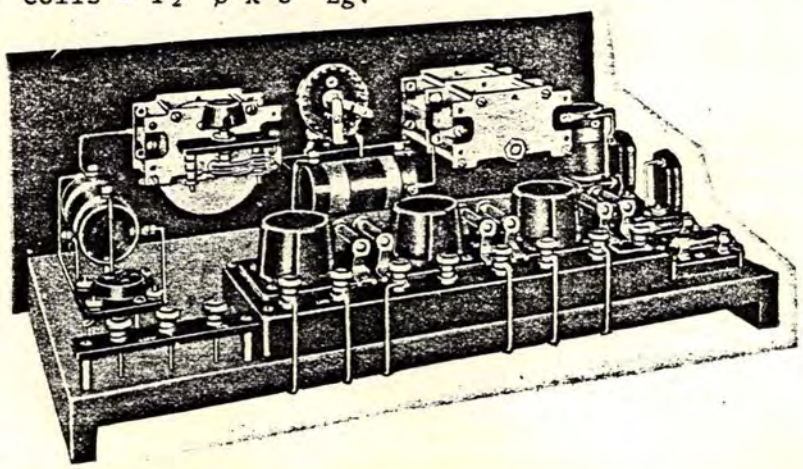

DAY-FAN 5-TUBE TRF, 1923; Sht. 1

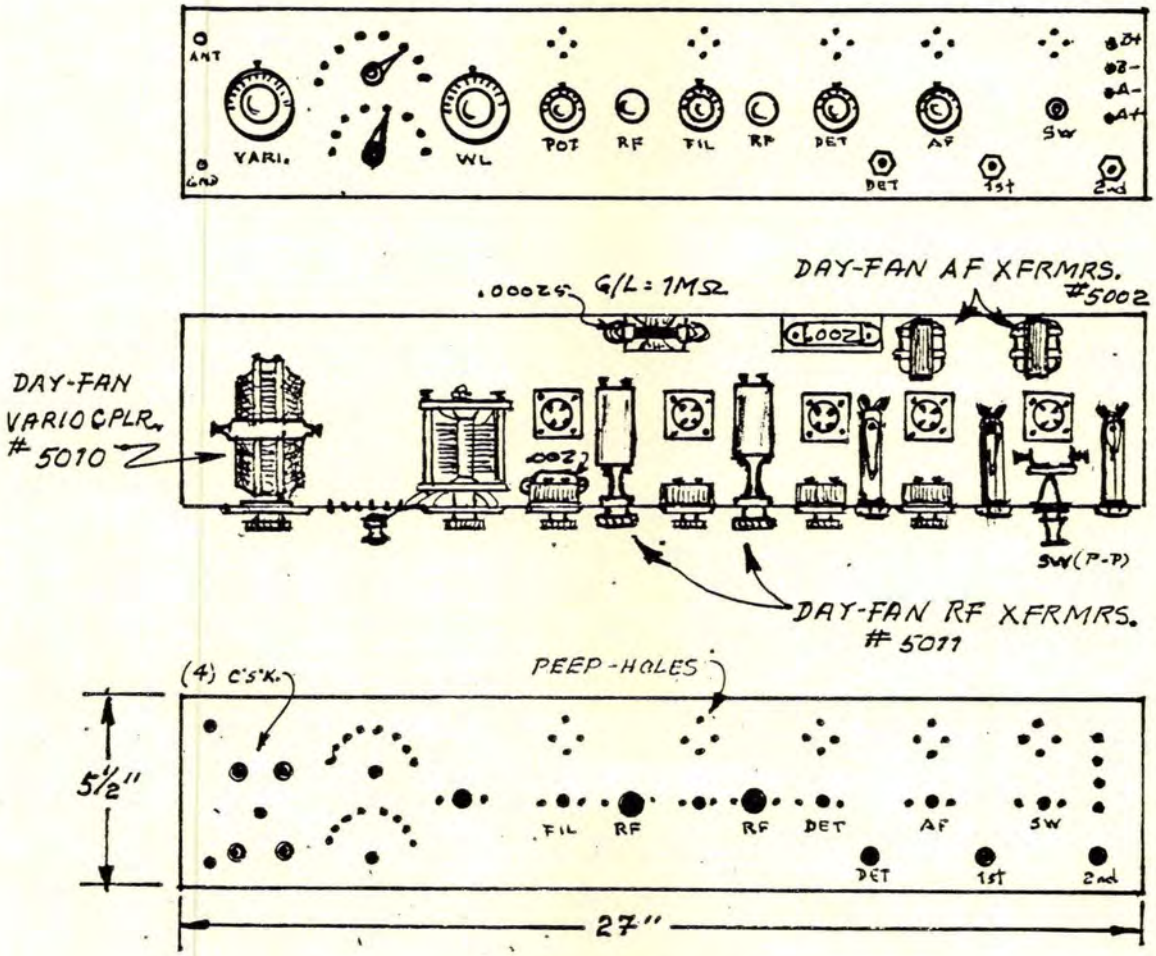

TUNING NOTES

1. Connect set as shown by diagram, sht. 2.
2. Adjust FIL current for tubes used.
3. Set Wave-Length control to WL desired.
4. Set Variocoupler in vertical position.
5. Tune in station w/ Variable condenser.
6. Use pot. to clear-up signal.
7. Fine tune w/ Variocoupler rotor.
8. Note odd-size panel.

(File)

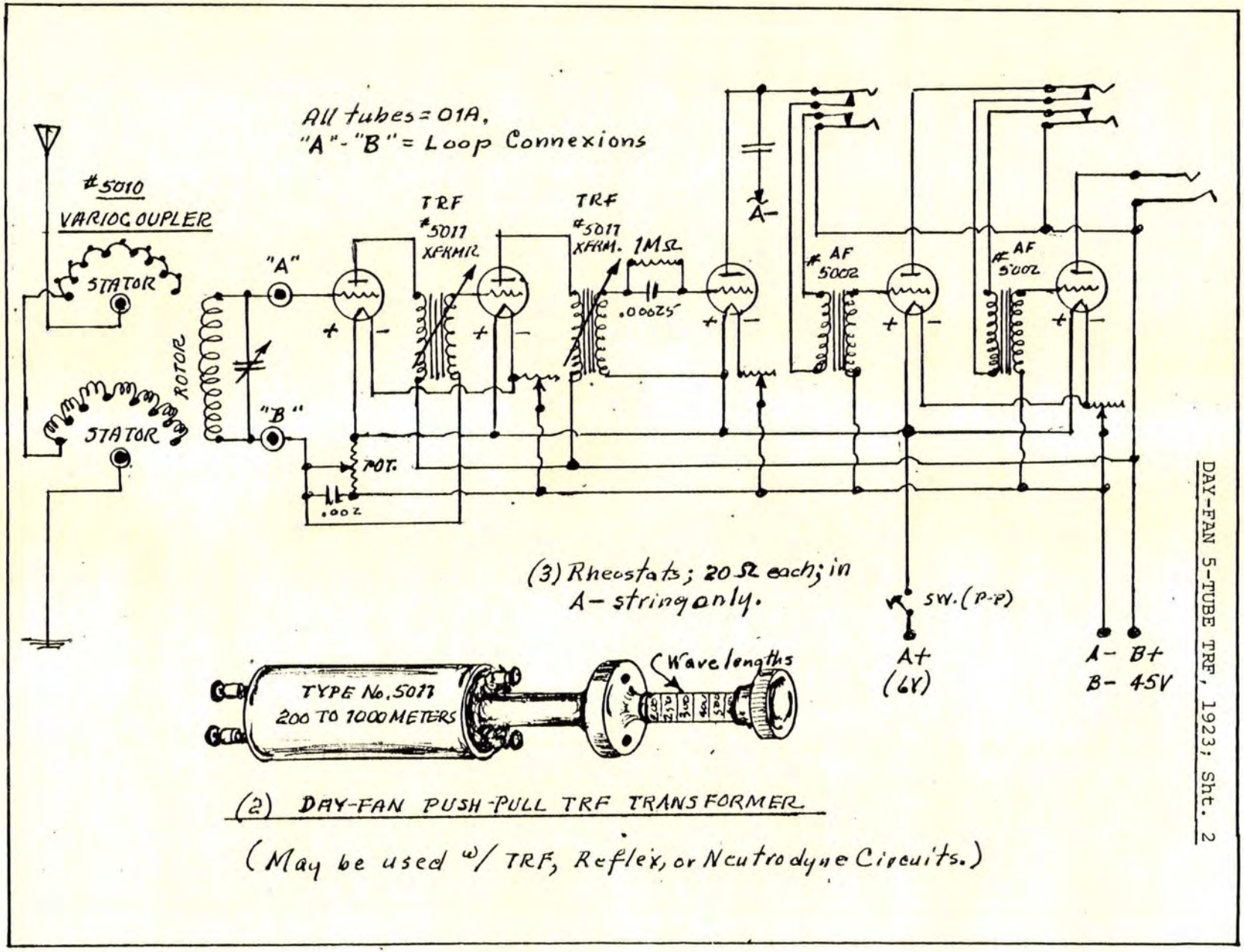

DAY-FAN 5-TUBE TRF, 1923; Sht. 2

DeFOREST "COMMERCIAL KILLER", 1926
(Sht. 1)

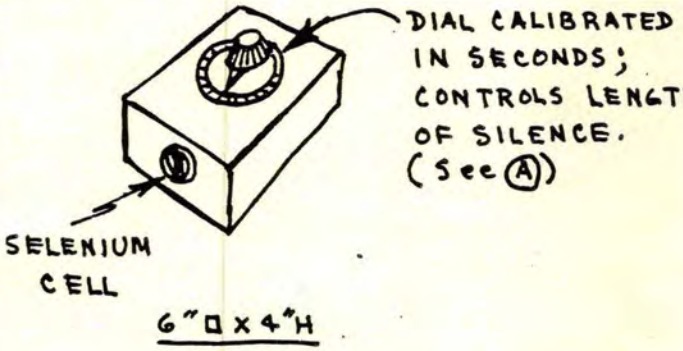

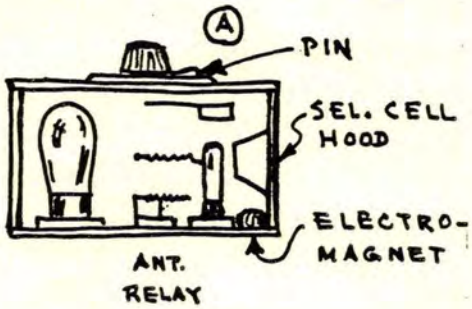

NOTE:

WAFER DISC FITTED OVER DET. TUBE PRONGS IN RCVR.

DISC w/ VARIOUS SIZE HOLES FOR TIME-LAG OPERATION OF DASHPOT.

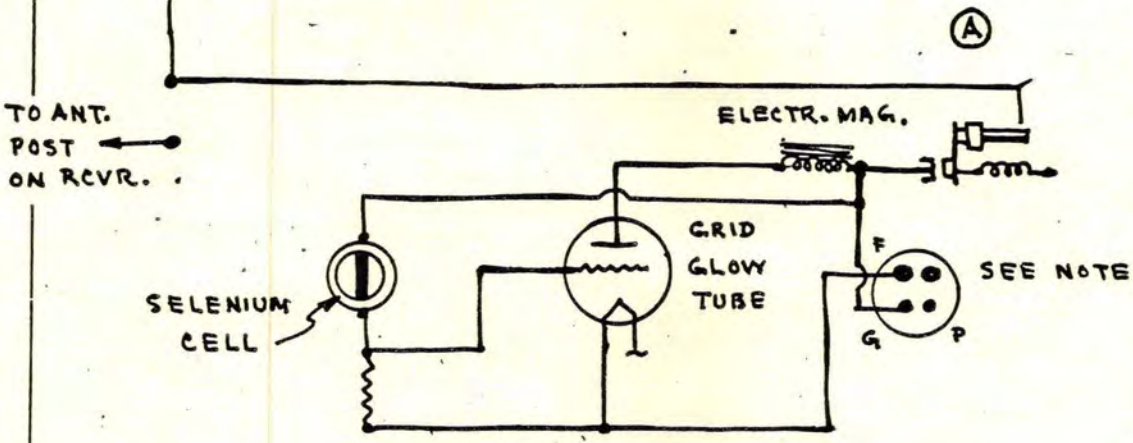

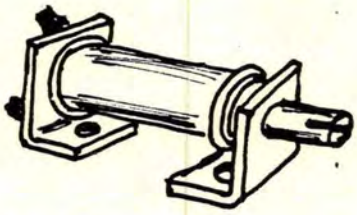

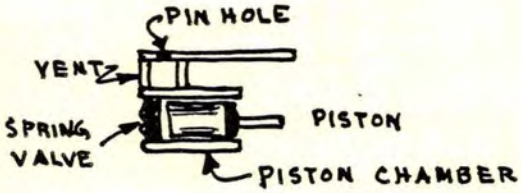

GUARDIAN INTERMITTENT DUTY SOLENOID RELAY
(1 3/16" x 1 3/4" x 5/16" ø ~ 2.48)

DeFOREST "COMMERCIAL KILLER", 1926
(Sht. 2)

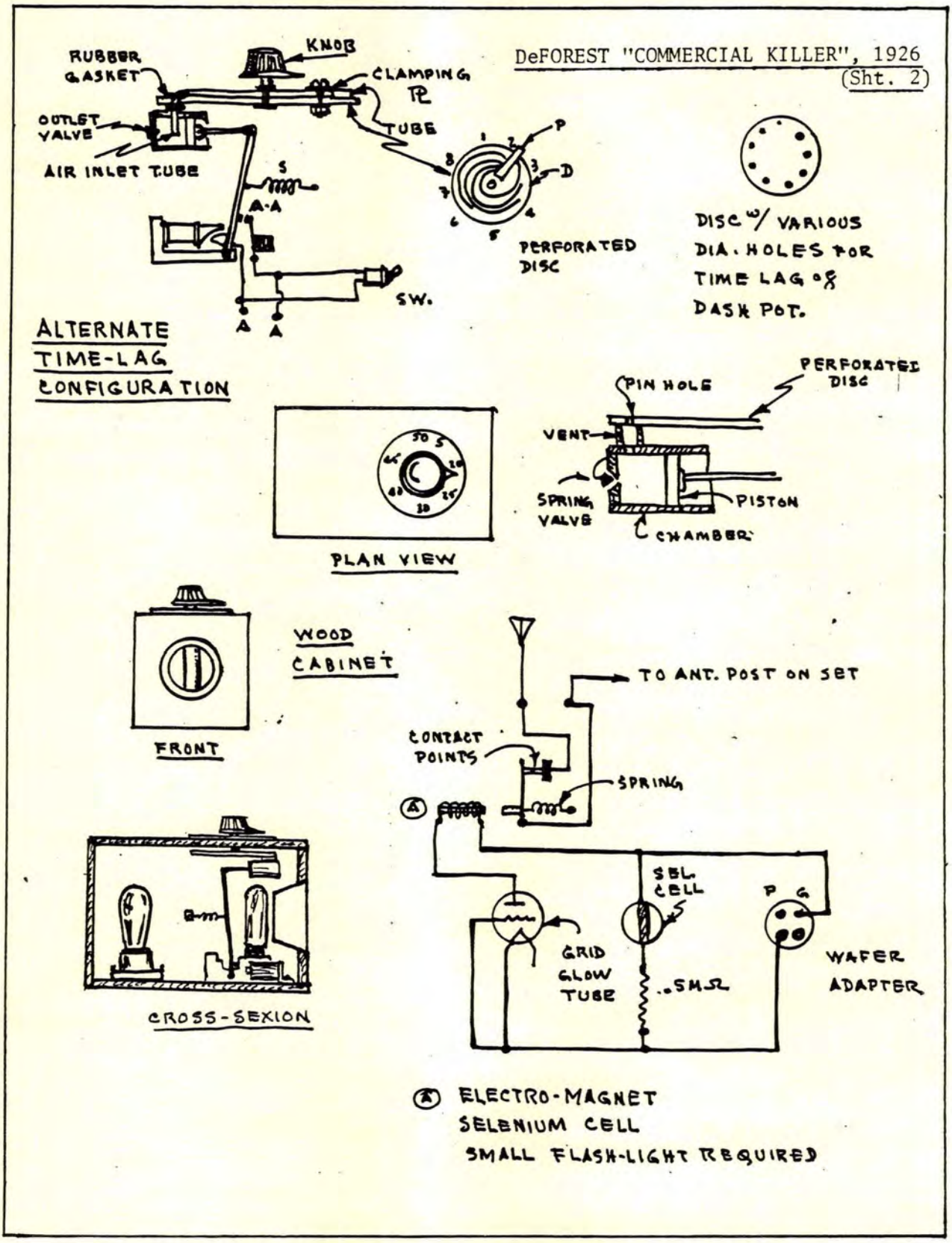

(Sht. 1)

BERNARD's "DIAMOND-OF-THE-AIR" SERIES

Herman Bernard joined Radio World in 1924 as Associate editor, Technical editor, Radio Consultant, and with a few other titles that seemed to appeal to him. For more than six years there was hardly an issue of Radio World - which was a weekly - that did not contain something by Bernard. This was no small accomplishment.

He created his first circuit in March of 1925, and after its publication, began furiously developing what was to become a small phenomenon in early Radio - the first cult marque, known as Diamond-of-the-Air. There were at least a dozen variants of the circuit over the years, and I have selected what may be deemed representative circuits.

The cult apsect came about like this: Bernard was the first to offer an identifying brass name-plate, later a decalcomania, "for free" to anyone who constructed his circuit and notified him (with the usual laudatory comments). Radio World then took to publishing listings of the names of those who had joined the "club".....all of which, of course, is but another indication of Radio as a sociological phenomenon.

The only other marque to have a club of its constructors was the very fine Victoreen. The difference between them was that Bernard in collaboration with Radio World deliberately set out to create a mystique around the Diamond-of-the-Air, while the idea of a club of Victoreen set builders occurred spontaneously across the country. (The story of all of the Victoreen variants will be found in the seperate MONOGRAPH.)

The circuit that formed the basis of all subsequent Diamonds was called "Superdyne". The chief attraction of the Superdyne was simple construction and acceptable results within its limitations. Also, it is and was cheap. At a time when Woolworth and Kresge were selling all manner of radio parts, cheapness was a consideration.

Bernard subsequently went into business for himself, as was the fashion for many a radio magazine editor; then became associated for awhile with small semi-retail, semi-manufacturing houses, all devoted to pushing the sale of "exclusive Diamond-Of-The-Air parts specified by the designer, Herman Bernard".

The Diamond is still easy to construct and it does work with quite acceptable results, even by modern standards. Have a go.

* * *
* *
*

"DIAMOMD OF THE AIR", 1925/1926
(Sht. 2)

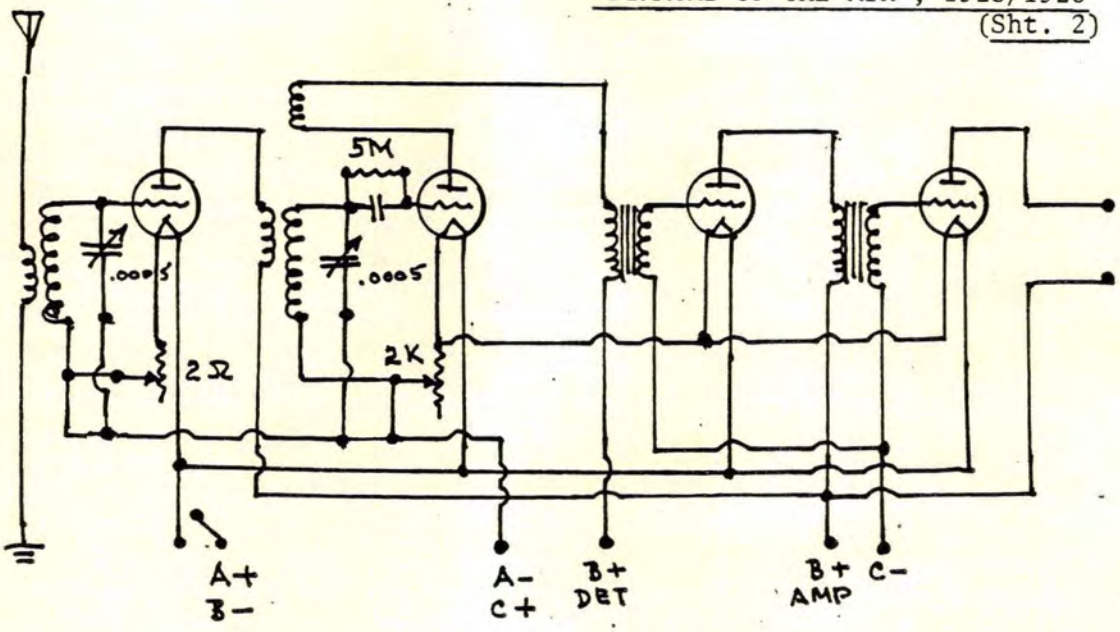

1925 MODEL

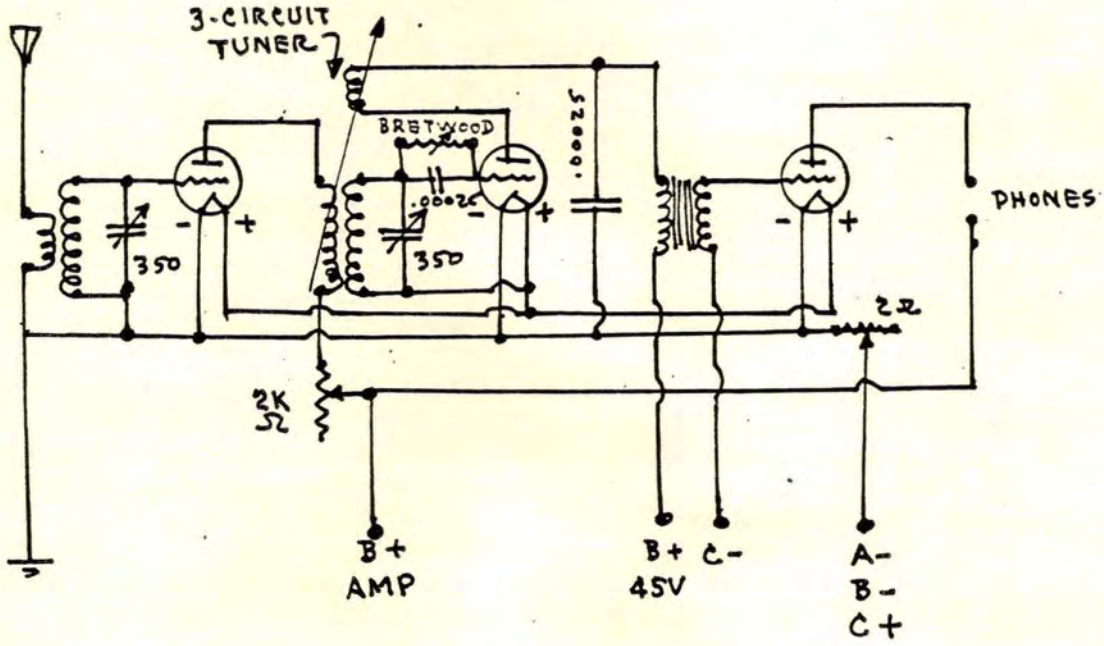

1926 MODEL

(RW 10.16.26)

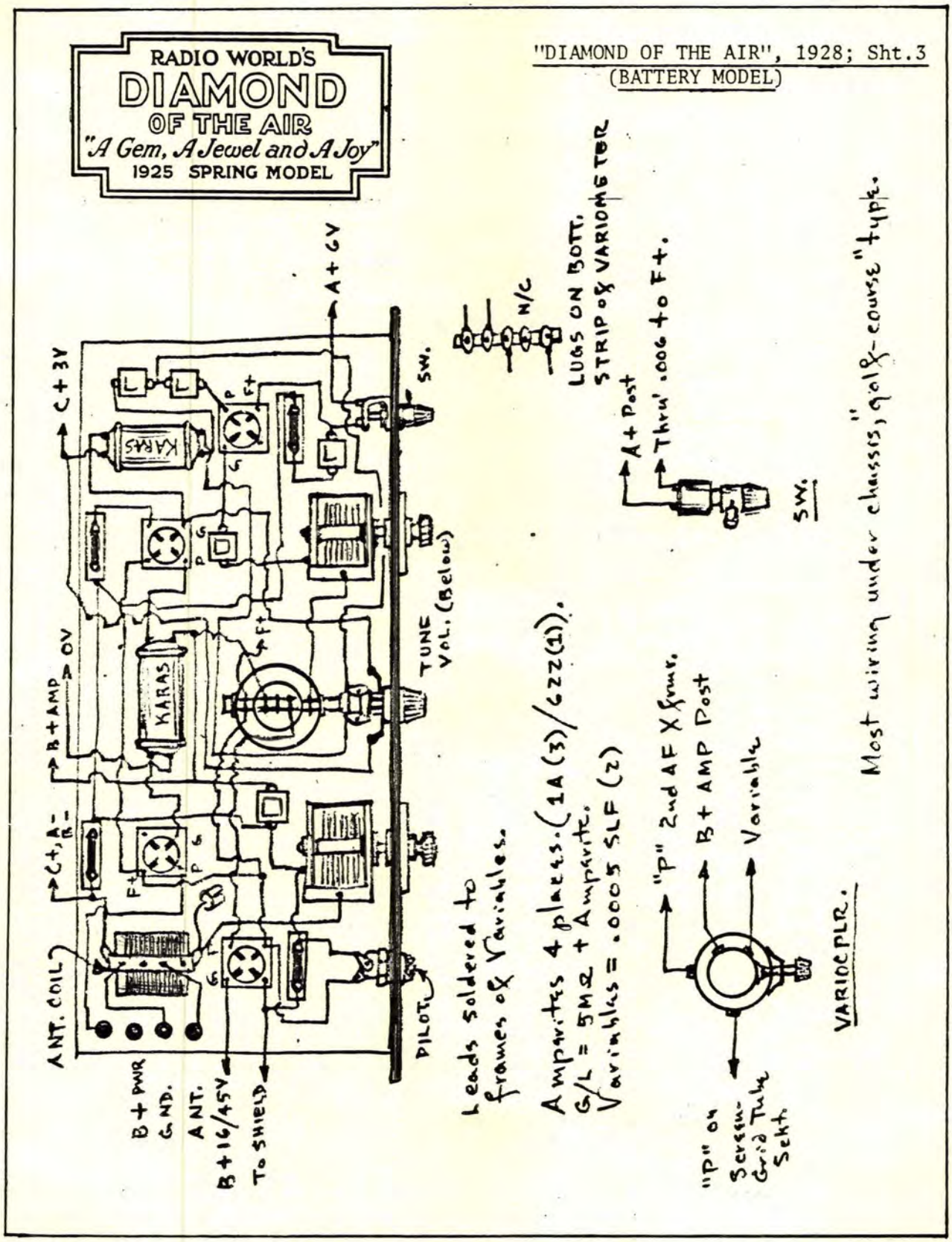
RADIO WORLD'S
DIAMOND
OF THE AIR
"A Gem, A Jewel and A Joy"
1925 SPRING MODEL
"DIAMOND OF THE AIR", 1928; Sht.3
(BATTERY MODEL)
A+ 6V
C+ 3V
B+AMP
0V
C+, A-
B-
ANT. COIL
B+ PWR
GND.
ANT.
B+16/45V
TO SHIELD
PILOT
SW.
TUNE
VOL. (Below)
KARAS
N/C
LUGS ON BOTT.
STRIP OF VARIOMETER
A+ Post
Thru' .006 to F+.
SW.
Most wiring under chassis, "gold-course" type.
Leads soldered to frames of Variables.
Amperites 4 places. (1A (3)/6ZZ(1)).
G/L = 5MΩ + Amperite.
Variables = .00005 SLF (2)
"P" 2nd AF X frmr.
B+ AMP Post
Variable
"P" on Screen-Grid Tube Sckt.
VARIOCPLR.

"DIAMOND OF THE AIR", AC MODEL;
(1928) (Sht. 4)

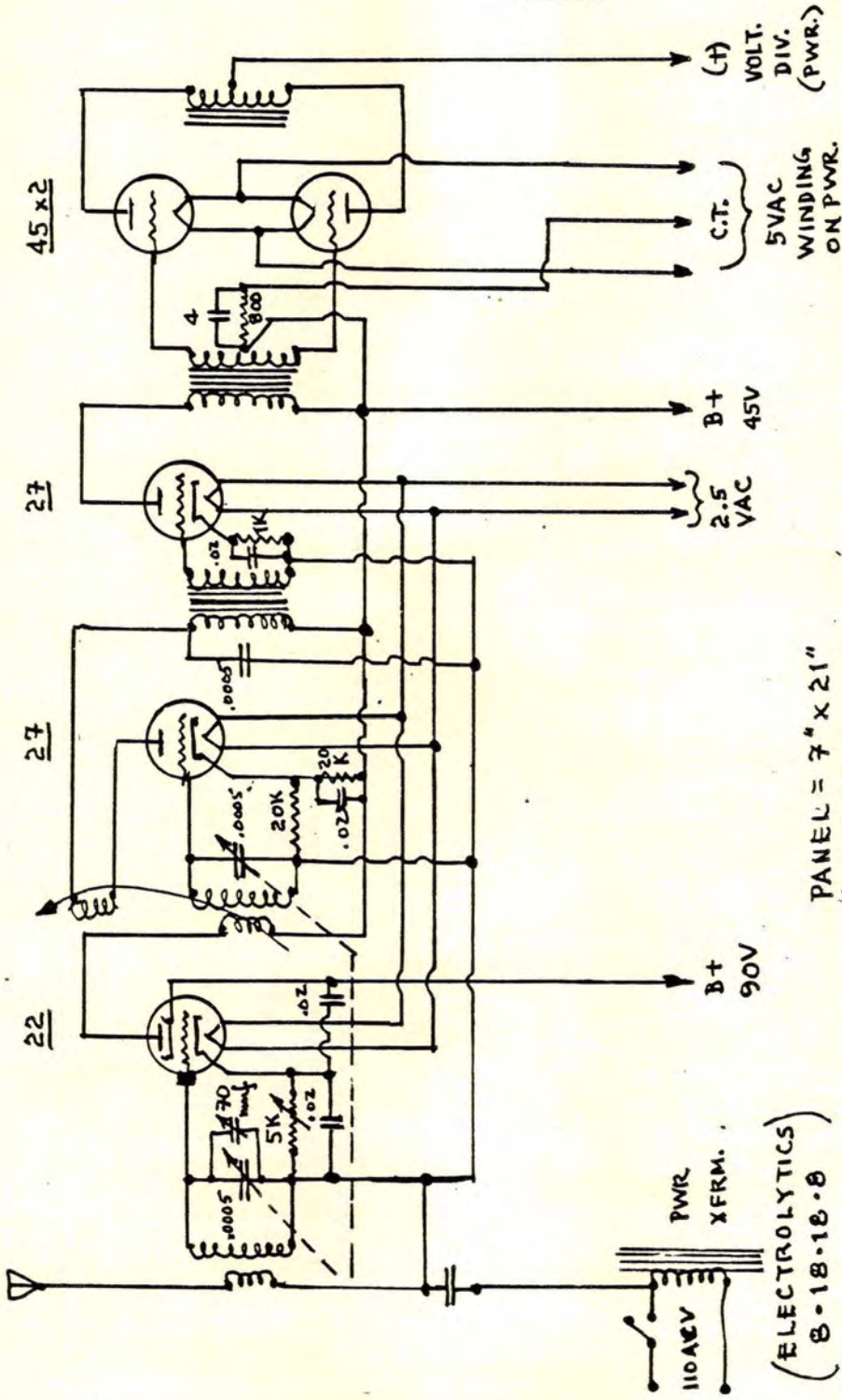

THE LAST Authorized "DIAMOMD OF THE AIR", 1929; Sht.5

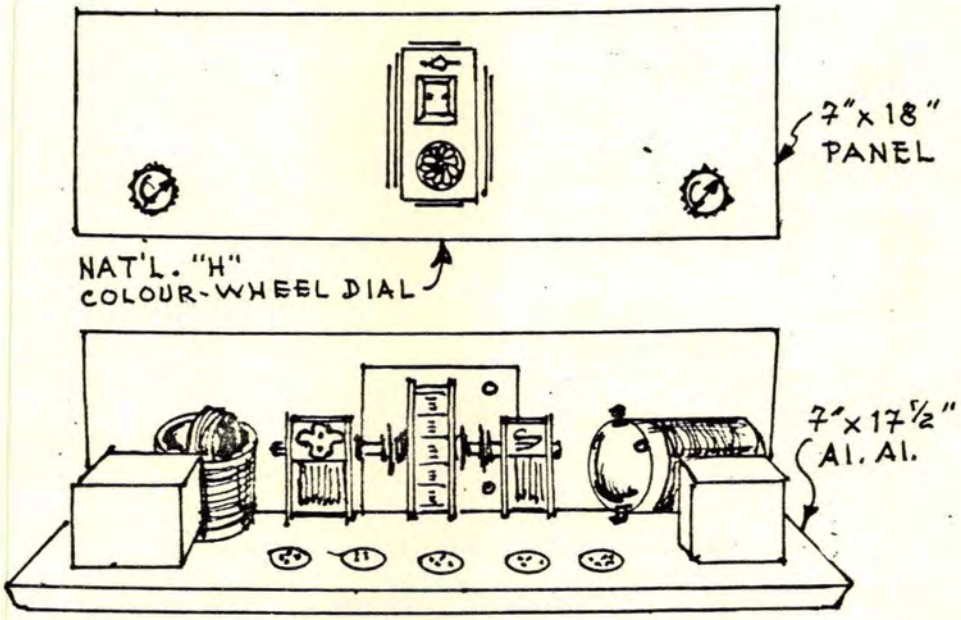

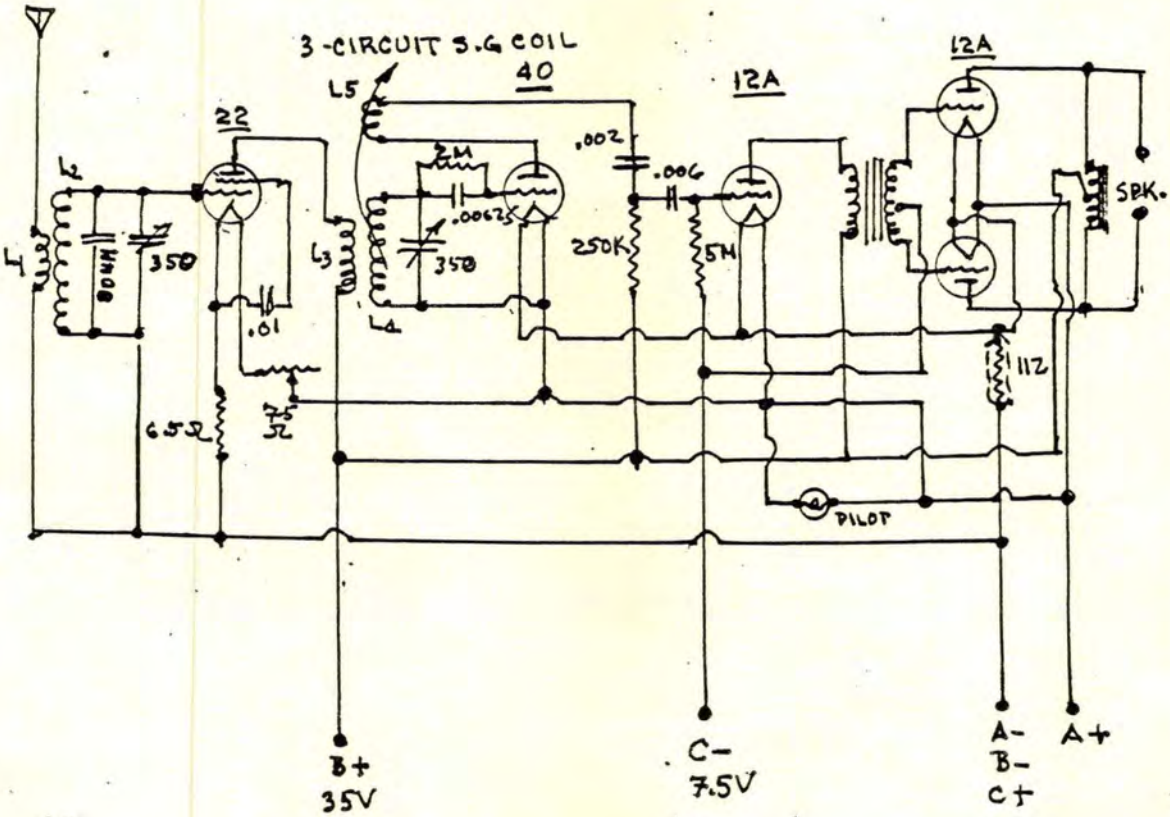

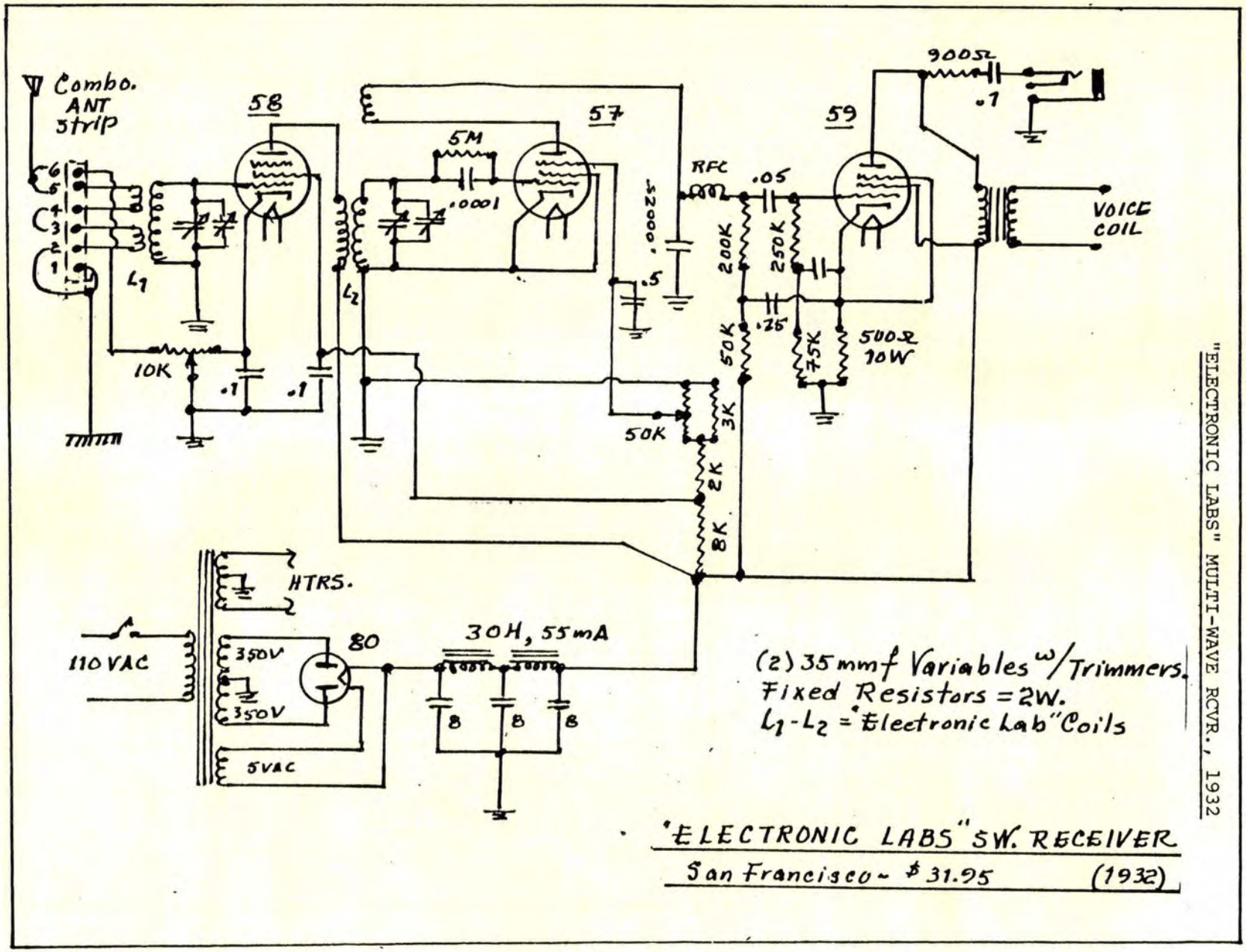

"ELECTRONIC LABS" MULTI-WAVE RCVR., 1932

"ELECTRON" Model VIII - F&M, 1926

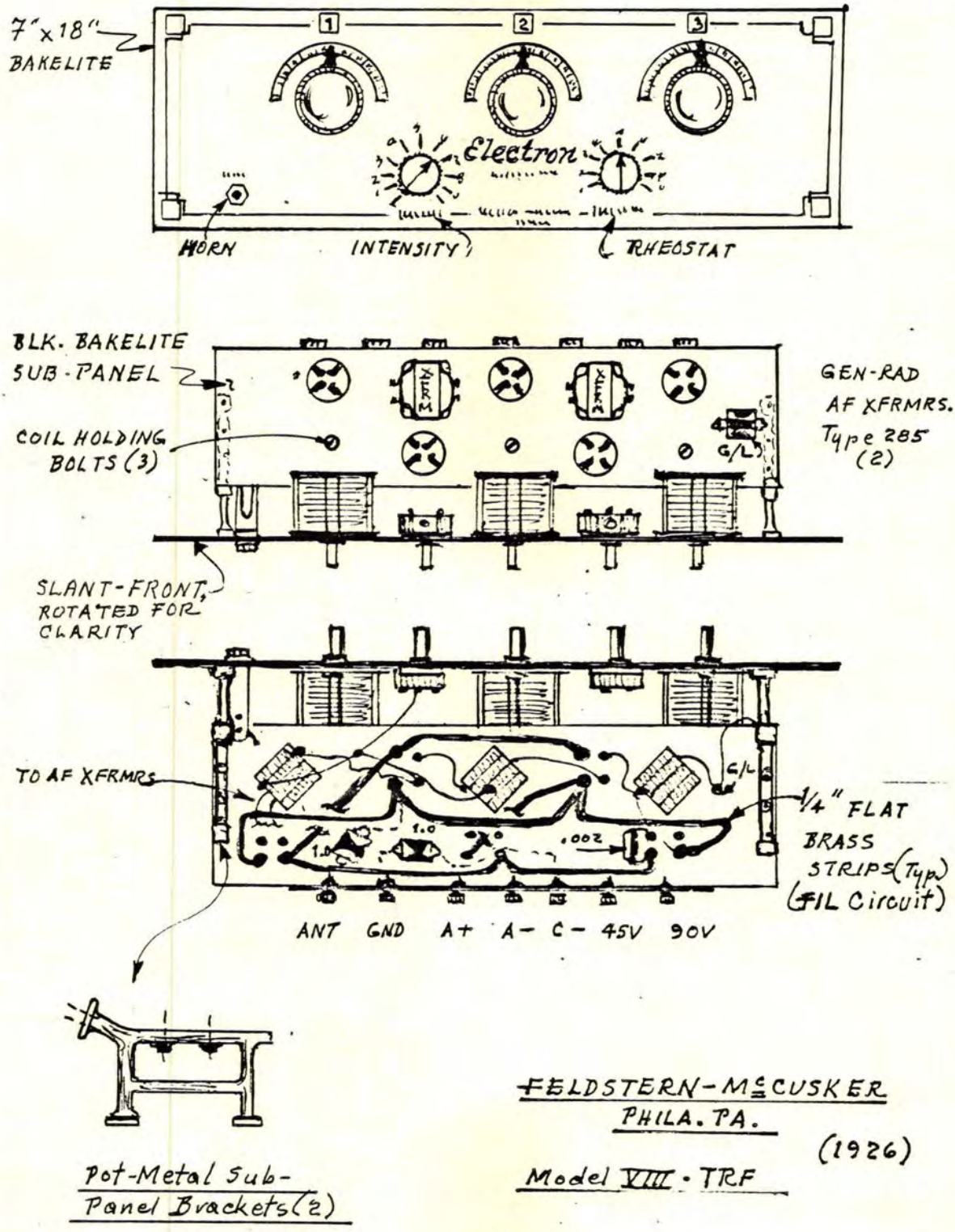

Pot-Metal Sub-Panel Brackets (2)

FELDSTERN-McCUSKER
PHILA. PA.

(1926)

Model VIII · TRF

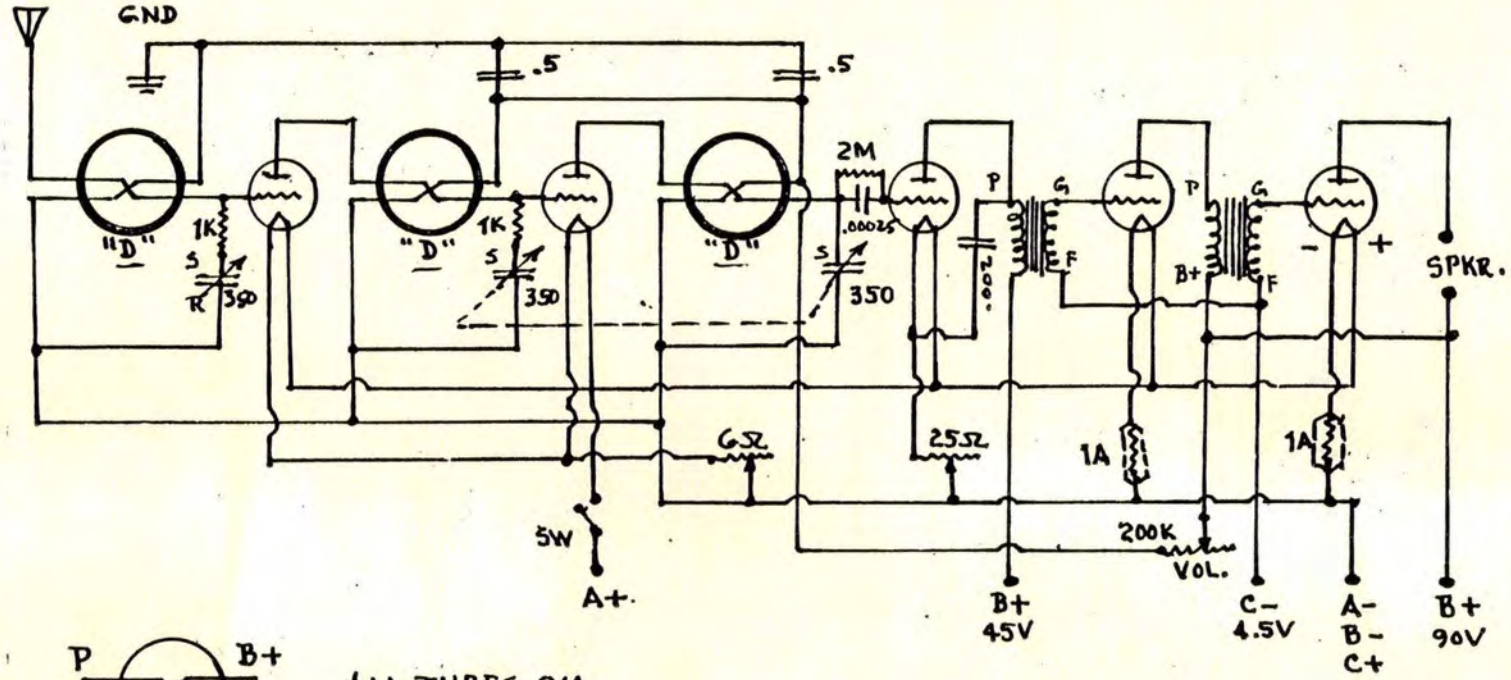

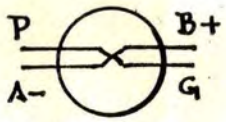

TYP. CONN. of "D" COILS

ALL TUBES OIA.
PANEL = 7" x 21".
BASEB'D. = 9" x 20".
(2) HALLDORSON "Overtone" AF XFRMRS.
7-CONTACT HAGEL PWR. PLUG.
HALLDORSON OUTPUT XFRM. OPTIONAL.

NOTE: MOUNT "D" COILS LAST!
℞ VOLTAGE IS CRITCAL @ 90V. IF 90V CANNOT BE MAINTAINED, REPLACE 1K GRID RESISTORS w/ 750Ω.

(RW 2.18.28)

ELLIS "D-COIL" FIVE, 1927
(See Also Vol. XII)

ERLA "MONODIC" NEUTRODYNE TRF, 1927
(Licensed From H-F-L.)

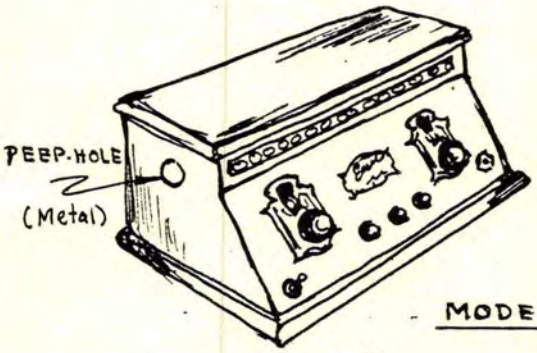

MODEL 5-50

Complete w/ Loop, Tubes, & Speaker, 1927 ~ $55

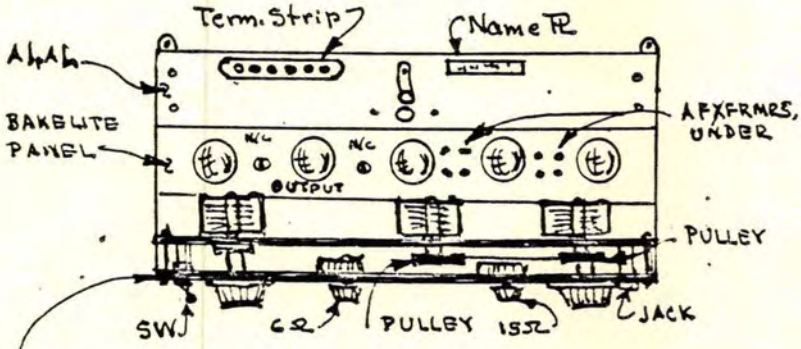

PANEL ROTATED TO VERTICAL POSITION

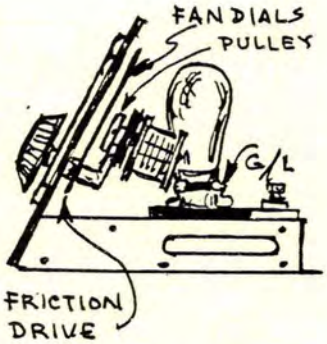

2-GANG VARIABLES DRIVEN BY A BRASS STRAP, 3/16" WIDE, RIVETTED TO PULLEYS.

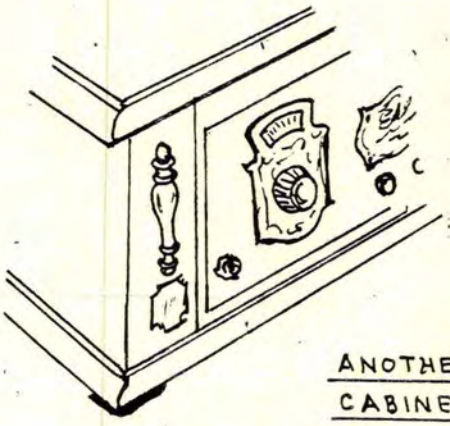

ANOTHER CABINET CONFIGURATION DETAIL

ERLA "PATHFINDER" TOROIDAL COIL SET
(1925)

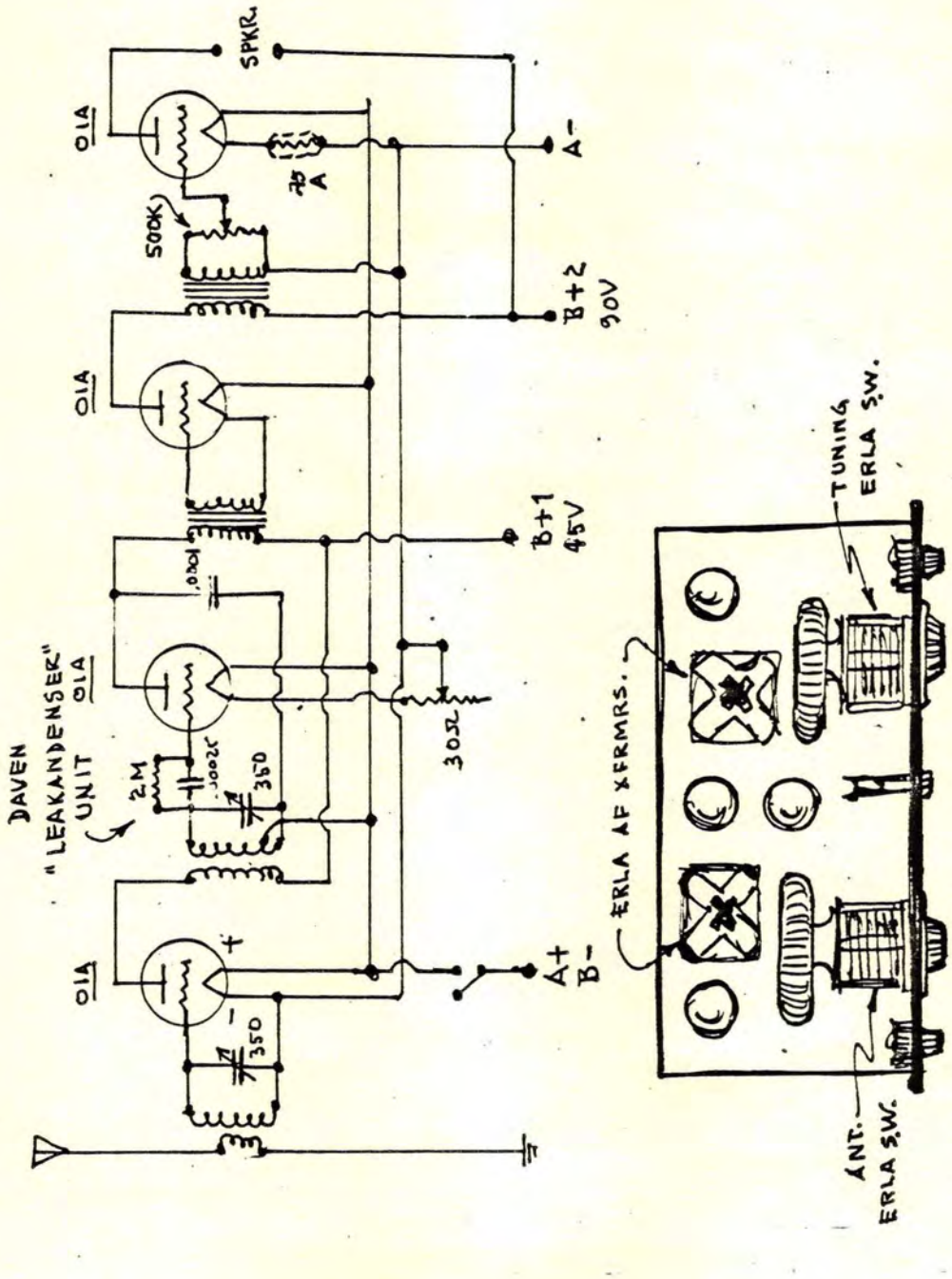

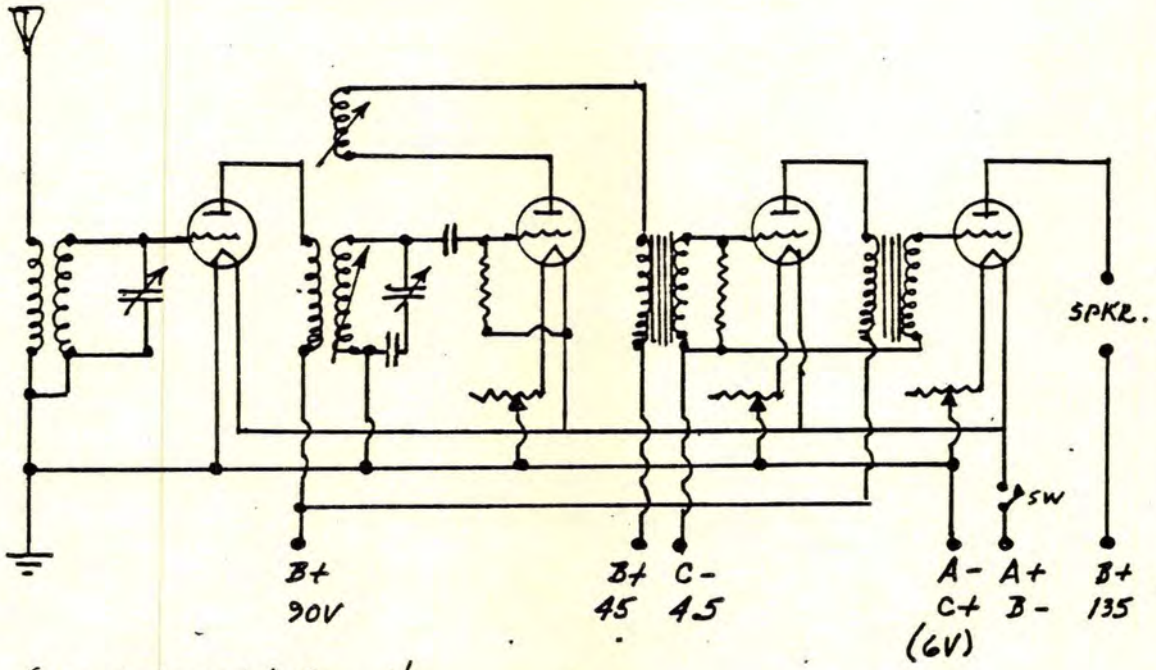

(1924) Original Circuit.

ERLA "Pathfinder", 1925 (Variant)

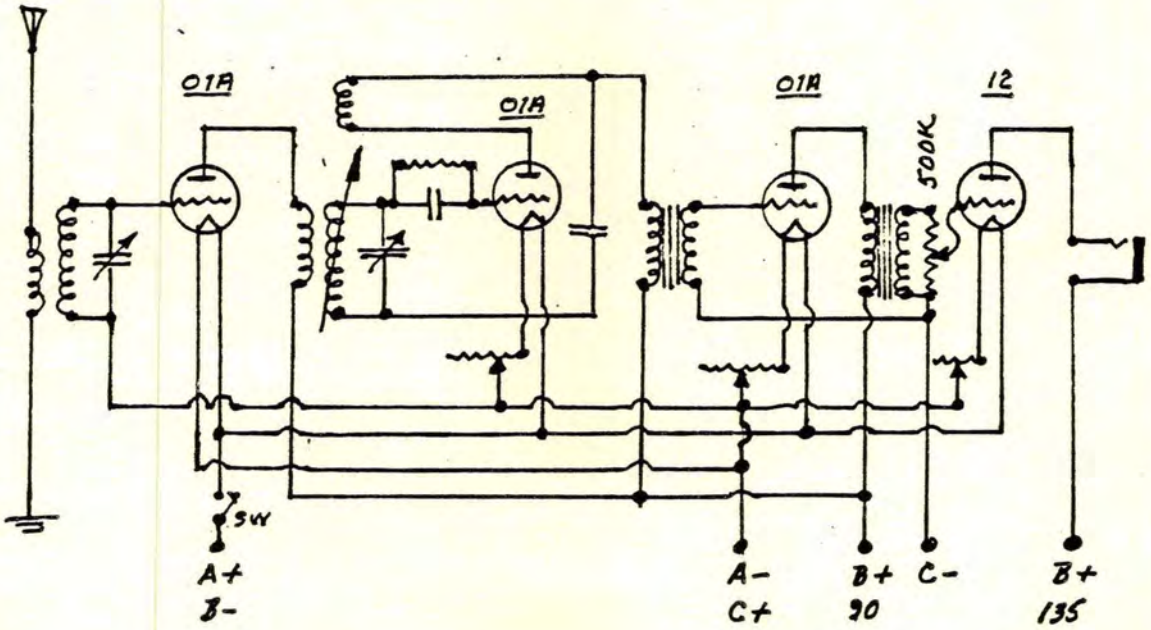

ERLA "SUPERFLEX" 5-TUBE RCVR., 1926
(Sht. 1)

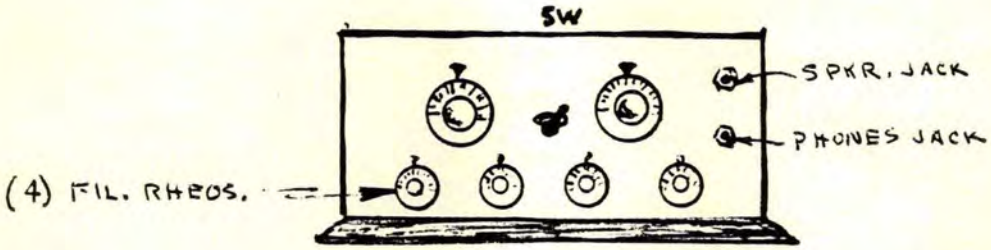

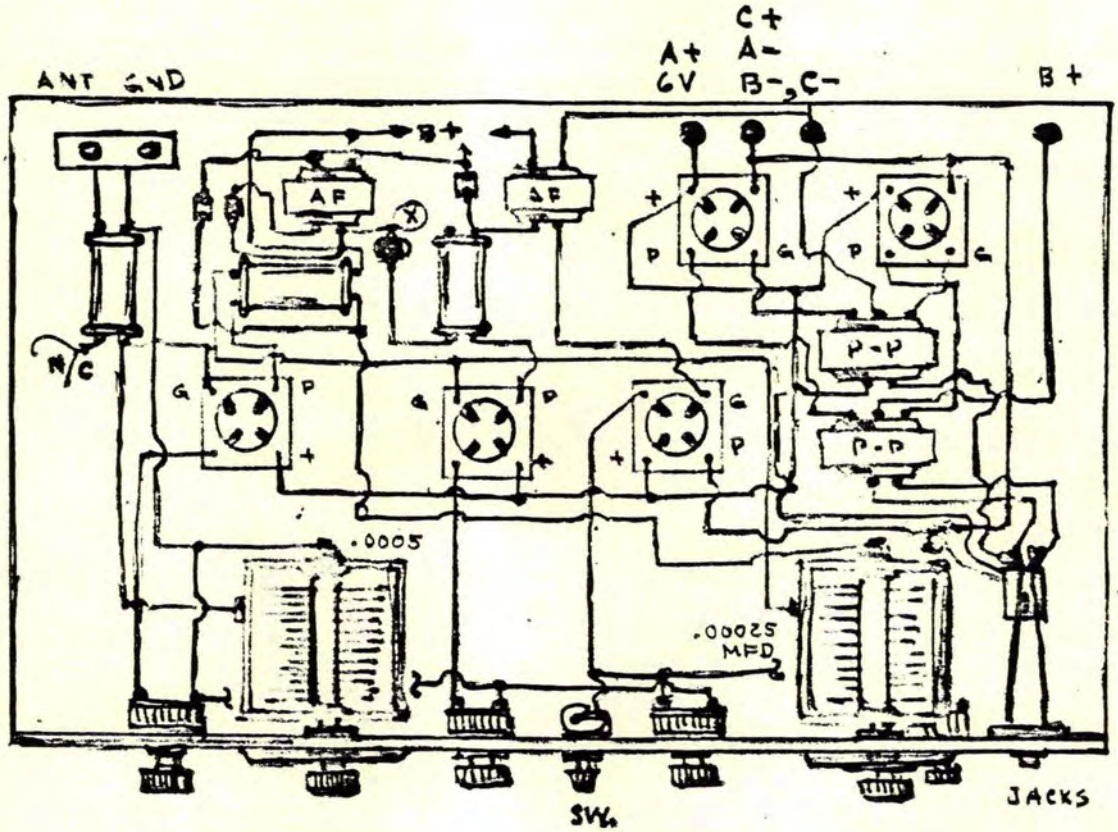

(*) = Crystal Detector. →

Refer to Sht. 2 for conventional schematic.

ERLA "SUPERFLEX" 5-TUBE RCVR., 1926
(Sht. 2)

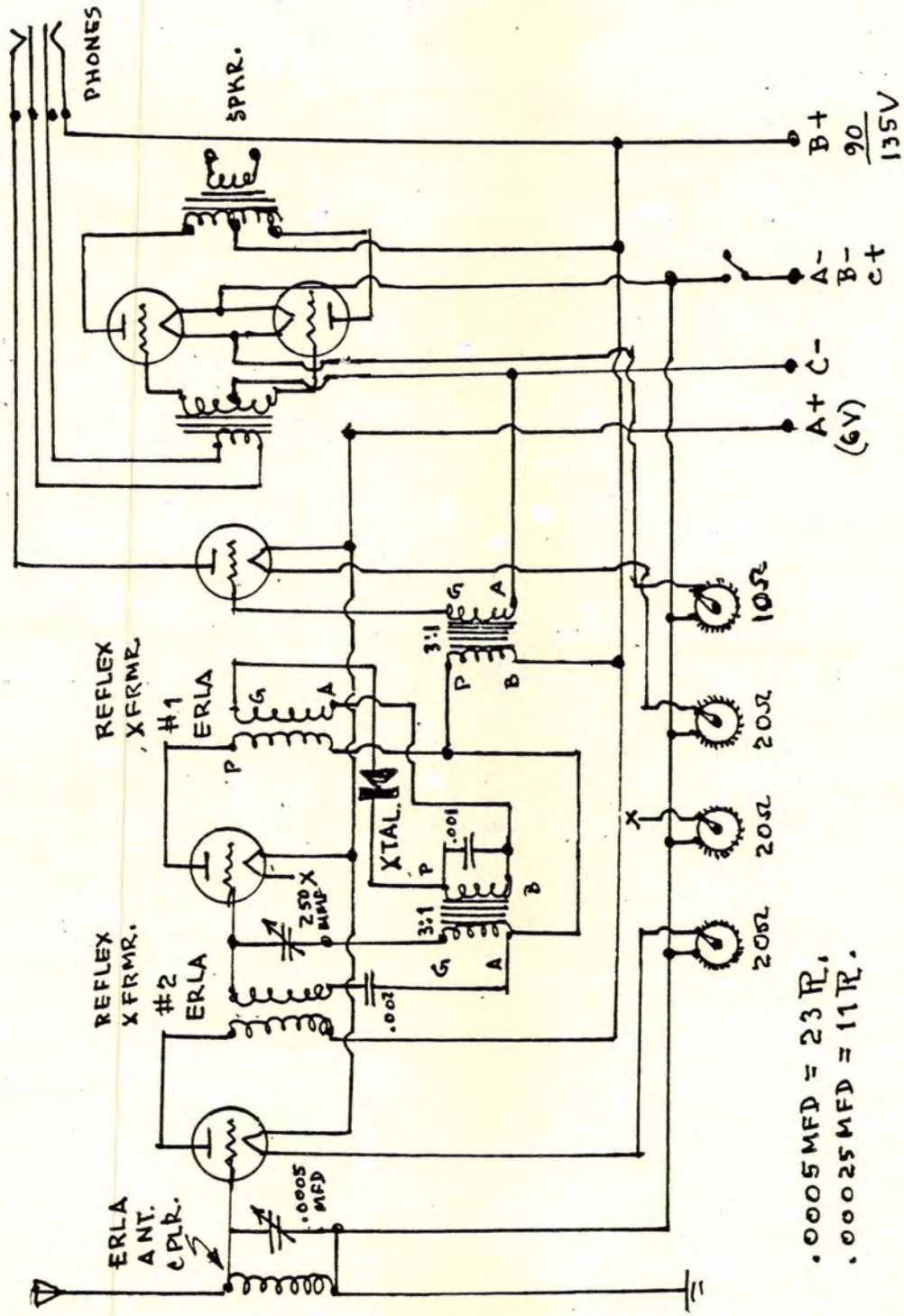

"EVERYMAN FOUR" TRF, 1927
Designed by E. Bunting Moore
Sold by Radio Kit Co. (Sht.1)

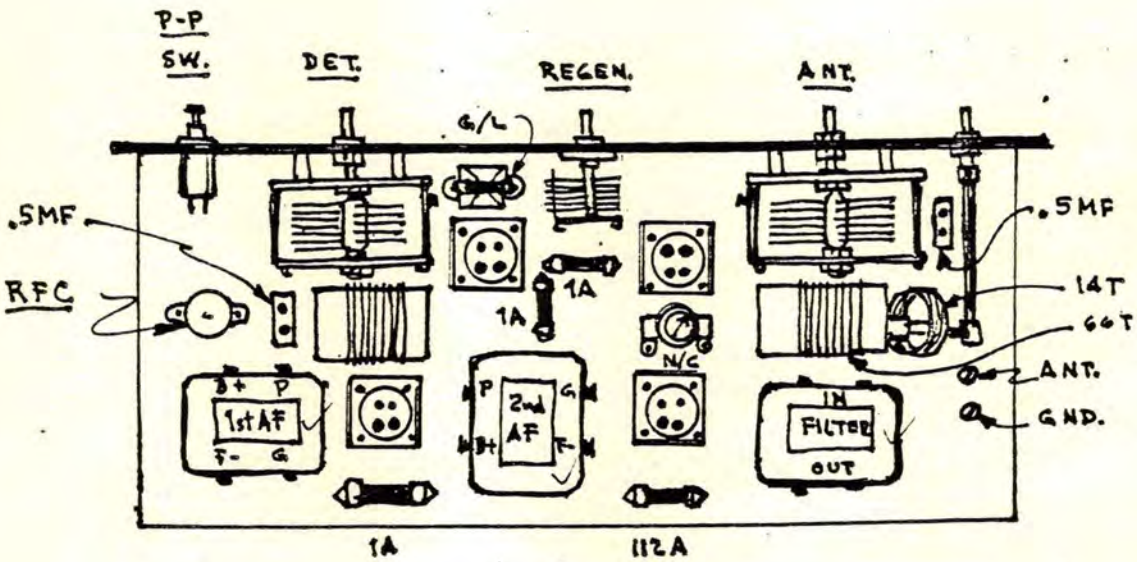

(RW 12-6/12-10-27)
(RW 3-10-28)

"EVERYMAN FOUR" TRF, 1927; Sht. 2

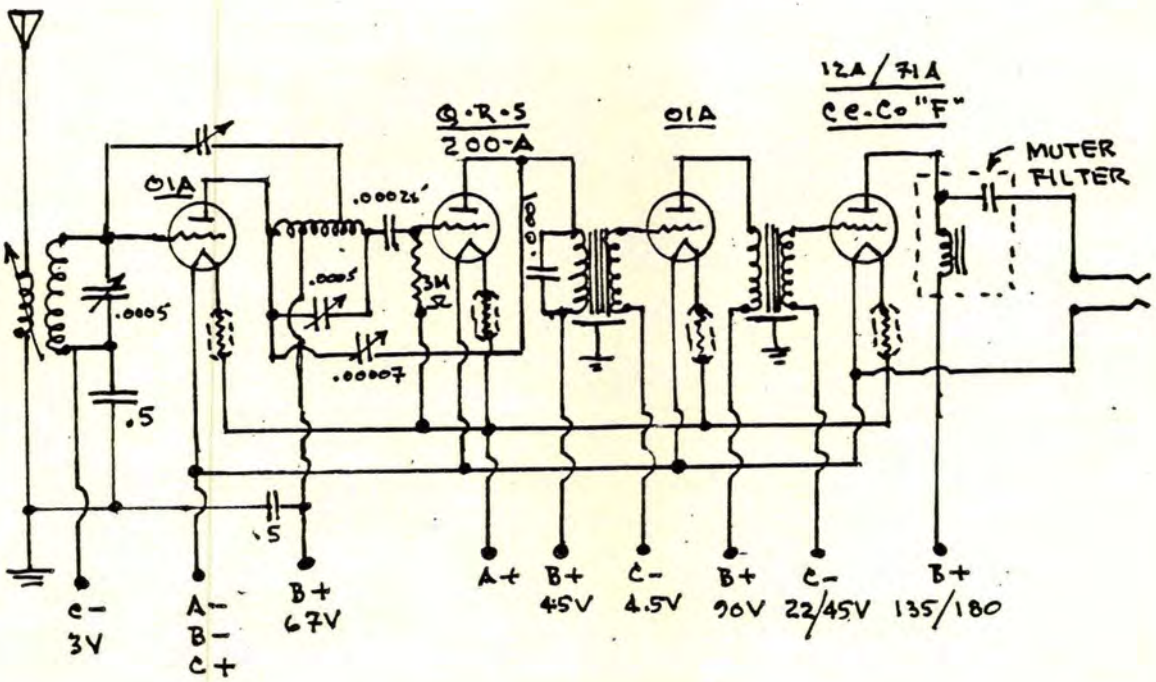

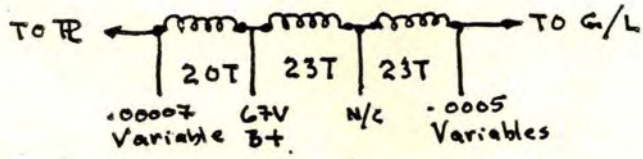

ANT COIL = PRI 14T; SEC 60T; #24 DSC; 2" Ø Coil Forms

RF COIL = 66T, Tapt at 20 & 43; #24 DSC.
(Maintain a minimum clearance all around of 1"; 2" better.)

Ground the AF xfrmrs. with a lug under one foot.
Face RF socket away from the others.
Twin coupler coils and rod.
(2) Cardwell #192-E Variable.
Cardwell #613-A Variable Condenser.
(2) Mar-Co dials.
Muter "Claifier" (impedance AF filter).
Panel = 7" x 21" x 3/16".
Baseboard = 10" x 20" x 5/8".

FADA "SPECIAL FIVE" MODEL 265, 1928
($95)

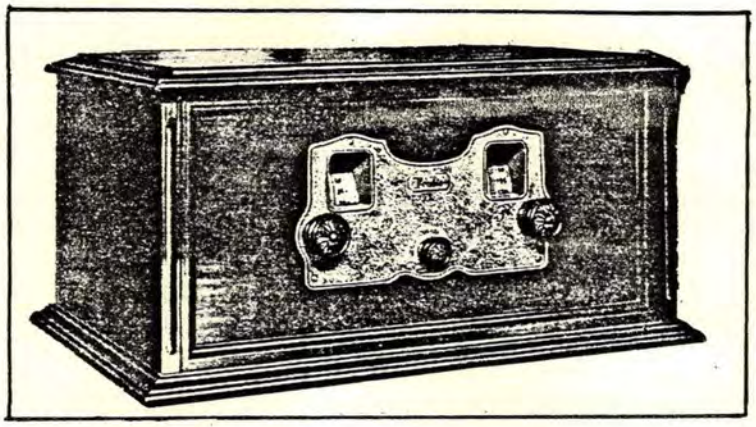

5-Tube Neutrodyne; (3) Stage RF; DET; (1) Stage AF.
Individual stages were shielded.

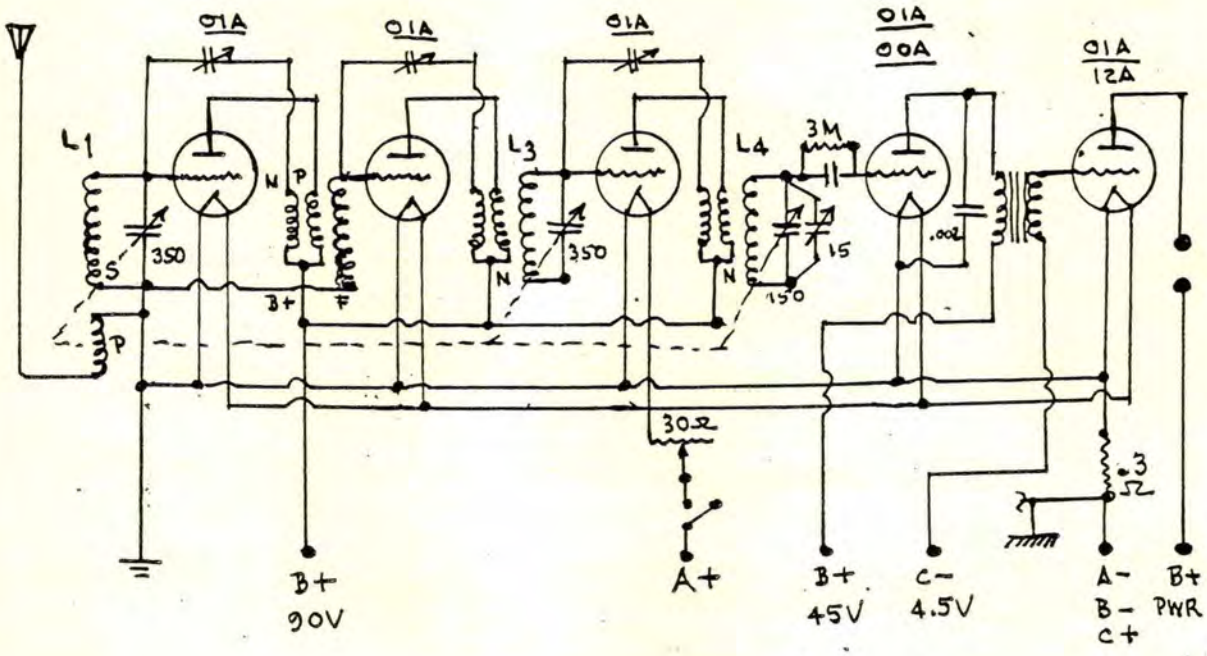

FIL rheostat & ON-OFF switch combined.
All RF coils are shielded; L2 is untuned.

Adjust on a wavelength between 250 and 300 meters, after balancing with a tube having an open filement.

FADA MODEL 170-A NEUTRODYNE, 1925

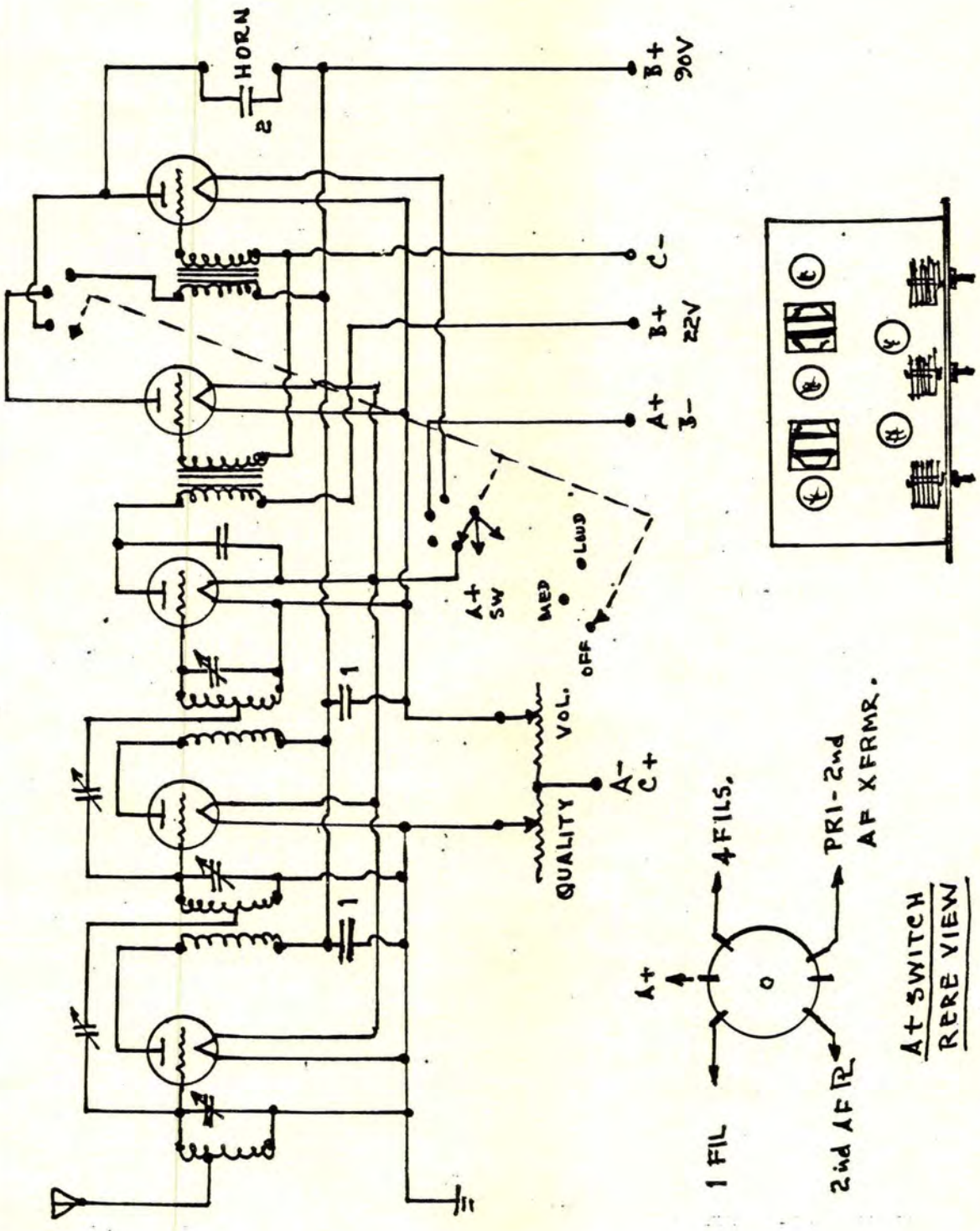

FEDERAL TYPE 59 RECEIVER, 1926

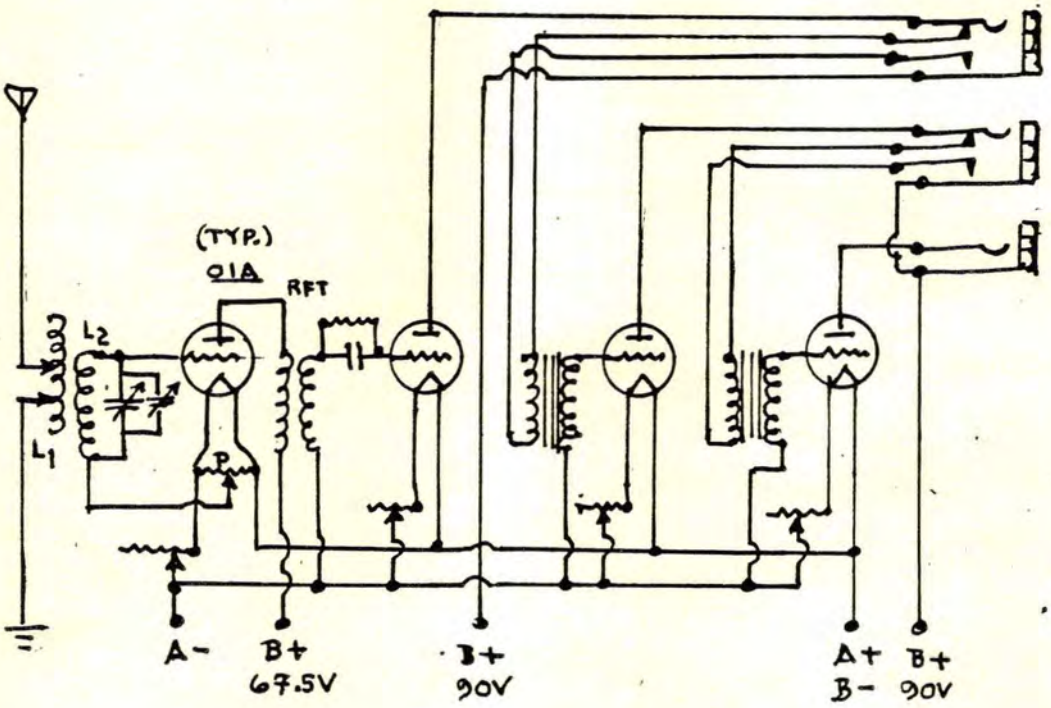

1. RCVR. NOT VERY EFFECTIVE ON DX: A RCVR. FOR LOCAL STATIONS.
2. 1A AMPERITES MAY BE SUBSTITUTED FOR RHEOSTATS.
3. ADDING A TUNED RF XFRMR. WILL AID VOLUME; RFT SHOWN IS UNTUNED.
4. L_1 = 21T, # 22 DCC, TAPT EVERY 2nd T; 3¼" ø FORM. L_2 WOUND ON SAME FORM w/ ¼" SPACE; 45 T, #22 DCC.
5. P = 200/400 Ω. (Controls oscillation of RF tube.)
6. FIL RHEOS. = 10 Ω (4).
7. AF XFRMRS. = 2:1 RATIO (2).
8. PADDER = .00004 MFD MIDGET VARIABLE.
9. VARIABLE = 250 MMF.

FEDERAL "ORTHOSONIC", 1926

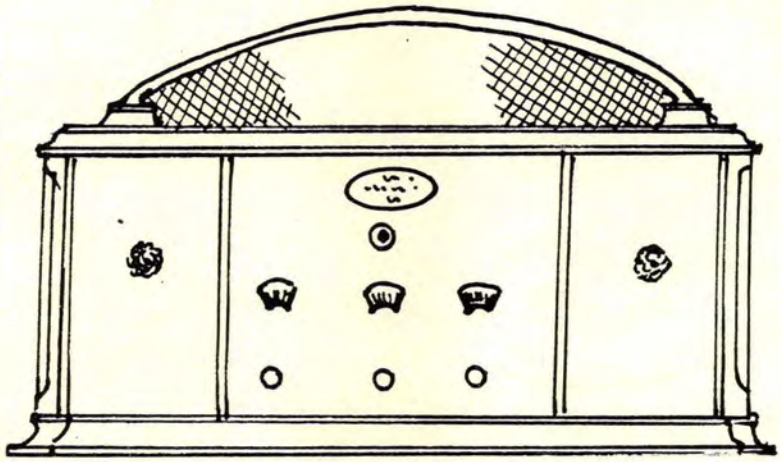

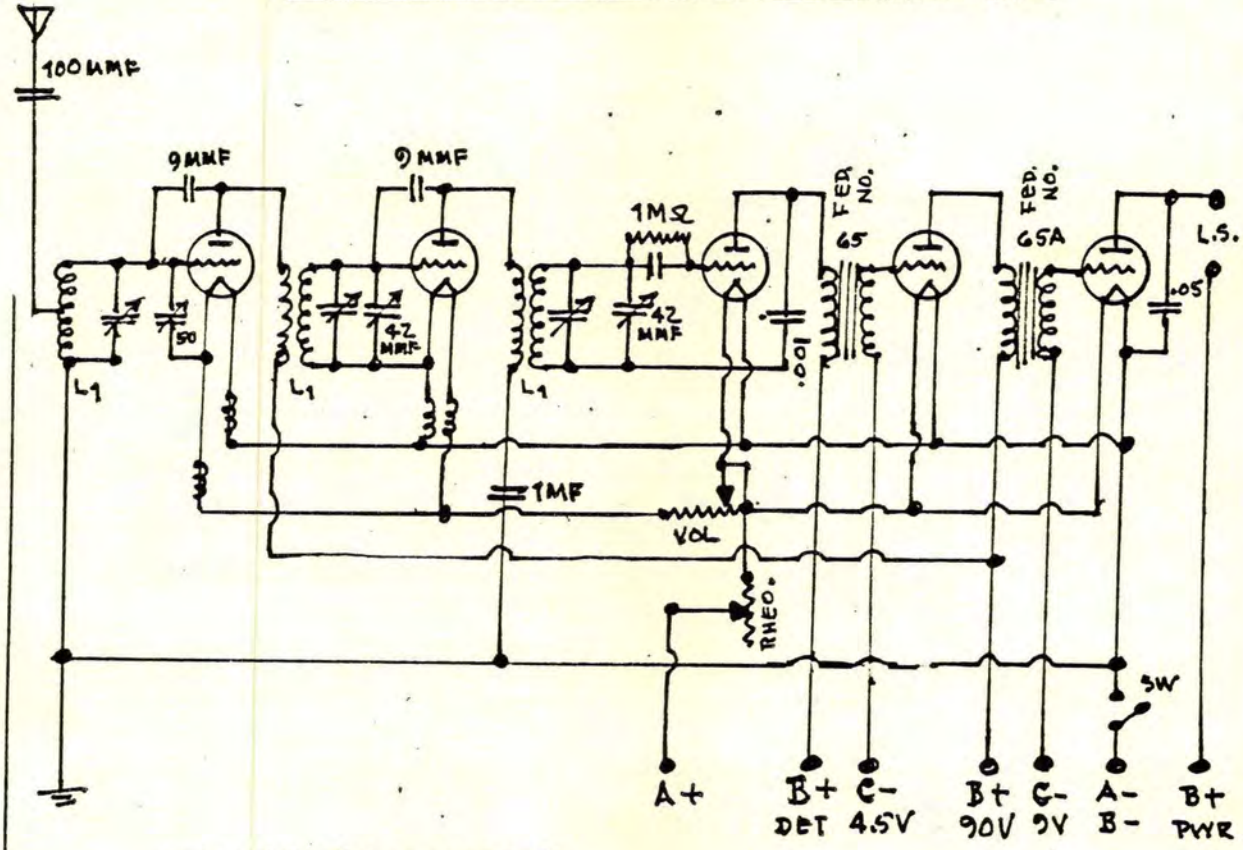

VARIABLES = .0005 x3
COILS L_1 = 165 mH x3

(RC 1-30)

FERGUSON TRF RECEIVER, 1926; 6-TUBE

Dial Was In Wave-Lengths.

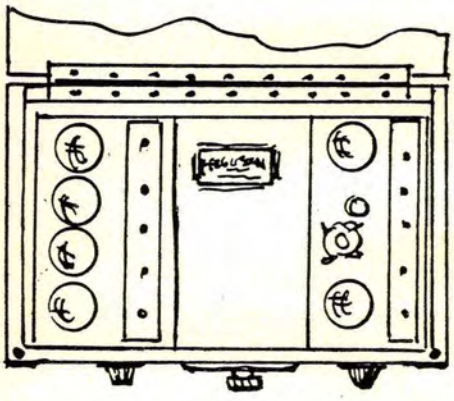

TOP VIEW-LID UP
(Model 10)

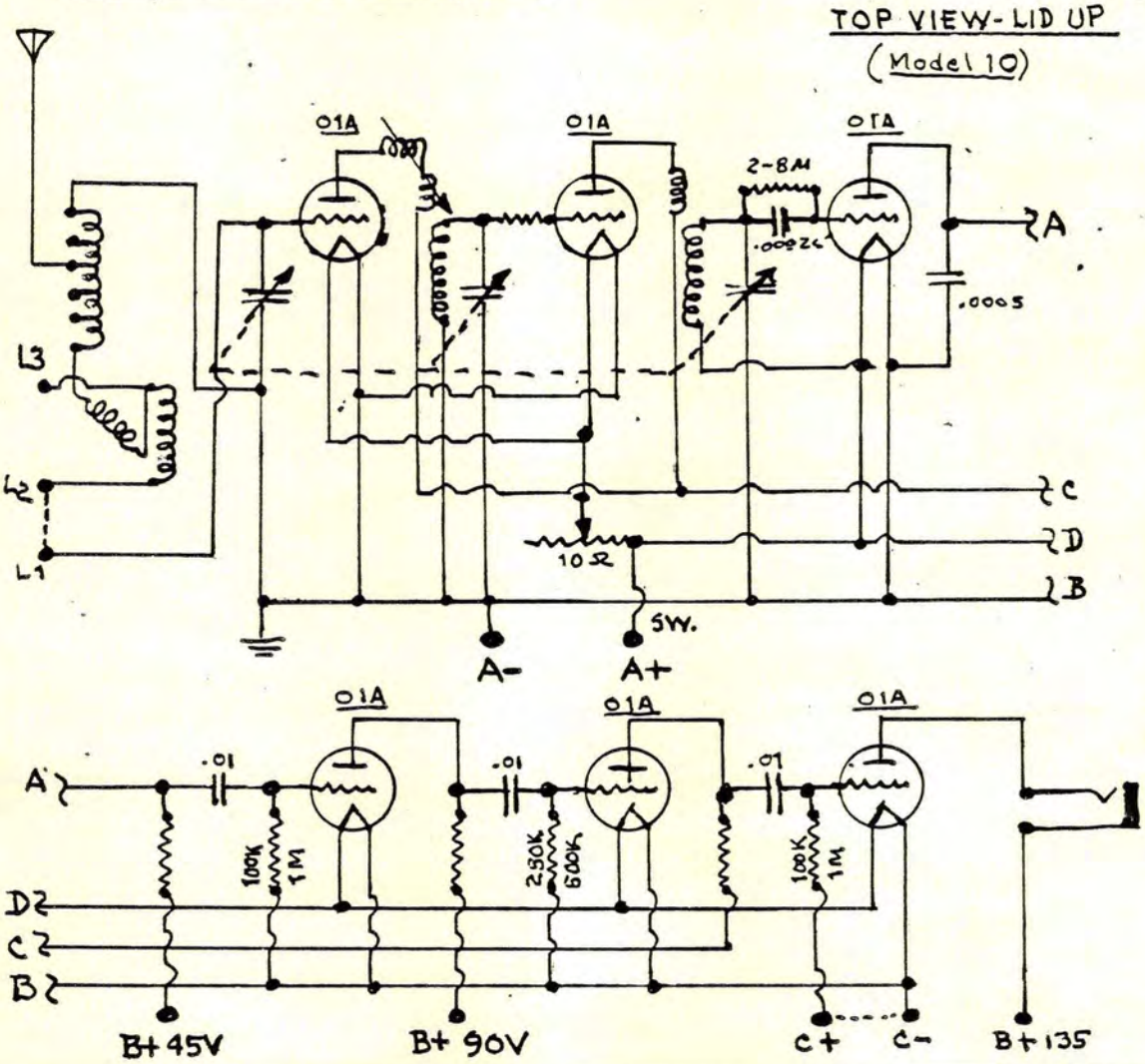

(Sht. 1) CLYDE J. FITCH's "TROPADYNE" SUPER-HET, 1925

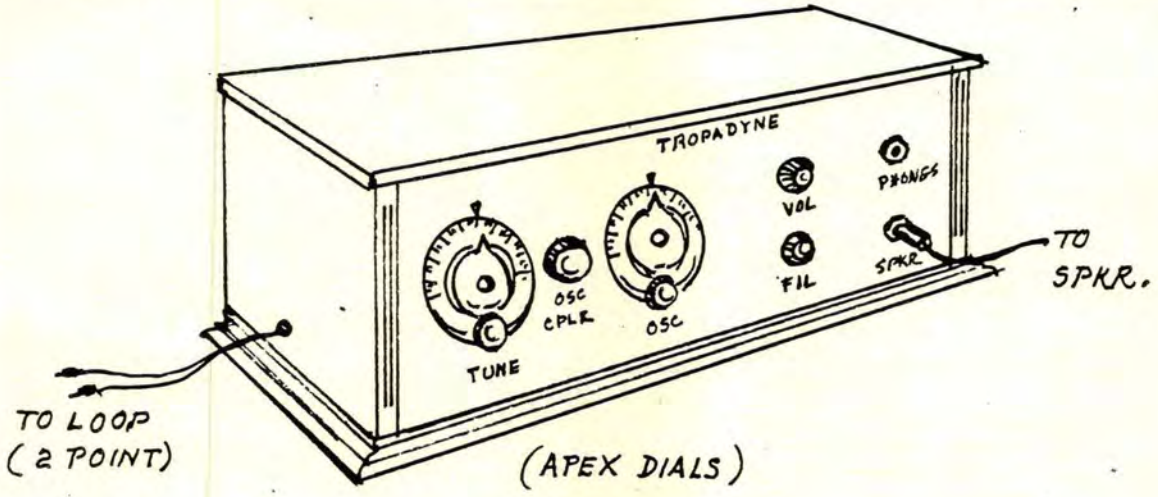

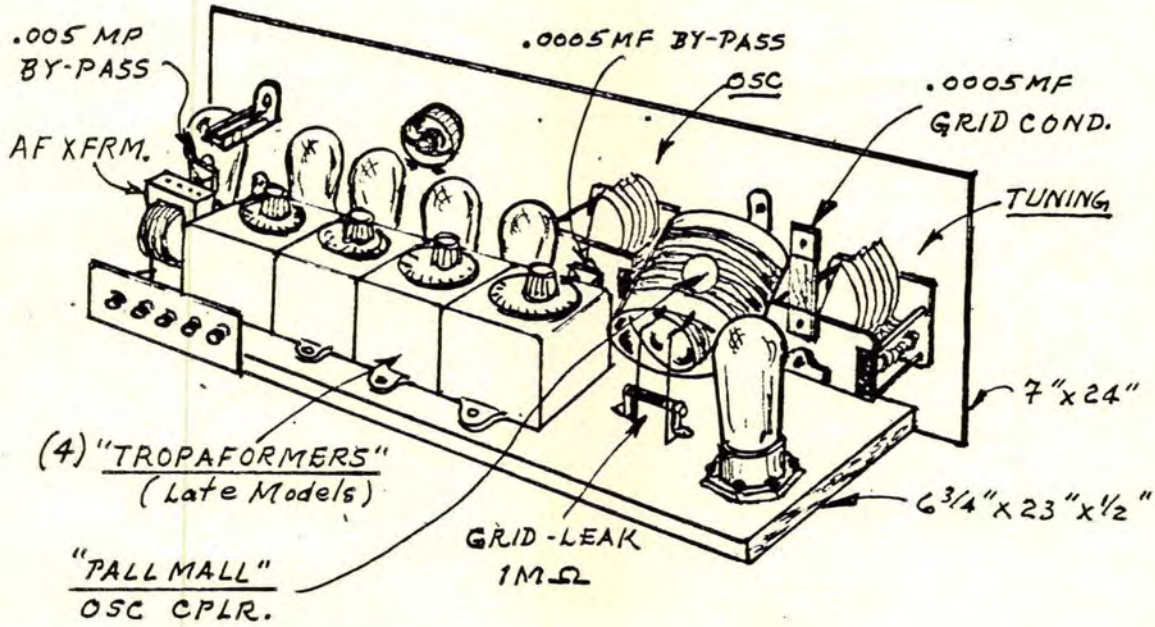

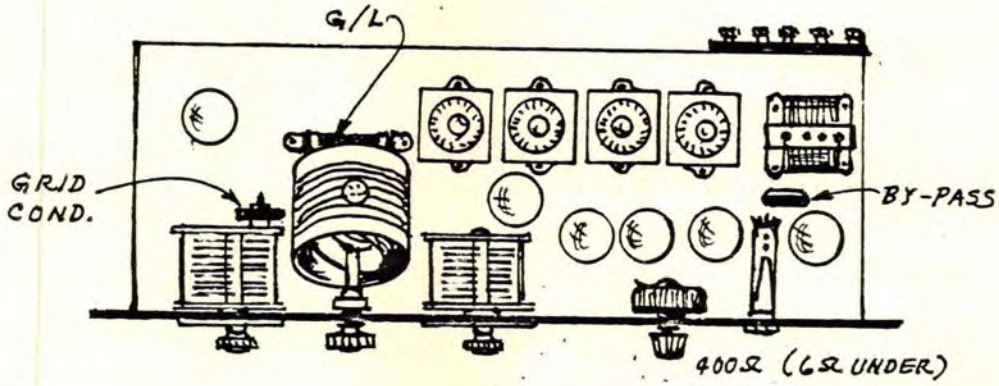

(Sht. 2)

CLYDE J. FITCH's "TROPADYNE" SUPER-HET, 1925

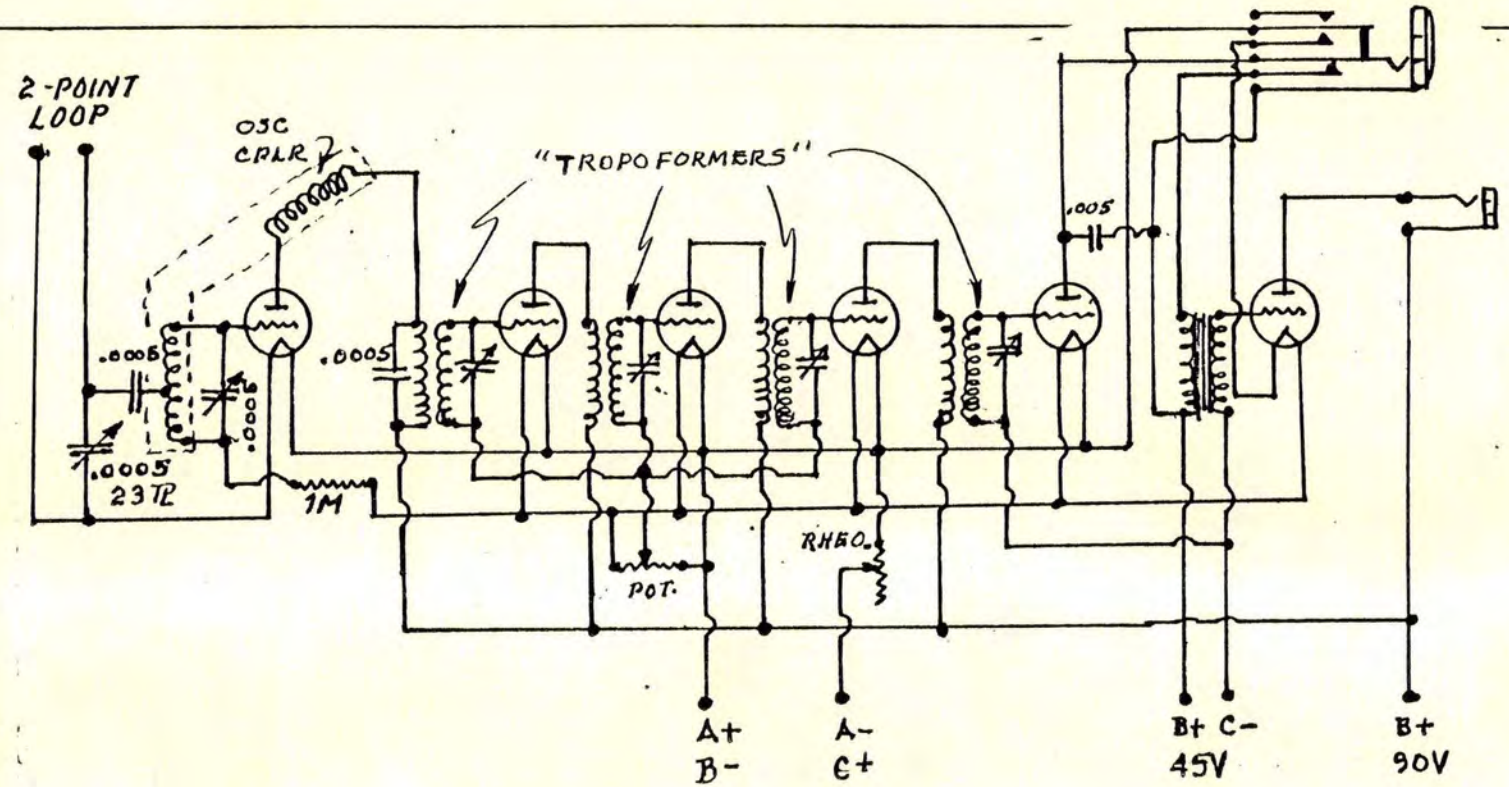

PARTS LIST: (2) APEX Dials.
ACME B-2 AF Xfrmr.
Rheostat - 6-ohms for 01As.
30-ohms for V99s.
400-ohm Pot.
Grid-Leak may be ¼ or ½-Megohms.

ADJUSTING THE "TROPOFORMERS": Set all 4 dials at 50. Tune in a station. Tune one xfrmr. at a time for loudest reception. Rotate pot. for clearest signal.

NOTE: Full-scale copies of original blue-prints for constructing the "TROPODYNE" are available from Olde Tyme Radio Co. for $10 a set.

(Sht. 3) CLYDE J. FITCH's "TROPADYNE" SUPER-HET, 1925

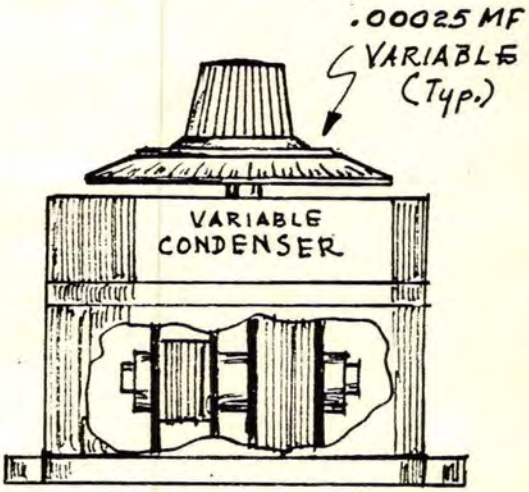

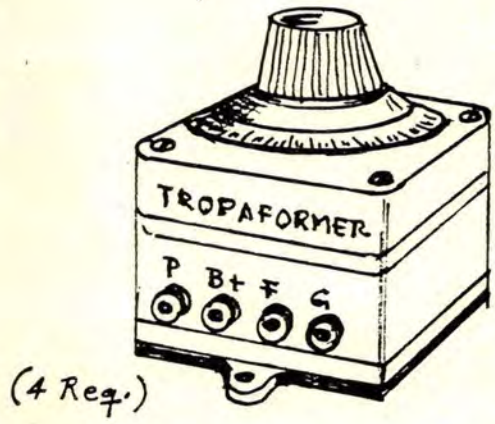

MOULDED HARD RUBBER BOX: WOOD MAY BE USED IF YOU WIND YOUR OWN COILS.

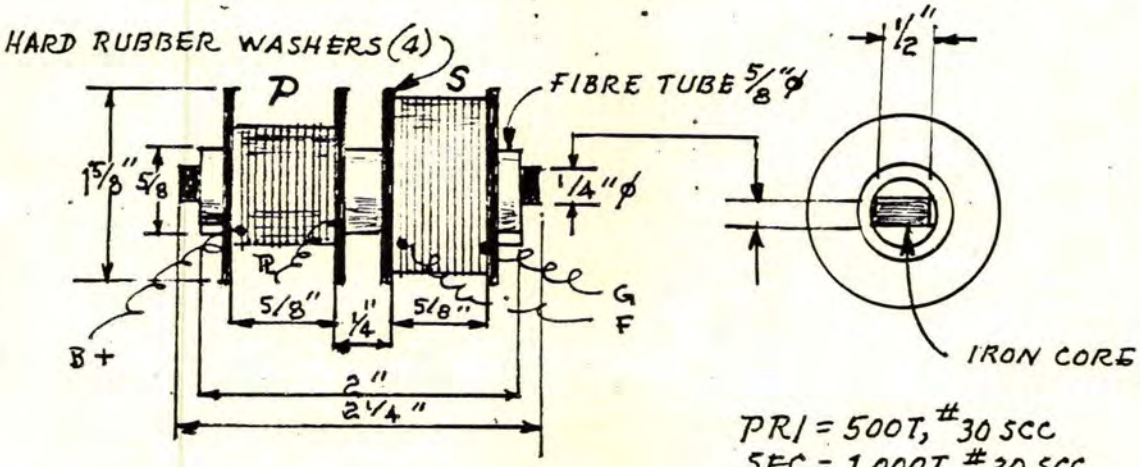

PRI = 500T, #30 SCC
SEC = 1,000T, #30 SCC

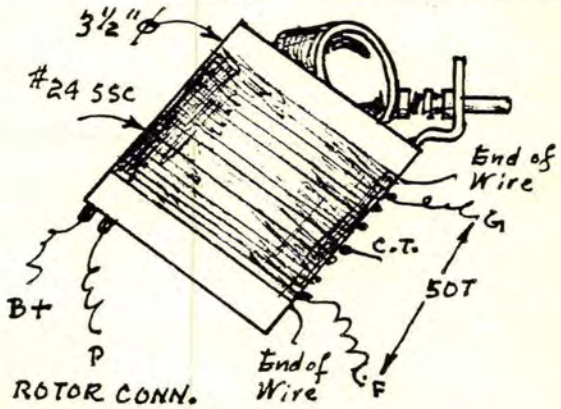

OSCILLATOR COUPLER DETAILS

"PALL MALL" brand coupler used by Fitch. Any good quality Vario-coupler may be used.

The ROTOR was used as a TICKLER.

Covered all BC. bands.

FLEWELLING SUPER-BOOSTER, 1925; Sht. 1

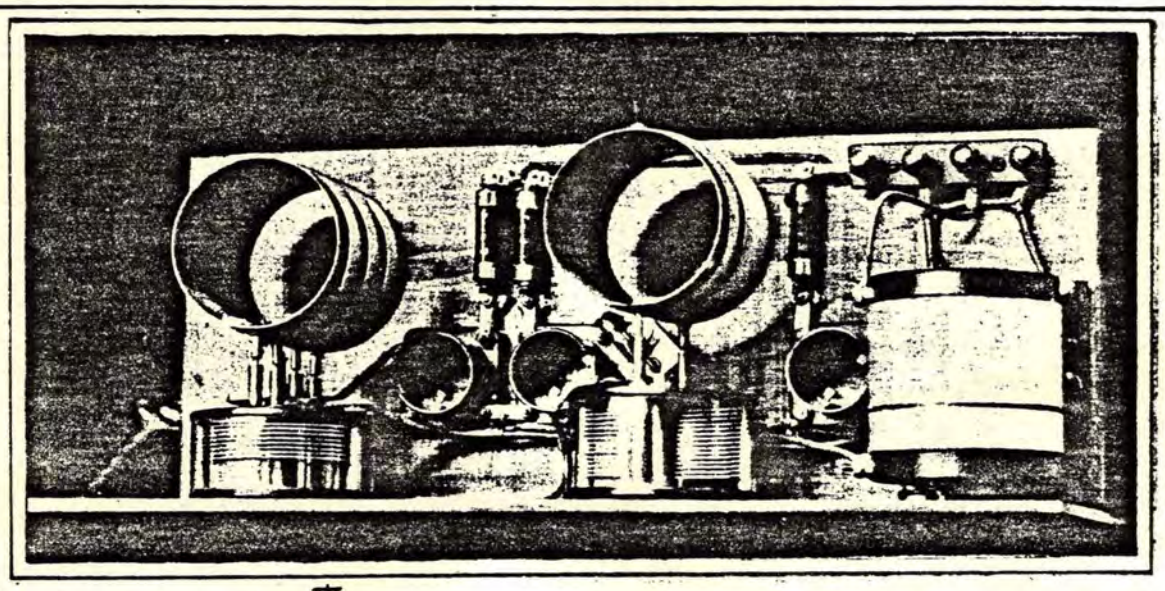

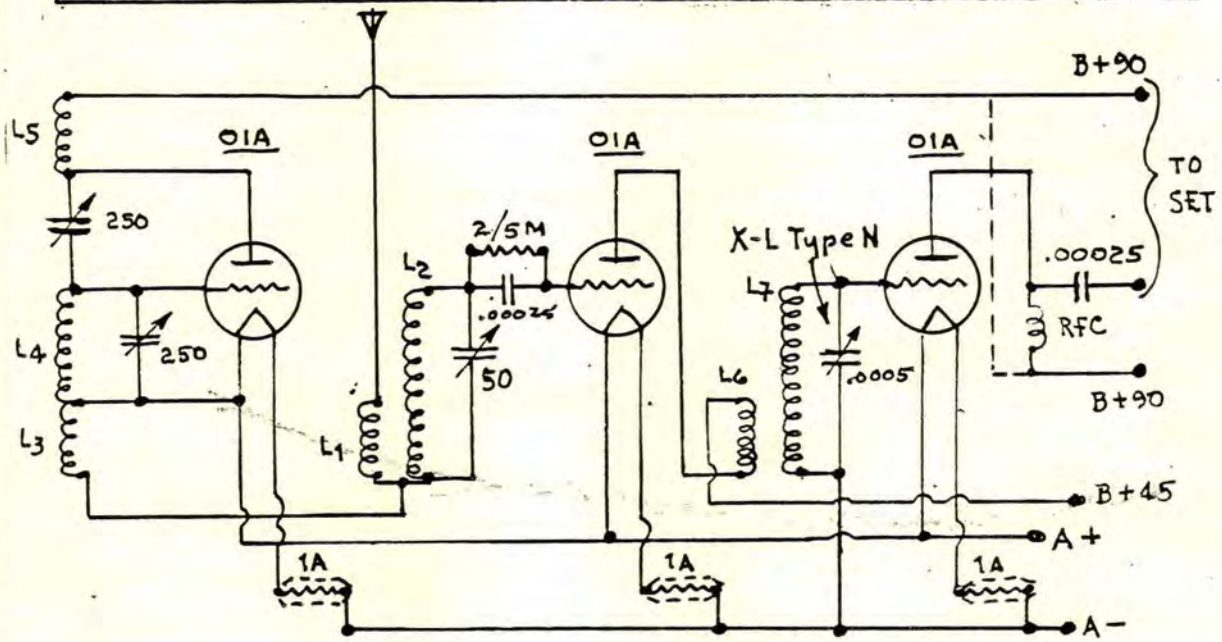

COIL DATA

3"Ø FORMS, 3½" LONG	L_1 = 10T, No. 24 DCC;	L_5 = 16T	SPACING ½"
	L_2 = 50T	L_6 = 25T	BTWN. COILS,
	L_3 = 10T	L_7 = 55T	EXCEPT L_1-L_2,
	L_4 = 16T	L_8 = 20T	L_6-L_7.

THE GREATER DISTANCE BTWN. L_1 & L_2 = GREATER SELECTIVITY.
L_6 & L_7 ARE CLOSELY CPLD.

FLEWELLING "SUPER-BOOSTER", 1925
(Sht. 2)

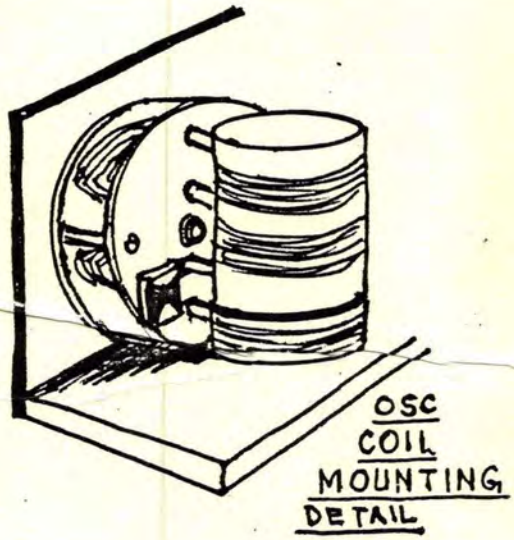

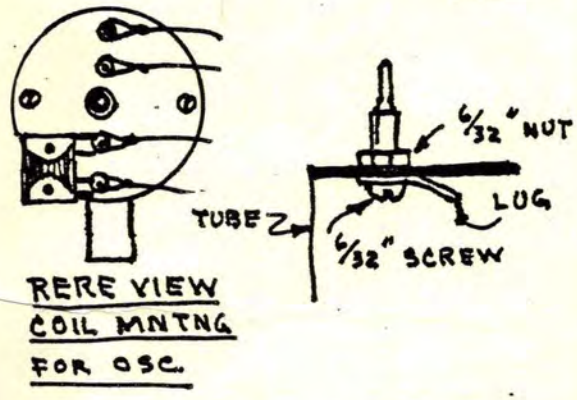

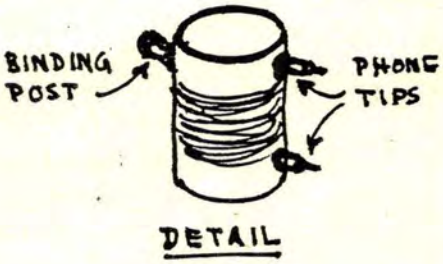

NOTE

Coils were originally designed as plug-in types. Jacks were screwed into Variable terminals; 2 holes drilled into back plate for OSC. The phone tips were soldered into coil terminals, to align with jacks on Variables.

WARNING!

Remove GND from receiver when using a loop.

Set receiver dials for 600 meters.

COIL DATA

RFC = 100T #30 DCC, single layer, on 3"Ø form.
If RFC & .00025 are used, B+ 90V at top of diagram goes to bottom of RFC. Single wire with arrow only to set.

L8 = (optional): 20T #22/#24 DCC wound directly on first coil in set.

(RITH 11-25)

FLEWELLING SINGLE CIRCUIT RECEIVER
220 - 550 Meters 1927

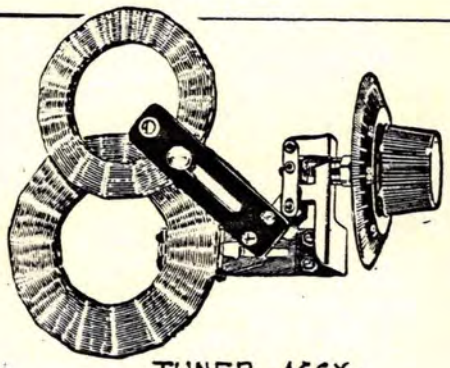

TUNER ASSY.
TYPE "S"
(7.25)

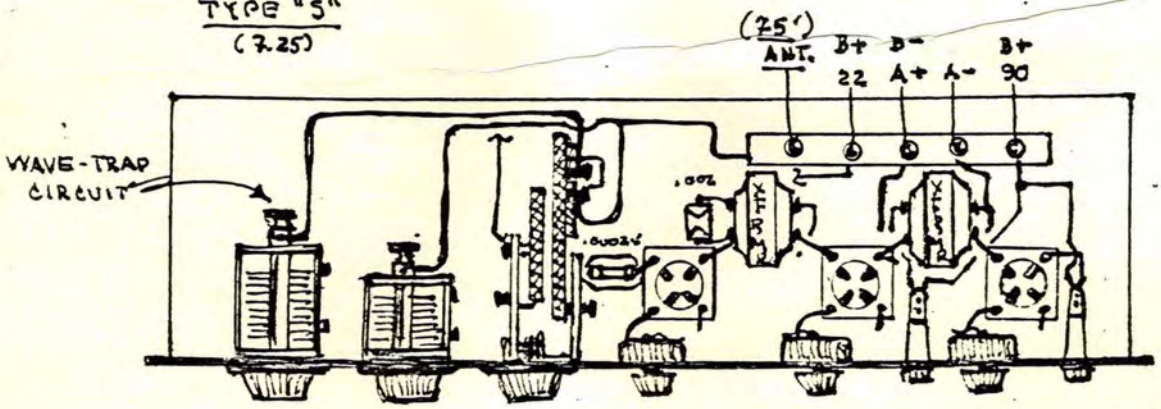

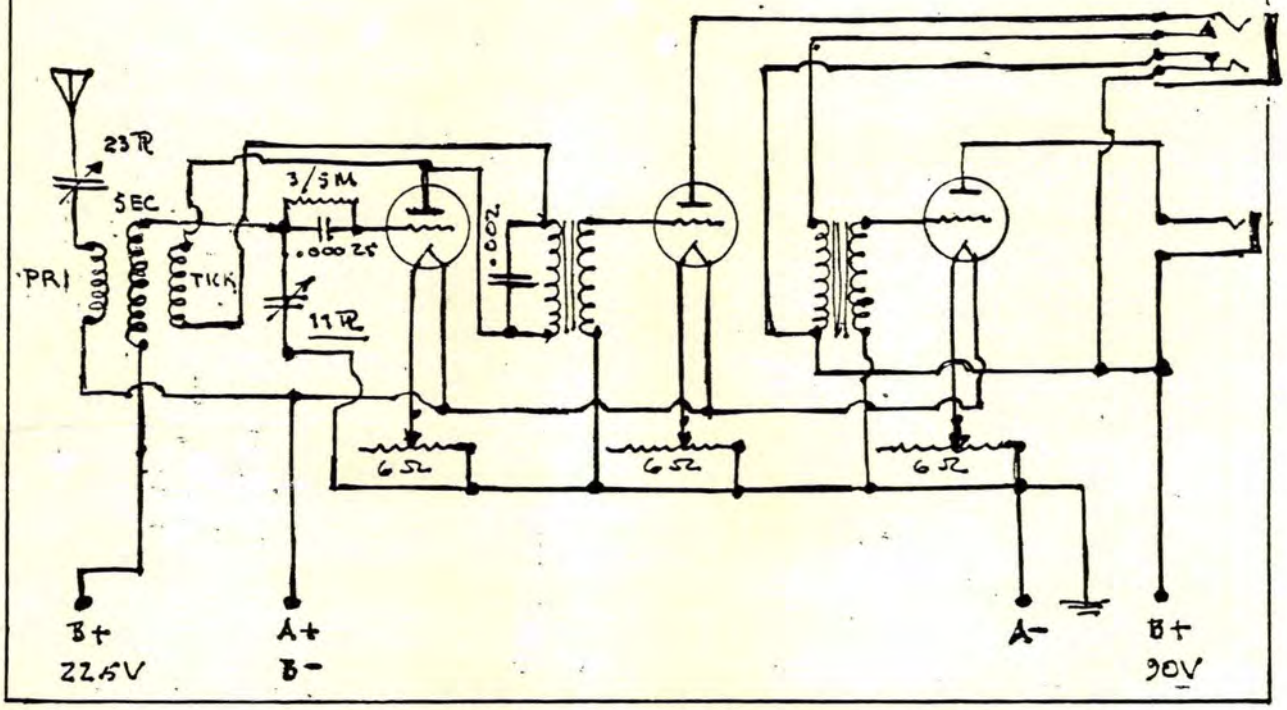

FLEWELLING SUPER-REGENERATIVE, 1928

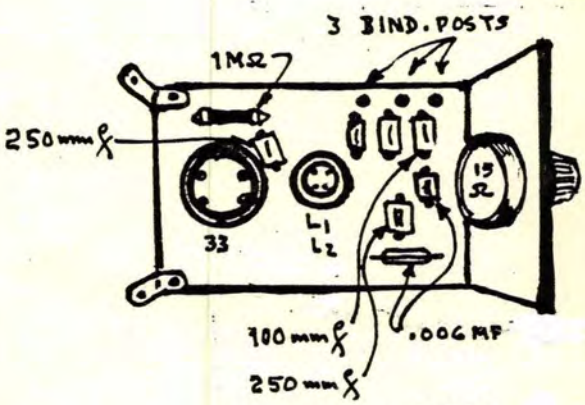

BOTTOM VIEW

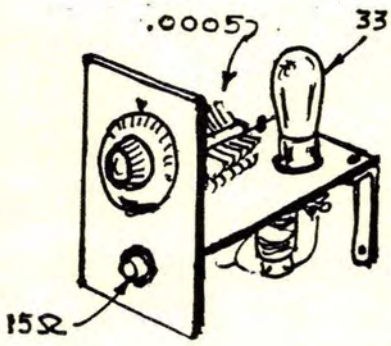

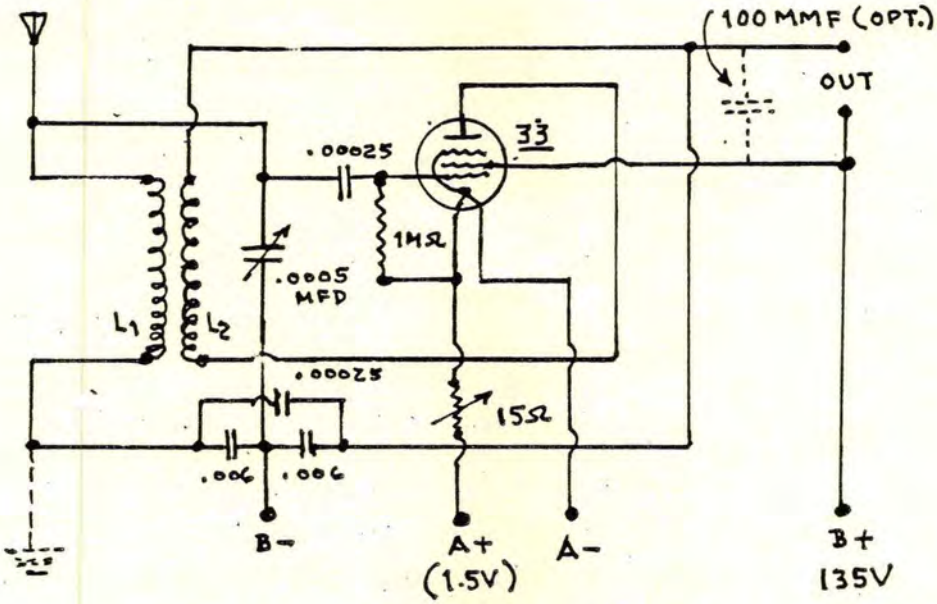

COIL DATA: (FORM = 1"ø x 3")

L_1 = 110T, #32 Enamelled.
L_2 = 45T, #36, DSC: Wound below GND end of SEC(L_1).

L_1 = 75T, #32 Enamelled.
L_2 = 50T, #36, DSC.
} COIL FORM = $2\frac{1}{2}$"ø.

NOTE: INSENSIVITY MAY BE DUE TO REVERSED L_2 CONNEXIONS.

FREED-EISEMANN's "UNKNOWN ORPHAN", 1925

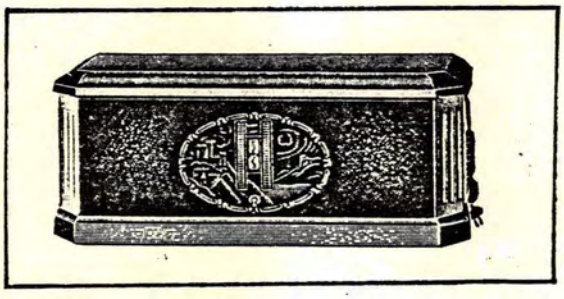

Model 80

In terms of a collectable item, the TRF shown above is a truly rare item. It was Freed-Eisemann's first attempt at what was called "a socket-powered" set. It was strictly for DC mains. The metal cabinet measured 11" x 20" x 8½", finished in a bronze colour, very dark. The brass escutcheon mounted the volume control, a drum dial for a 4-gang condenser, and a snap switch. The volume control was shunted - i.e., connected - across the aerial and ground. The specifications are listed below:

Four stages of tuned radio frequency.

Detector using the 01A.

One stage of transformer-coupled AF, using a 71A.

One stage of P-P amplification, also using 71As.

While I've never thought of myself as a "collector", nor do I have any special interest in F-E marques, I would like to see the receiver shown, if only to trace out its circuitry for my own edification - and perhaps for others.

* * *
* *
*

FREED-EISEMANN MODEL FE-15, 1926

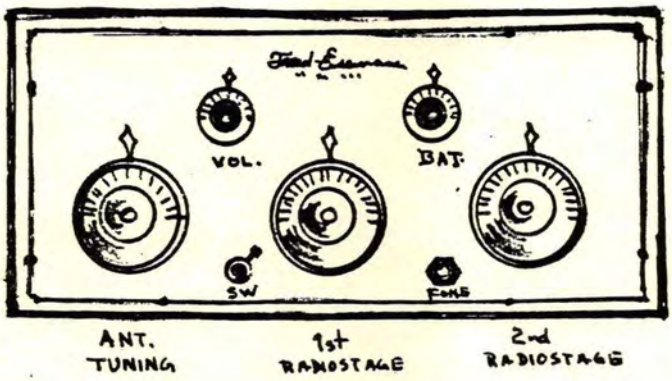

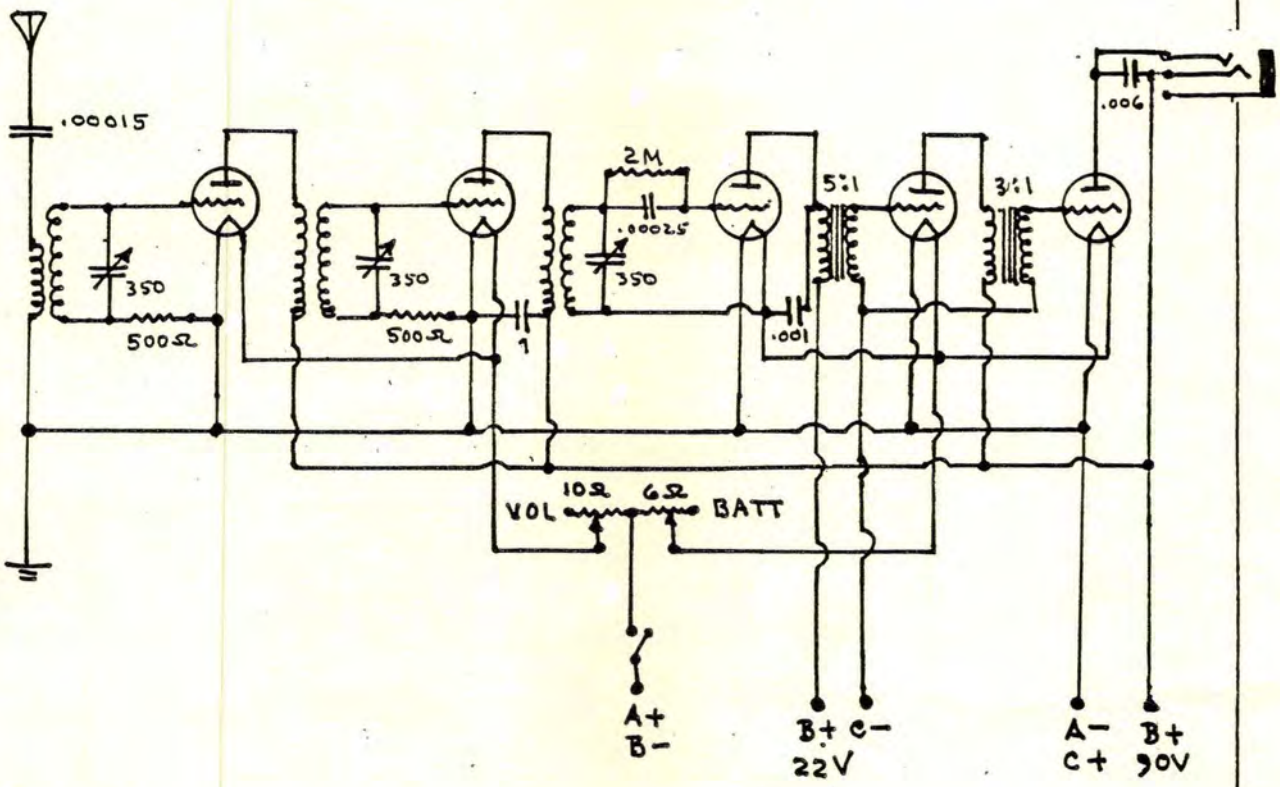

FREED-EISEMANN Model 48 RECEIVER
(Models FE-30, 30N, 40N Similar.) Sht.1

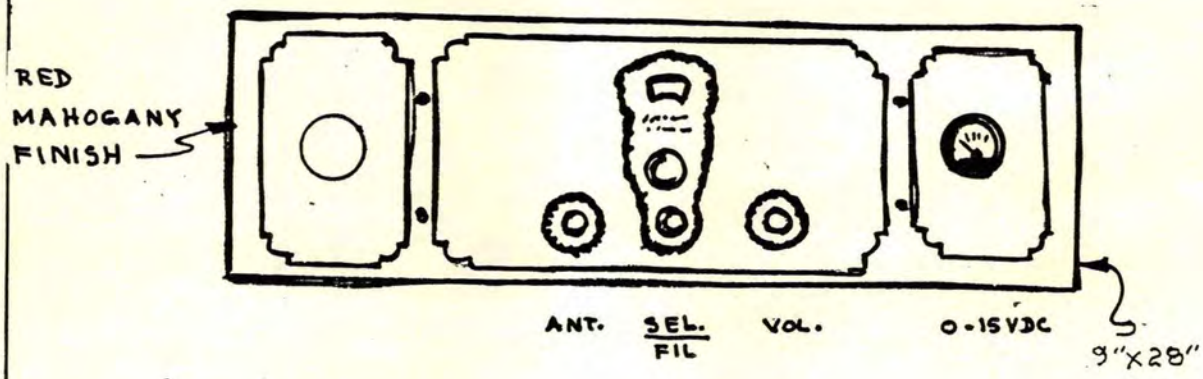

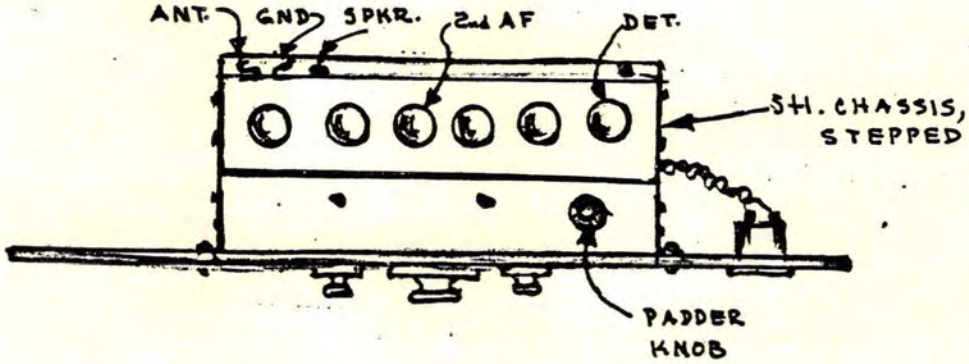

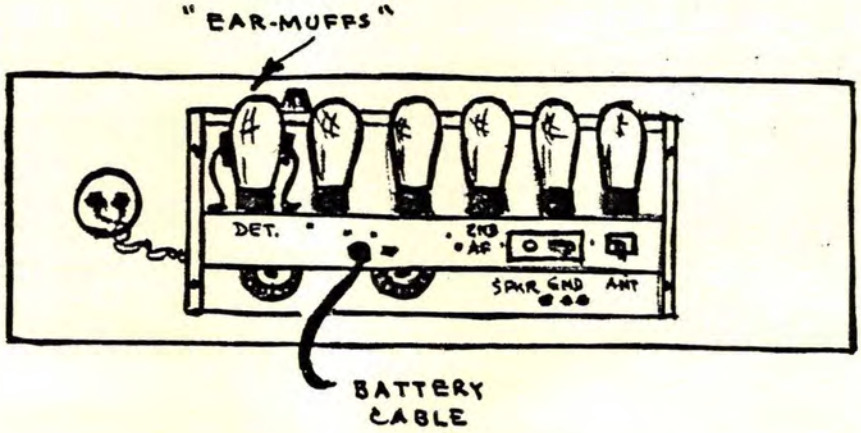

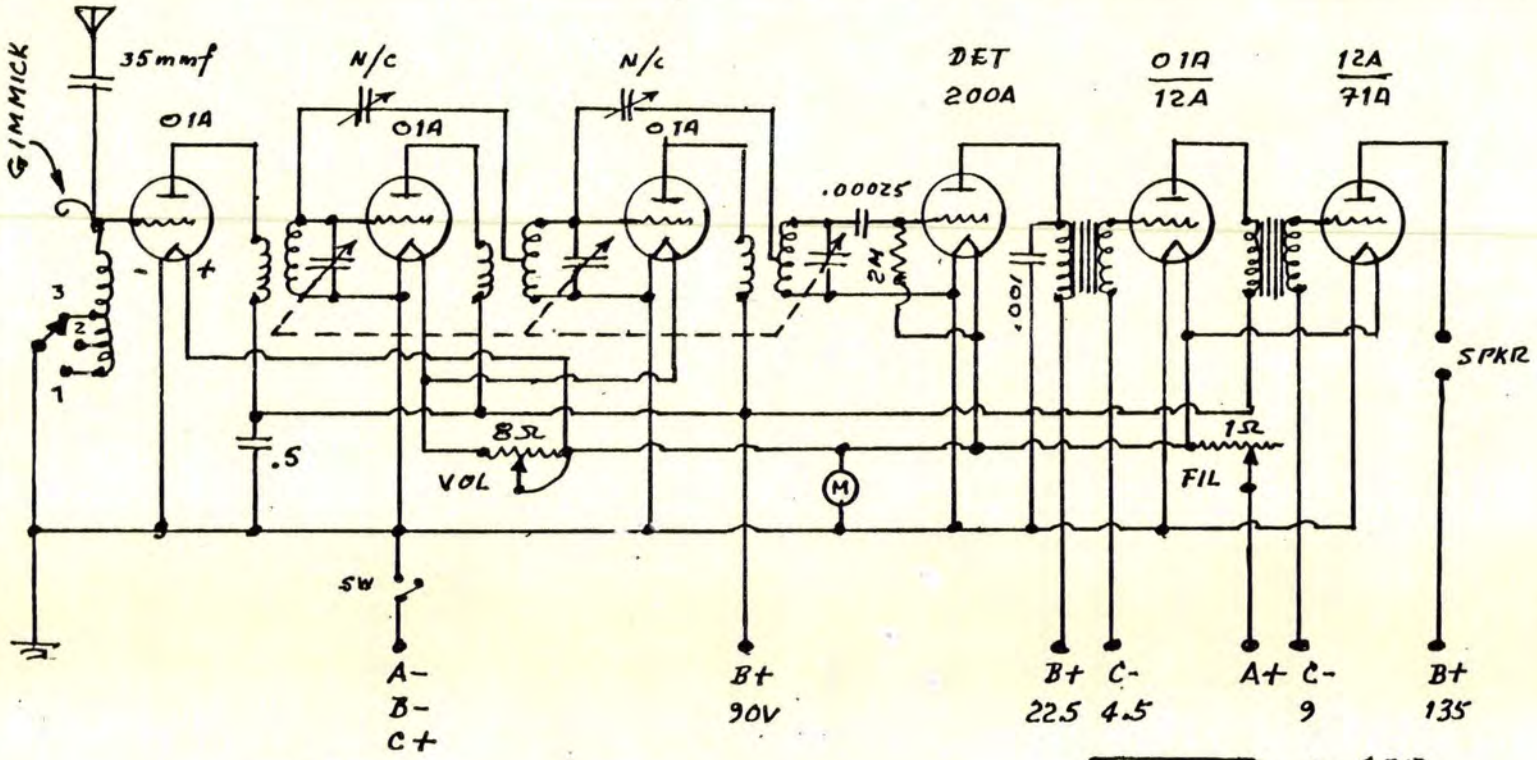

NOTES

1. 3-Gang Variables, 320 mmf each sexion.
2. C-9V can go to C-27V.
3. FIL rheostat 2A capacity.
4. VOL " 0.5A "
5. All Rotors grounded.
6. Meter = 0-15VDC.

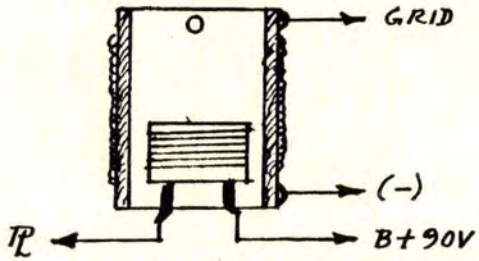

TYPICAL CROSS-SEXION of RF COILS

(F-E Model 48)

See Sht. 3 for Variant.

FREED-EISEMANN Model 48, 1928; Sht. 2

FREED-EISEMANN Model 48, 1928; Sht. 3

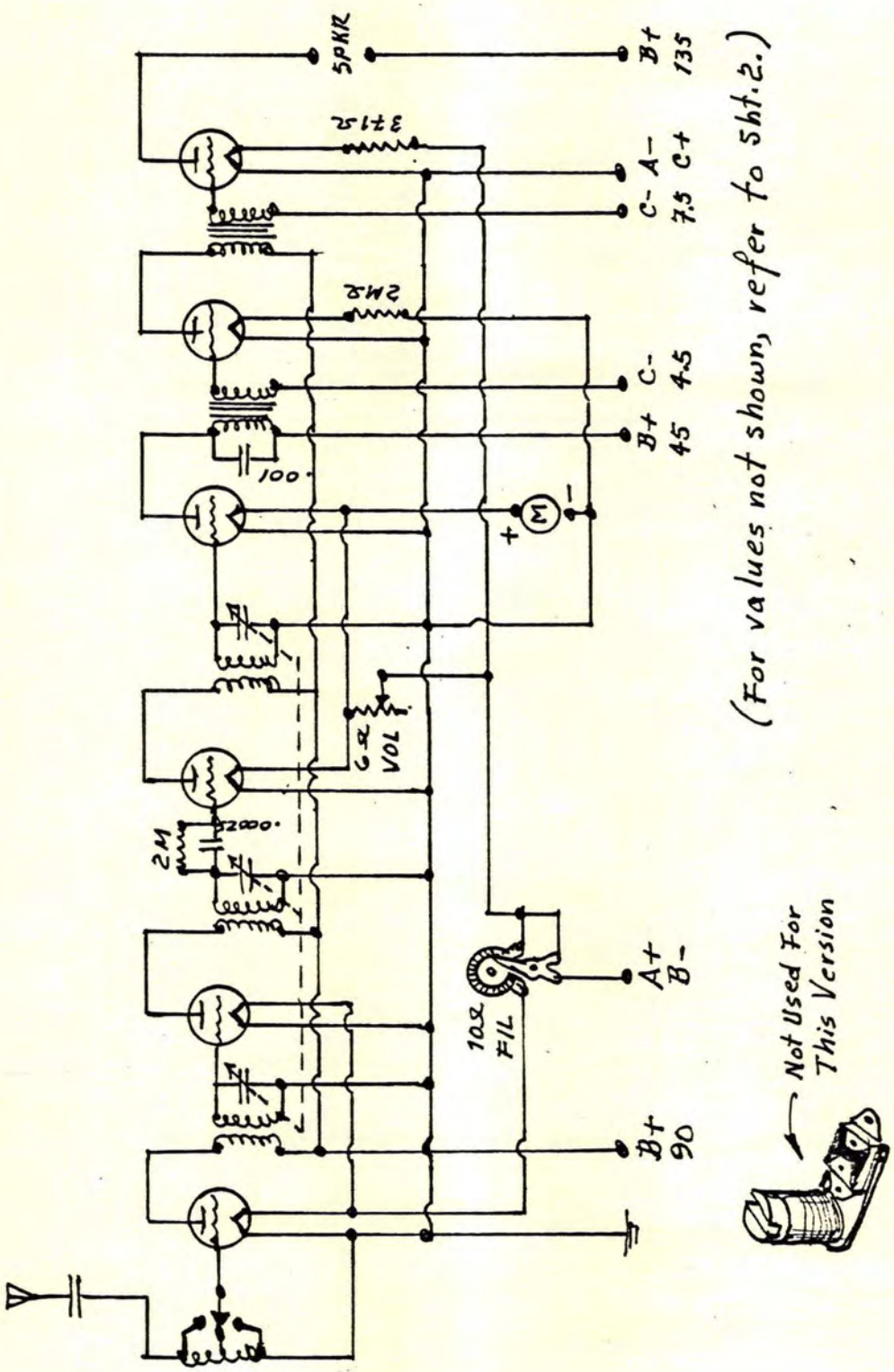

ELECTRIFYING THE FRESHMAN "MASTERPIECE"
(Sht. 1)

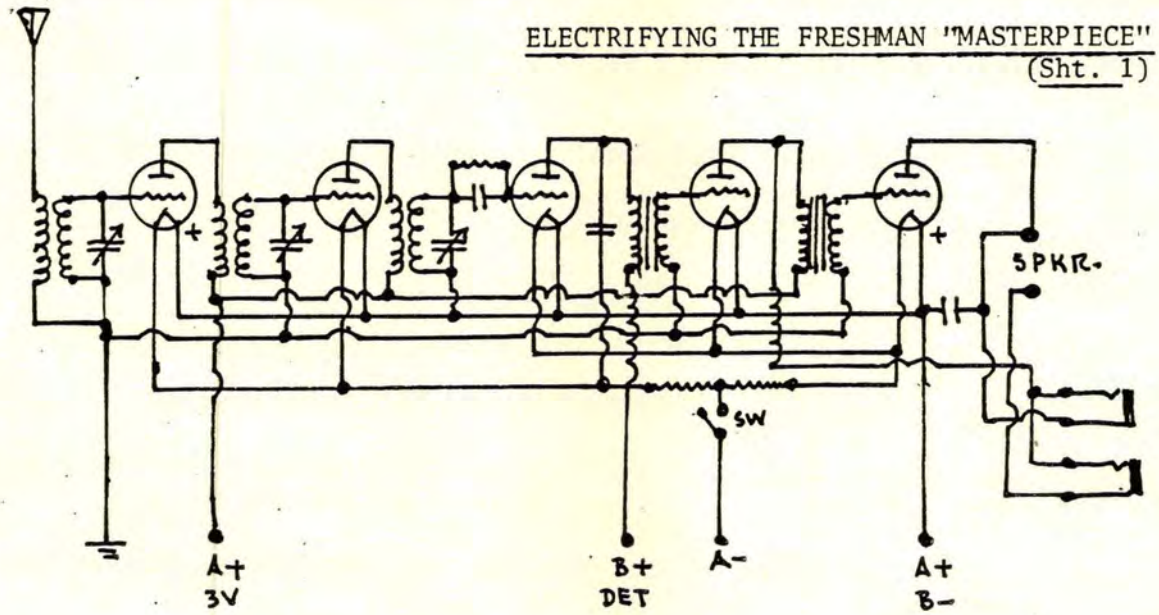

ORIGINAL WIRING

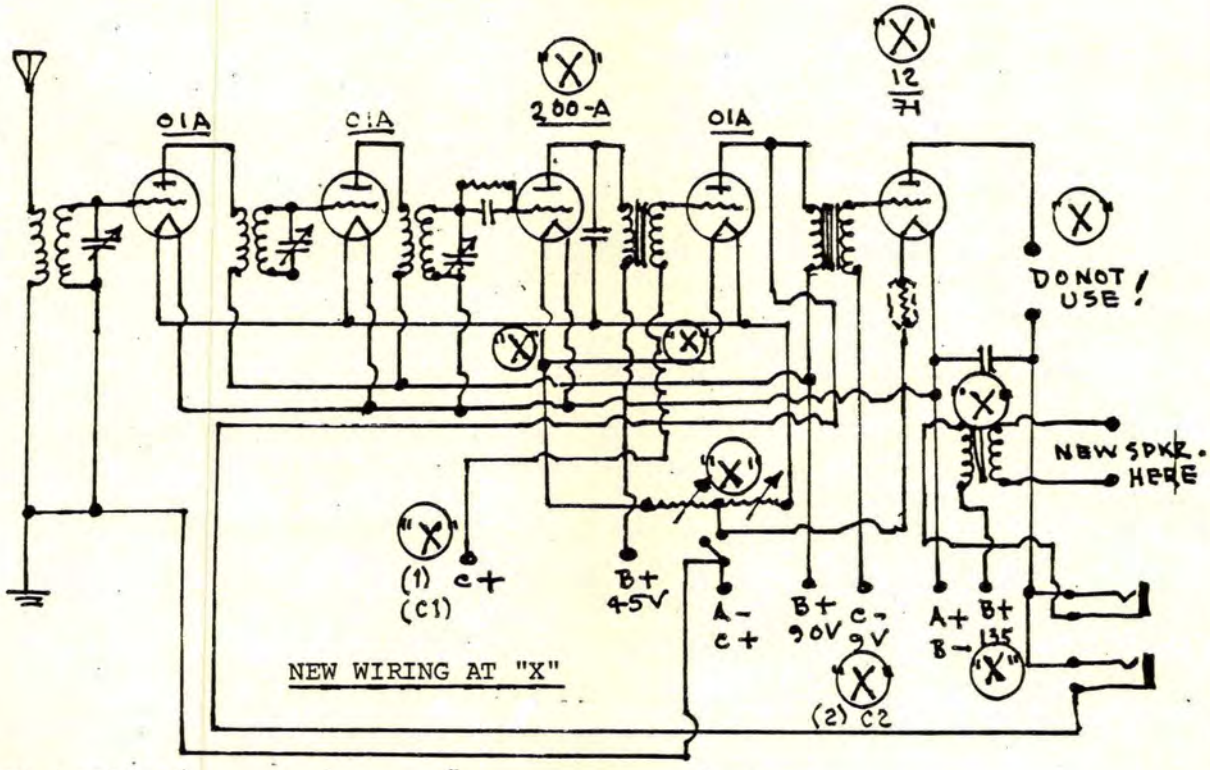

NEW WIRING AT "X"

(RB 4-27)

ELECTRIFYING THE FRESHMAN "MASTERPIECE" (Sht. 2)

1. Phone jack on rcvr. front panel is used when power amplifier of the single-stage variety is used in place of the 2nd stage amplifier. The 2nd stage amplifier should then be removed.

2. The 200-A tube is suggested as a new Detector.

3. The speaker should not be in proximity of the rcvr.

4. If the 71A tube is used, the output device is not necessary.

5. Output devices may be of the impedence-coupled type, such as S-M, General Radio, National, Mayoline, etc. All are satisfactory.

6. If a power amplifier is incorporated, the last AF stage of the rcvr. is cut out.

7. Existing 1st stage AF xfrmr. may be replaced with later models.

8. Existing rheostat will not handle current draw of the 71A; 71A filament must be controlled by a separate rheostat, or by a 0.5A filament ballast resistor (Amperite) or ballast tube.

9. Procedure:

a) The grid return from the SEC of the 1st AF xfrmr. is cut at point (1) and a flexible lead soldered to the xfrmr. terminal. This lead will supply C voltage to the 1st stage, indicated by C1.

b) The grid return from the 2nd AF xfrmr. is cut at point (2), and a flexible lead soldered to xfrmr. terminal. This supplies C voltage to the power tube, C2.

c) Remove completely lead (3) at the socket.

d) Mount the filament ballast (Amperite) and connect as indicated by the dotted line, to wire joining the two rheostats.

e) Replace rcvr. in cabinet and connect battery and speaker.

10. When changing power tube, consider the following data:

TUBE	PL. VOLTAGE		
	135	150	180
12A	9	9	--
71A	27	23	40

11. If new DET is used, grid-leak should be connected to NEG filament leg

ELECTRIFYING THE FRESHMAN "MASTERPIECE"
(Sht. 3)

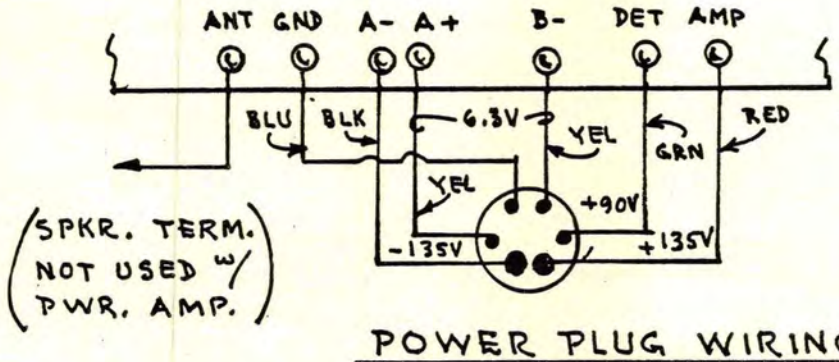

POWER PLUG WIRING

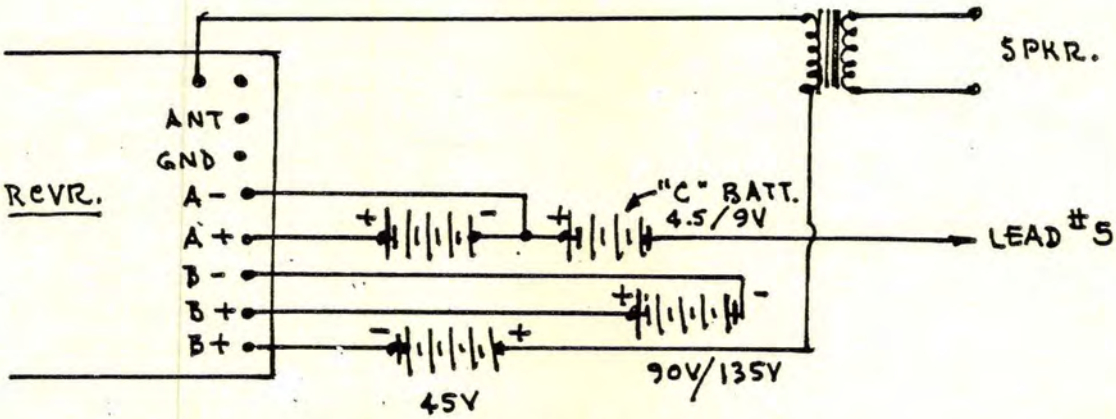

REWIRING WHEN POWER TUBE IS NOT CHANGED

(INSTALLING 12A OR 71A. PWR. TUBE REQUIRES 0.5A BALLAST RESISTOR IN (A-) LEG. SEE NEXT PAGE FOR PWR. TUBE HOOK-UP.)

ELECTRIFYING THE FRESHMAN "MASTERPIECE"
(Sht. 4)

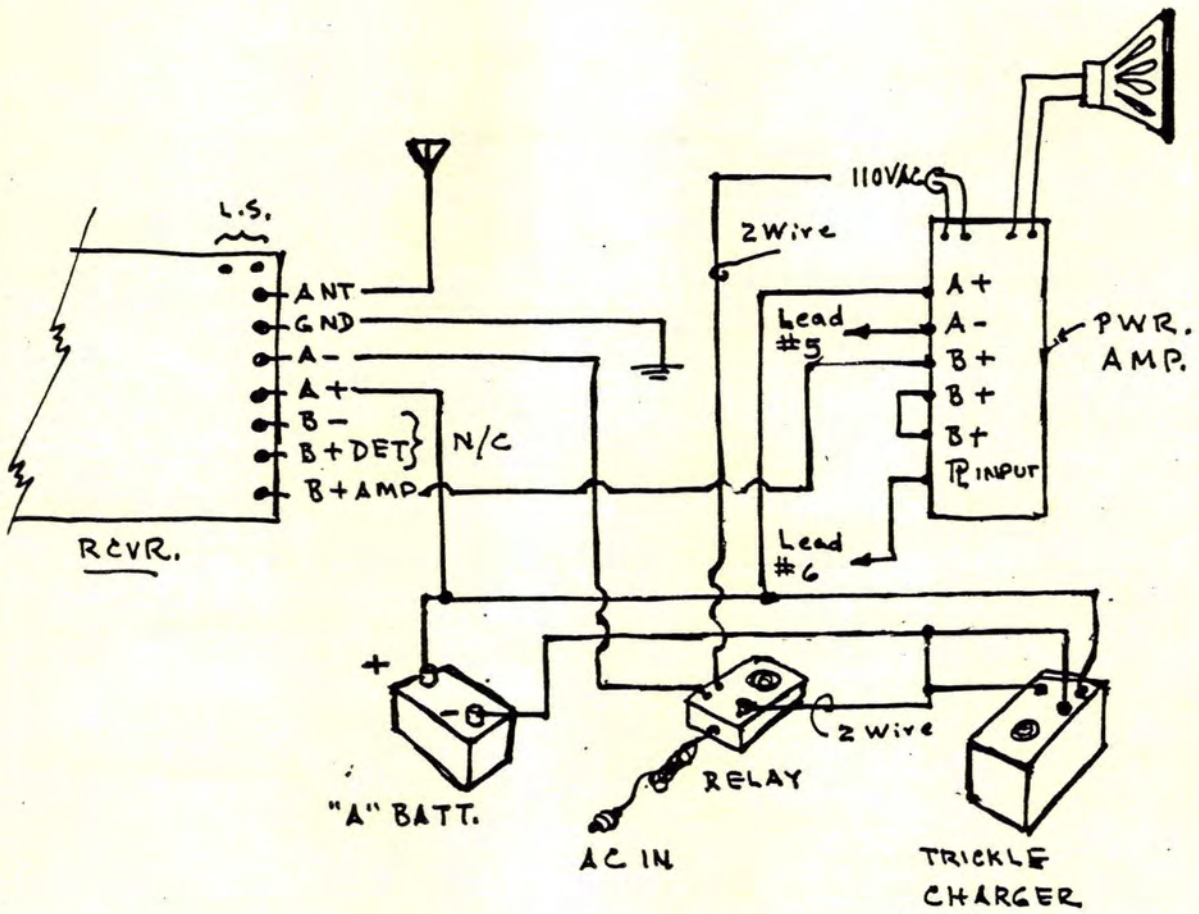

NEW POWER CONNEXIONS

(Leads Nos. 5 & 6 under chassis.)

GENERAL RADIO's TRF RCVR., 1926
(Sht. 1)

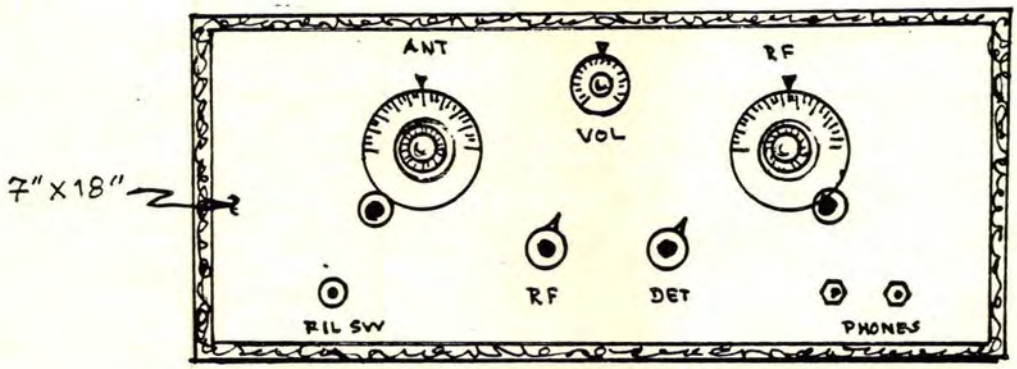

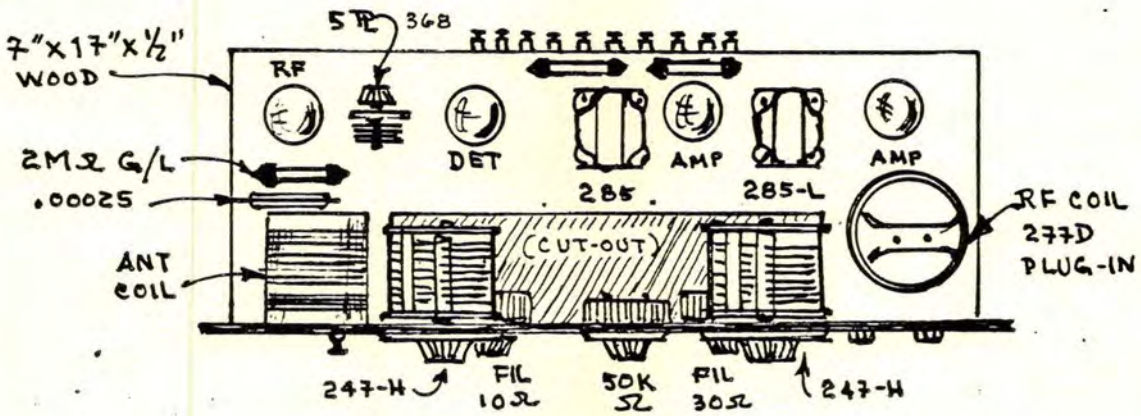

(NOS. ARE G.R. NOS.)

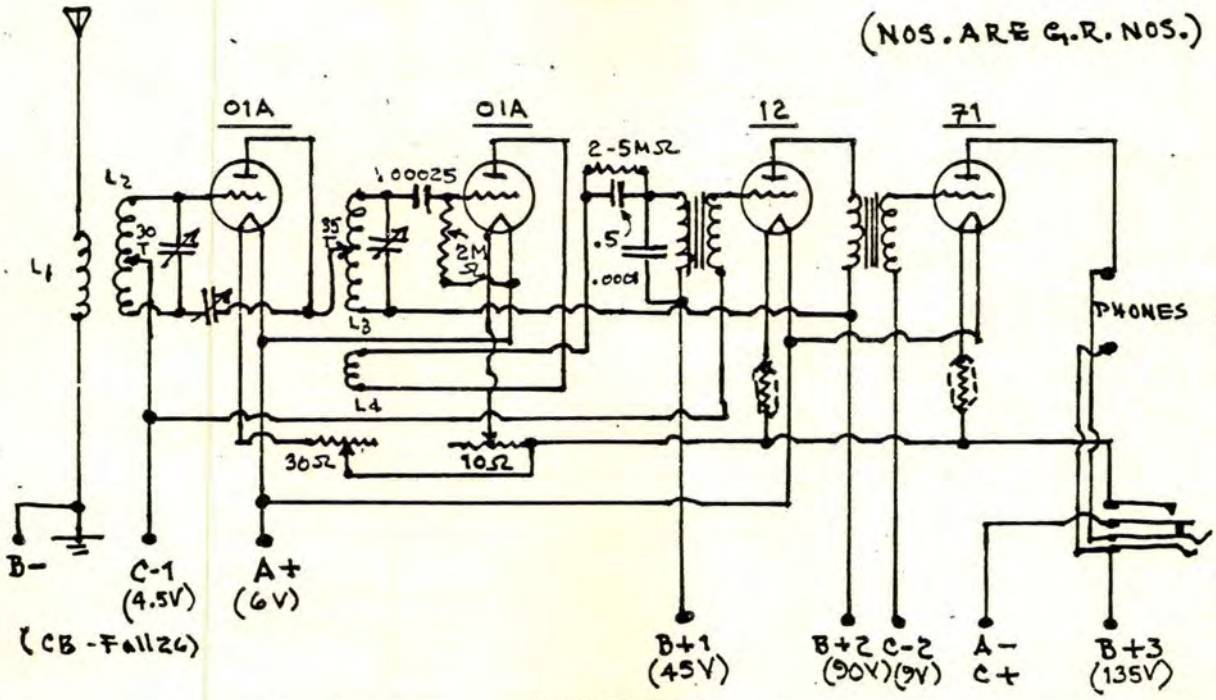

GENERAL RADIO's TRF RCVR., 1926
(Sht. 2)

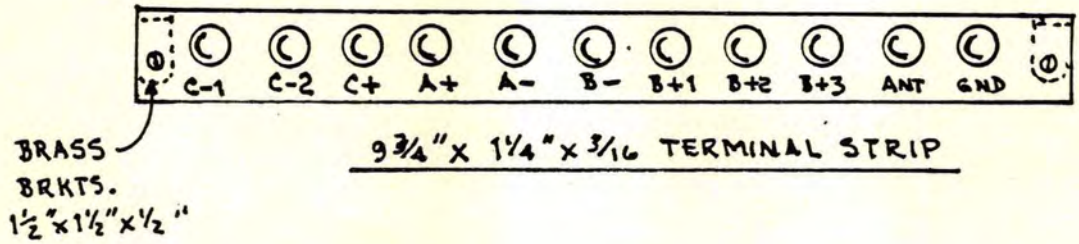

COIL DATA

Form = 2.75" Ø x 2.25" (2 Req.)

L1 = 15T #24 DSC; slipt over L2.
L2 = 59T, #24 DSC; tapt at 30T.
L3 = 59T, #24 DSC; tapt at 35T.
L4 = 15T, #24 DSC; slipt over end of L3.

NOTES

1. All wiring is below baseboard.

2. Seperate binding post for "C" and "B" voltages is mandatory.

3. If you do not use GEN-RAD coils, the above coil data should be used.

4. Tune in a station around 300 meters; vary the variable across L3 until a whistle occurs.

5. Tune the ANT coil variable for best signal strength.

6. Adjust the 5-plate variable until rocking the ANT variable causes no change in the pitch of the whistle.

7. Tune in another station, and vary the 50-K resistor until whistle disappears.

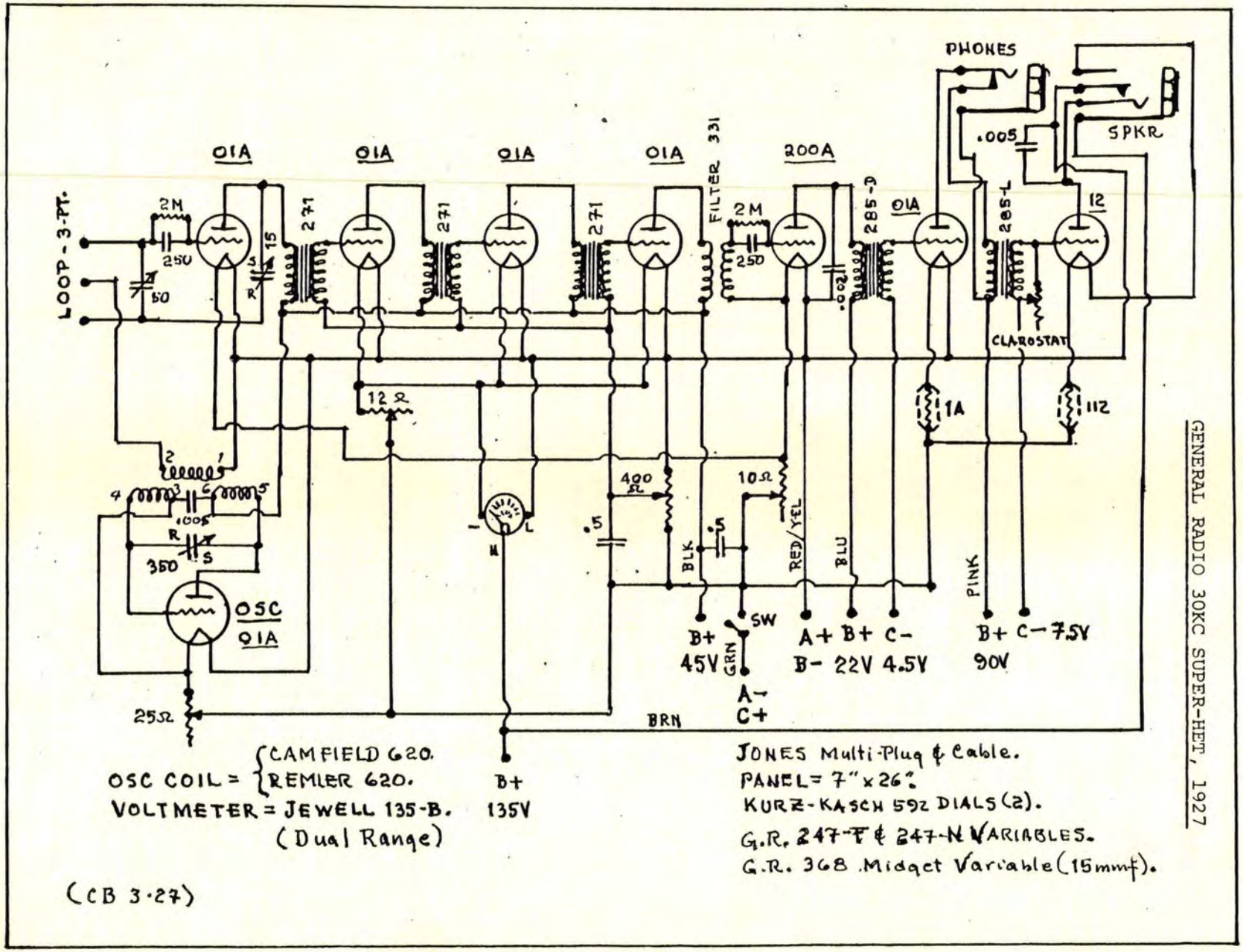

GENERAL RADIO 30KC SUPER-HET, 1927

GREBE "SYNCHROPHASE" MODEL MU-1,1925

200 to 550 Meters

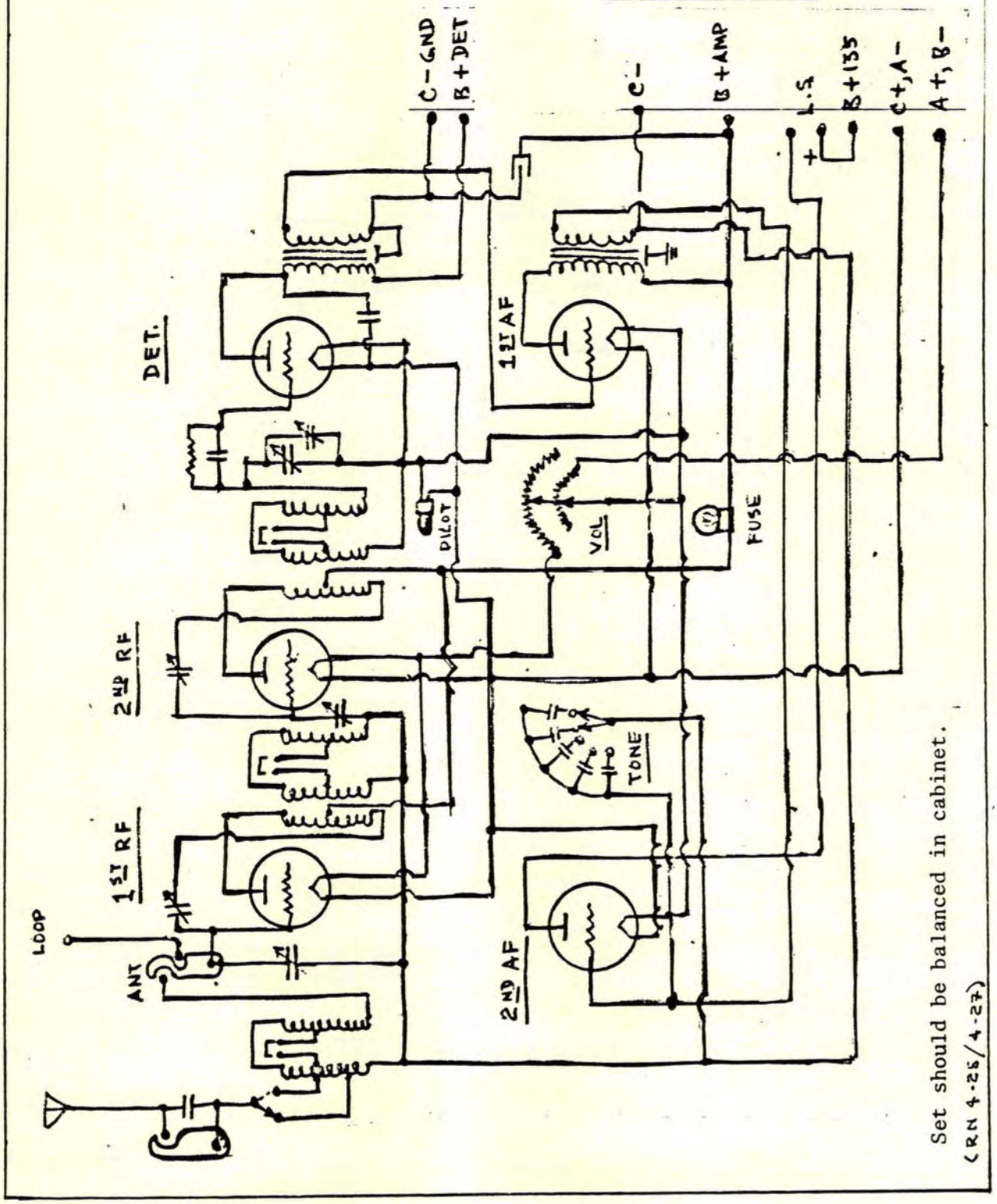

Set should be balanced in cabinet.

(RN 4-26/4-27)

GRIMES' "INVERSE DUPLEX", 1923 VERSION

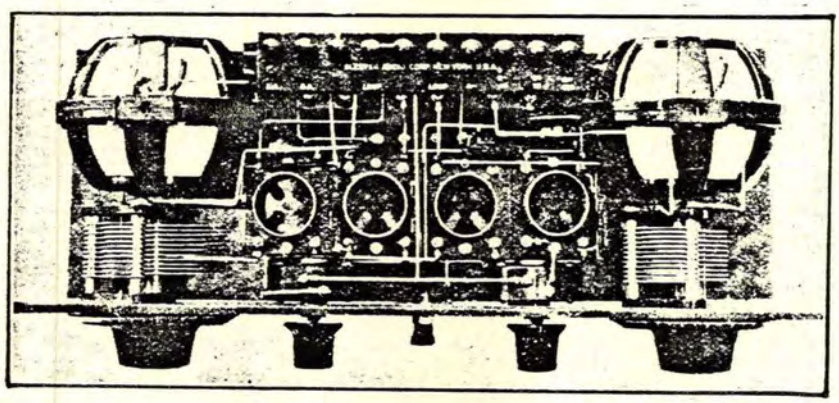

(1925 LAYOUT SHOWN)

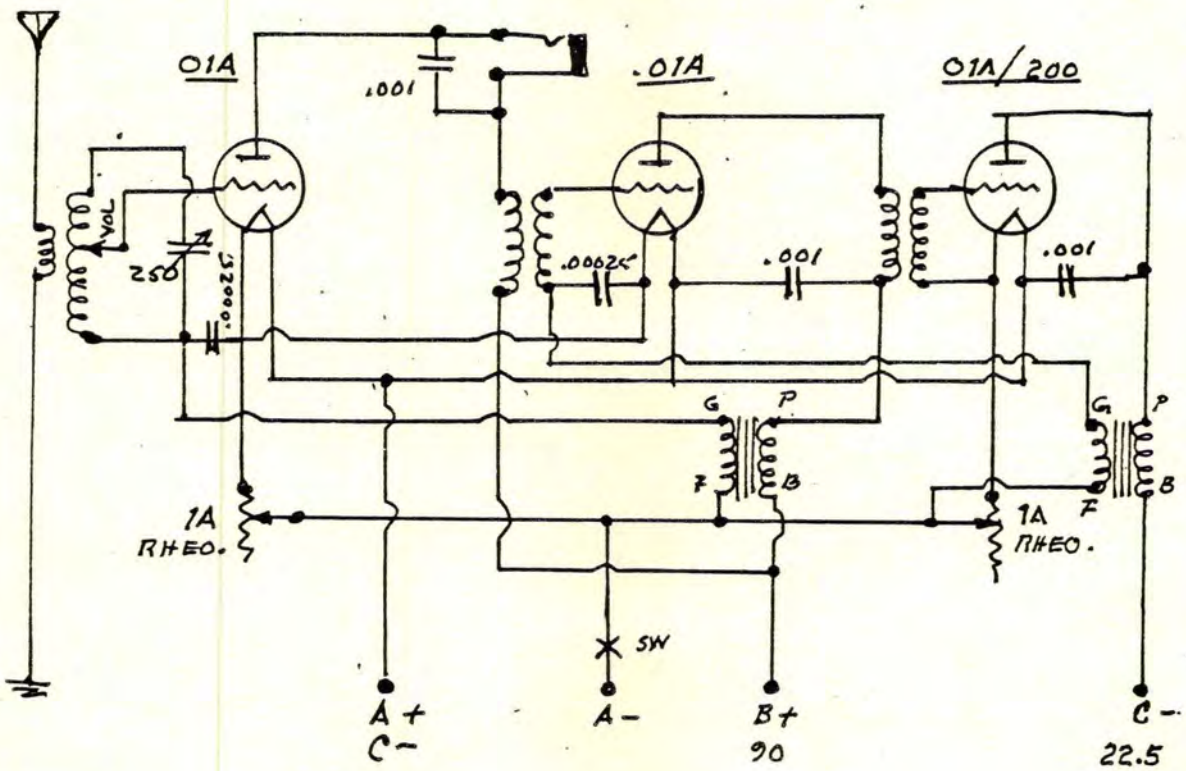

(R 1·24)

GRIMES ORIGINAL "INVERSE-DUPLEX", 1924

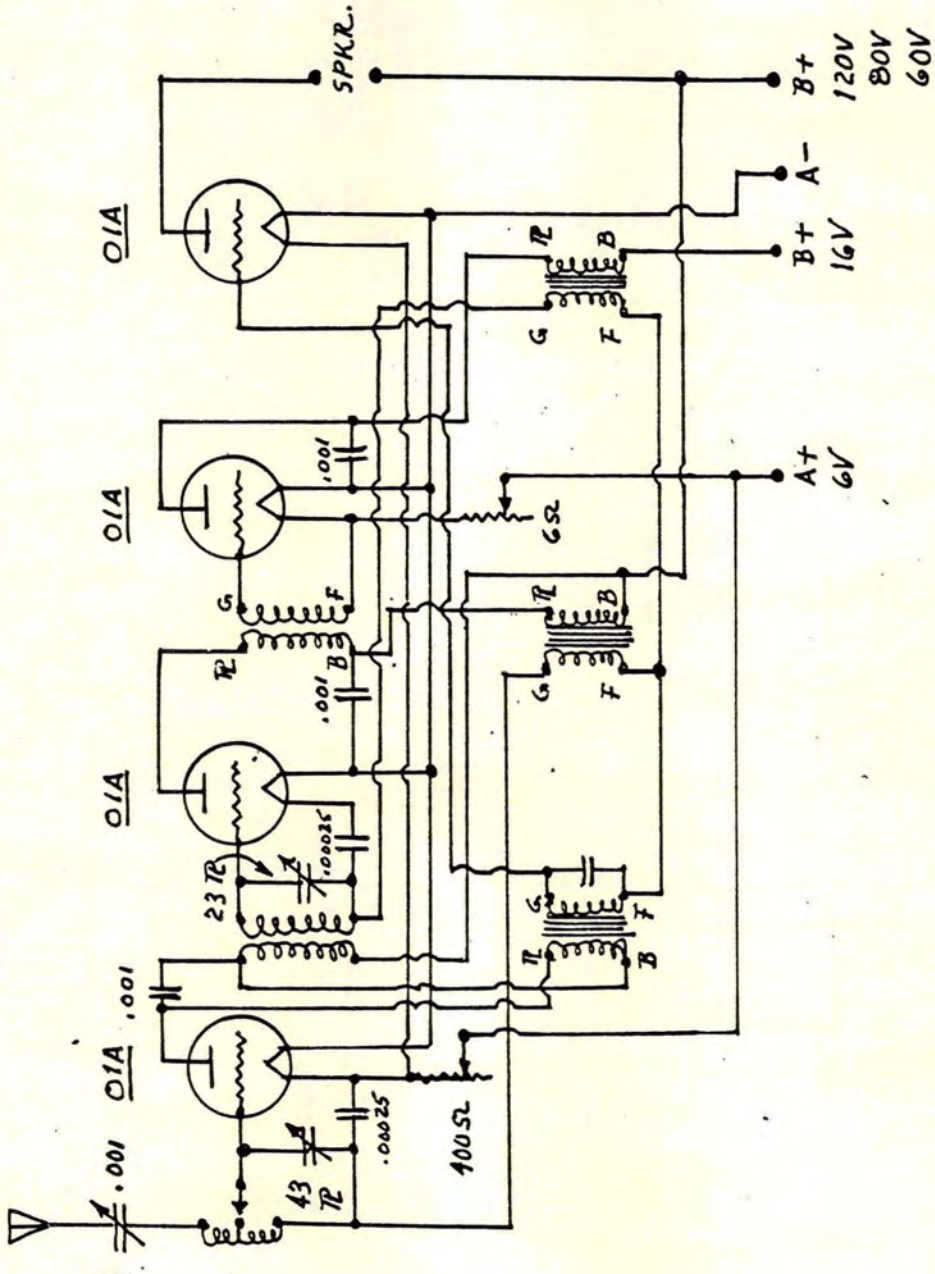

(R 3/4-24)

GRIMES "INVERSE DUPLEX" of 1925

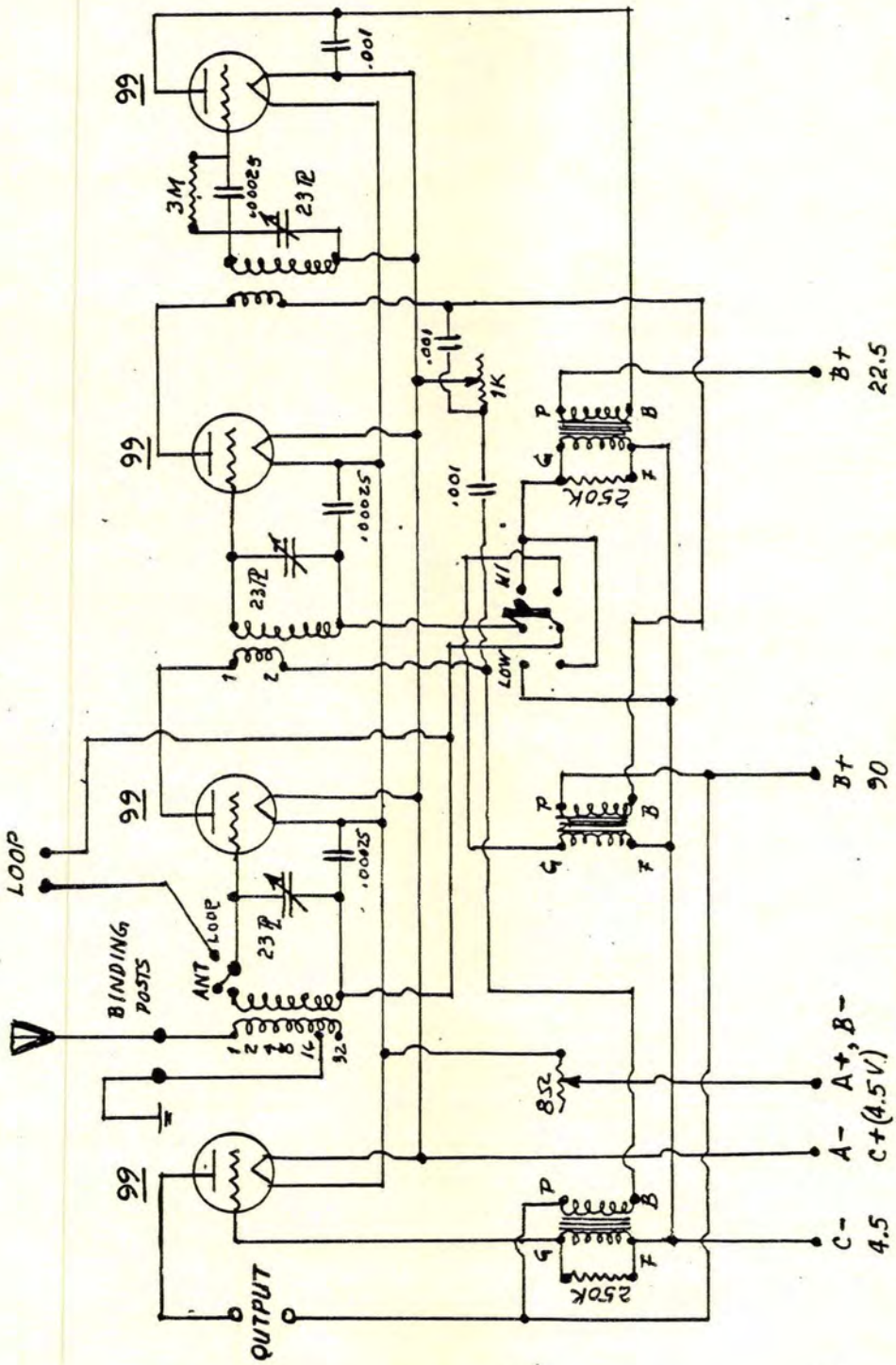

GRIMES "OCTO-MATIC" RCVR., 1927: Sht. 1

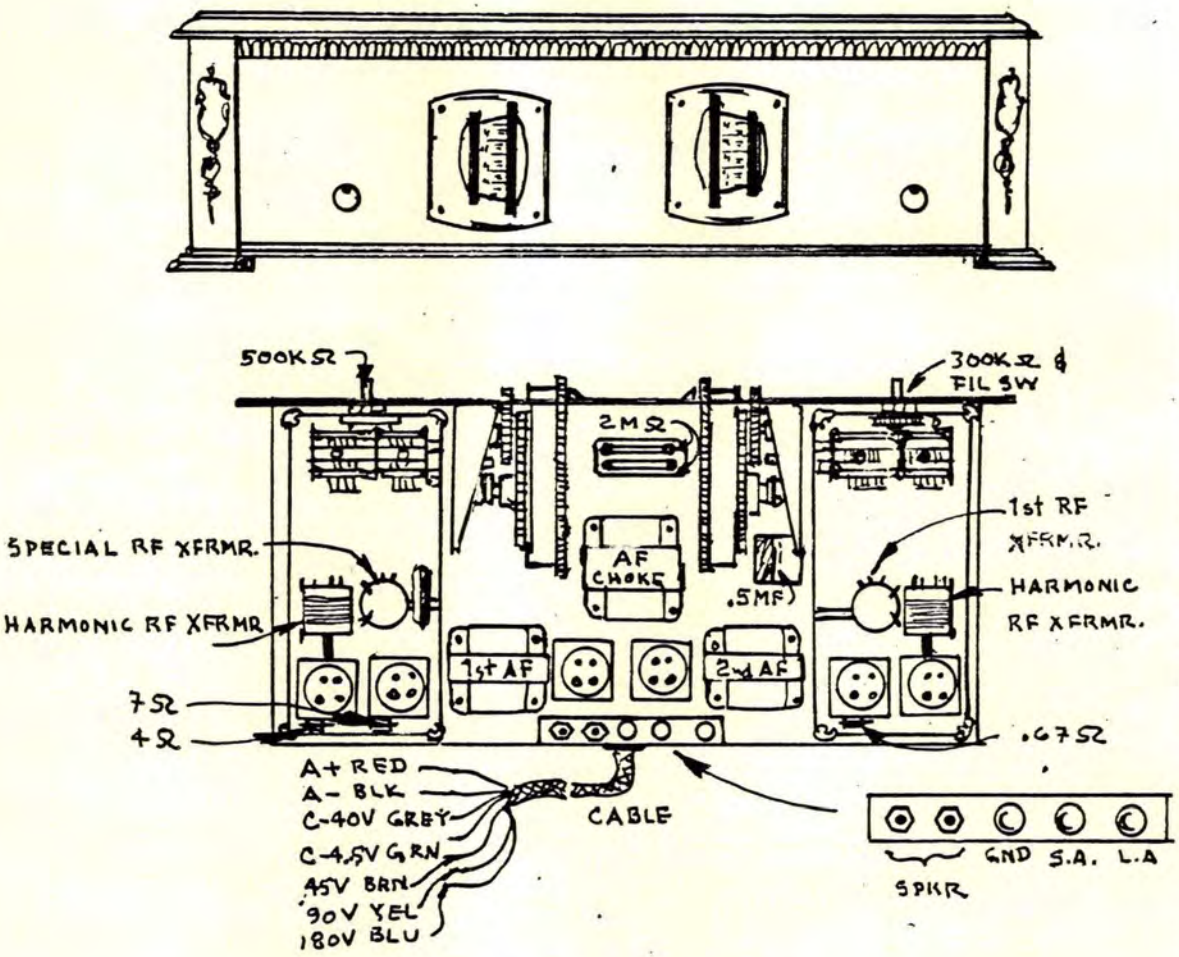

PRINCIPLE PARTS LIST

1. RGS Harmonic Wave Trap
2. " ANT Tuner Coil
3. " BC " "
4. " Harmonic Tuner Coil
5. RGS 9"x20"x 3/8" Baseboard
6. TYRMAN Single Vernier Drum Dials (2)
7. ALCO Al.Al. Shield Boxes (2)
8. DeJUR 350 mmf 2-gang Variable (2)
9. THORDARSON AF Xfrmrs. R-200 (2)
10. " Output Choke R-196
11. Resistance-Coupling AF unit (DeJUR/DAVEN)
12. LIGNOLE Panel, 7"x 21"x 3/16", Engraved

(CB 11-27)

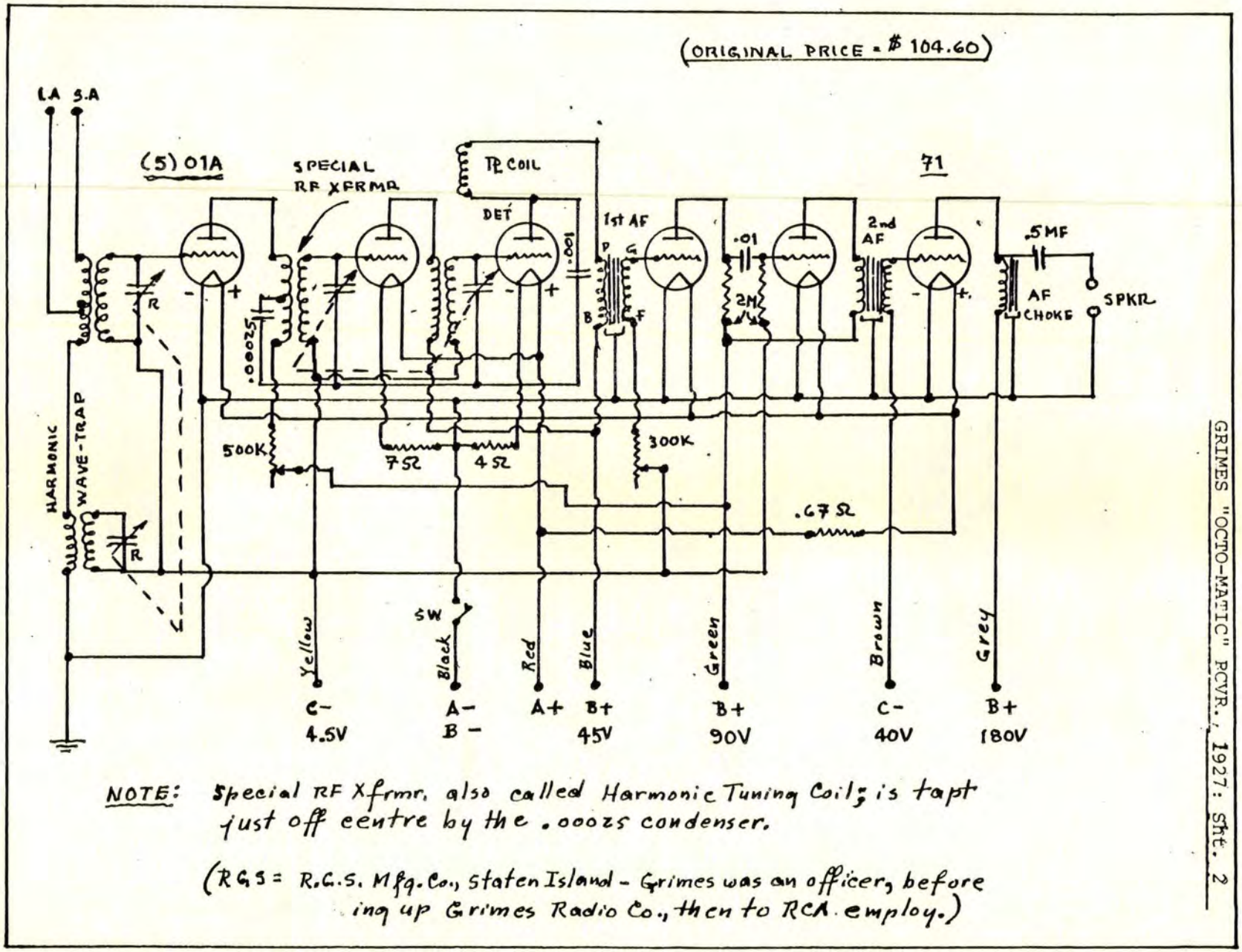

GRIMES "OCTO-MATIC" RCVR., 1927: Sht. 2

NOTE: Special RF Xfrmr. also called Harmonic Tuning Coil; is tapt just off centre by the .00025 condenser.

(RGS = R.G.S. Mfg. Co., Staten Island - Grimes was an officer, before ing up Grimes Radio Co., then to RCA employ.)

GRIMES DC "NEW YORKER", 1929: Sht.1

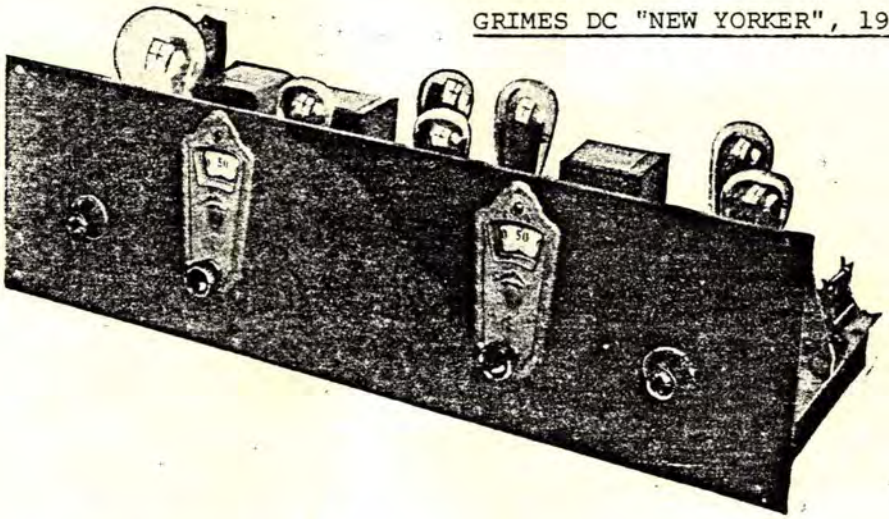

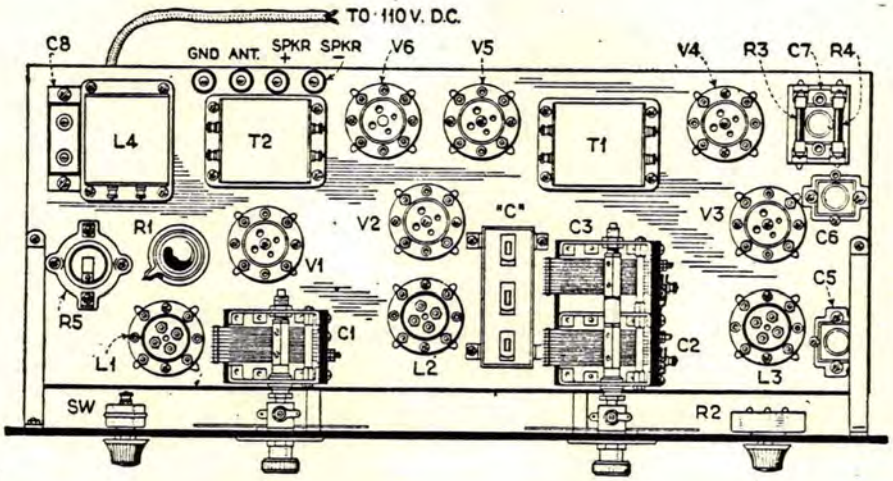

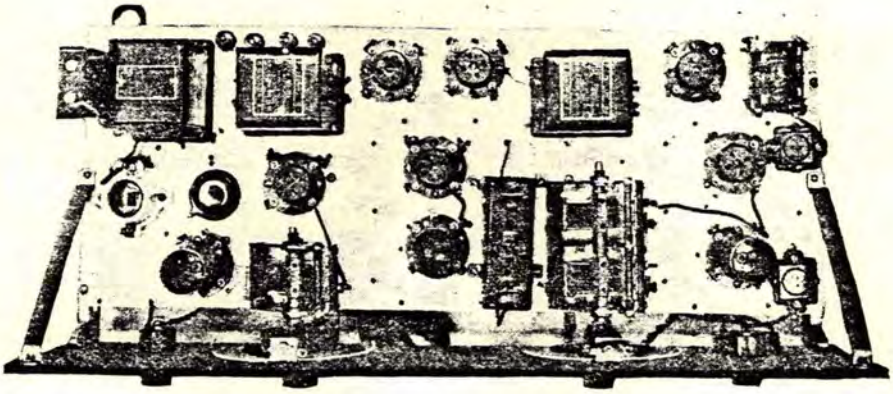

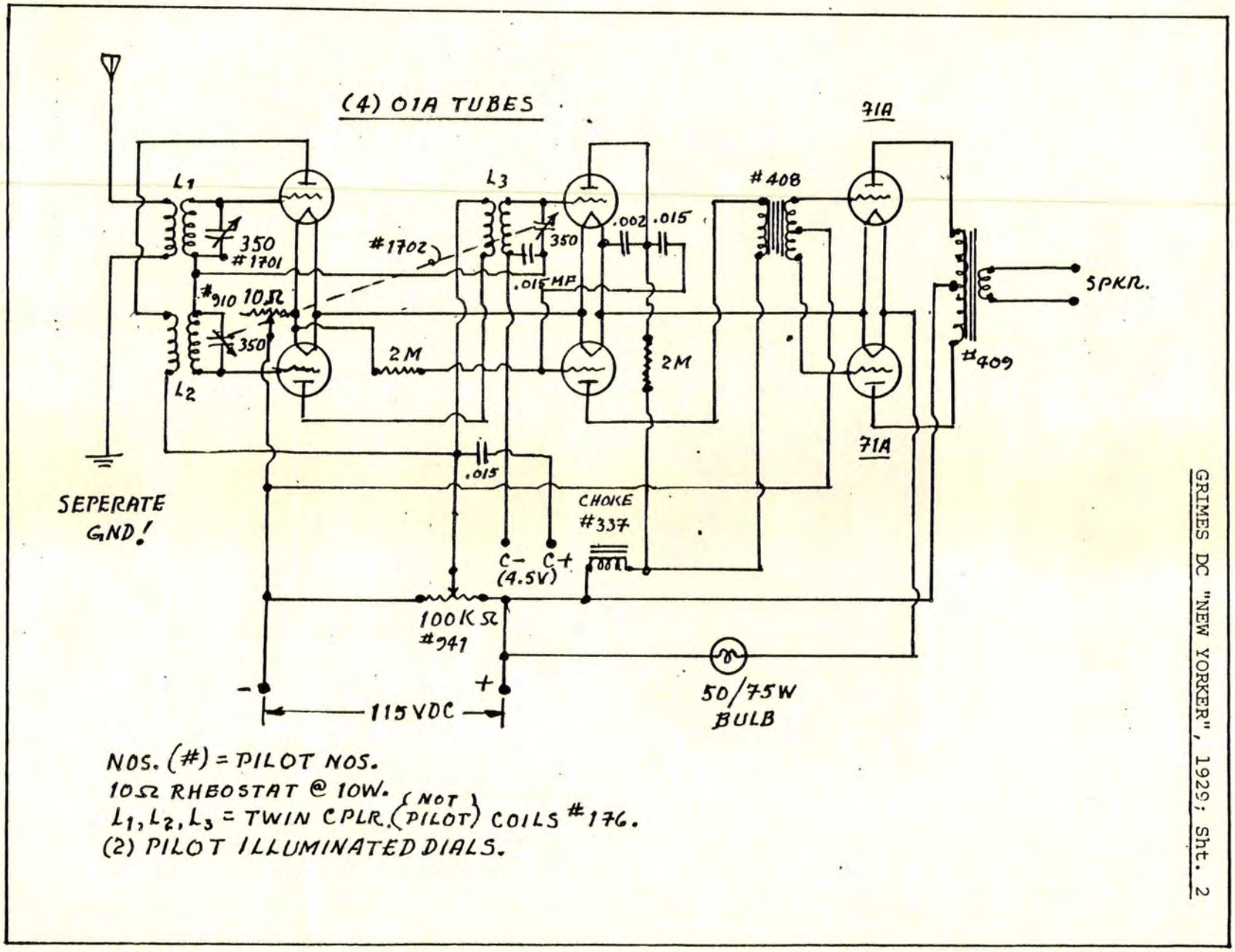

NOS. (#) = PILOT NOS.
10Ω RHEOSTAT @ 10W.
L_1, L_2, L_3 = TWIN CPLR. (NOT PILOT) COILS #176.
(2) PILOT ILLUMINATED DIALS.

GRIMES DC "NEW YORKER", 1929; Sht. 2

(Sht.1)

David Grimes

1 EQUALS 2

"Baby Grand"

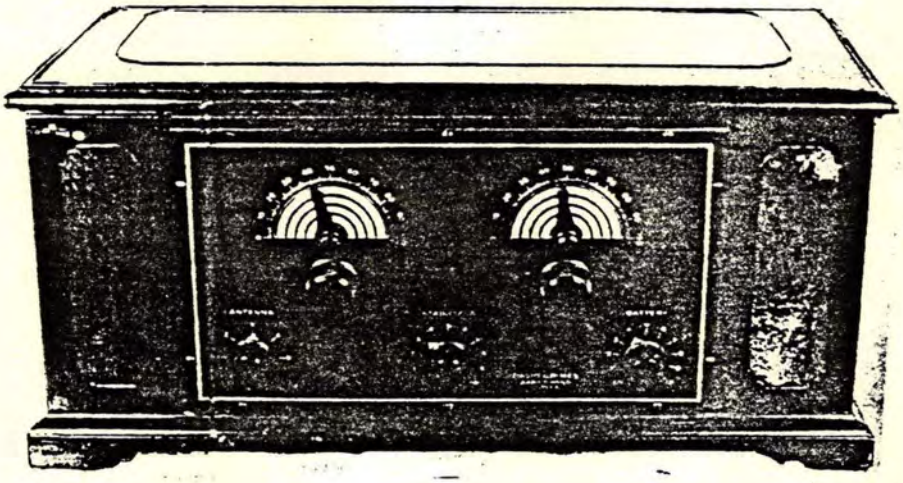

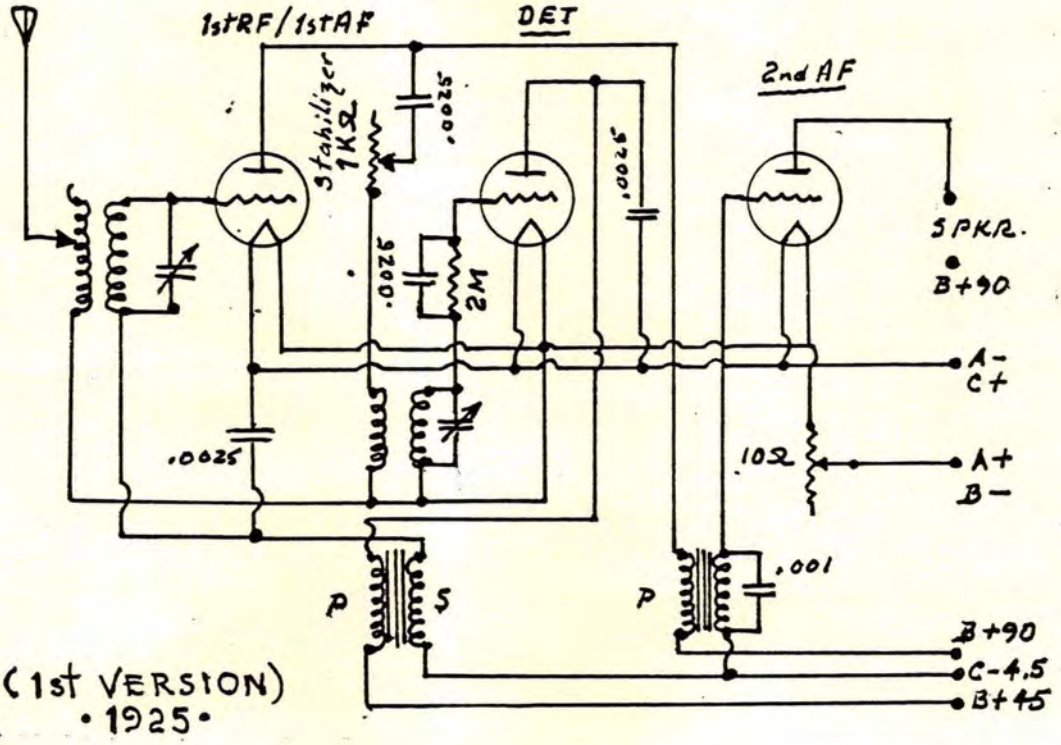

(1st VERSION)
•1925•

GRIMES' "BABY GRAND" RCVR.: Sht. 2

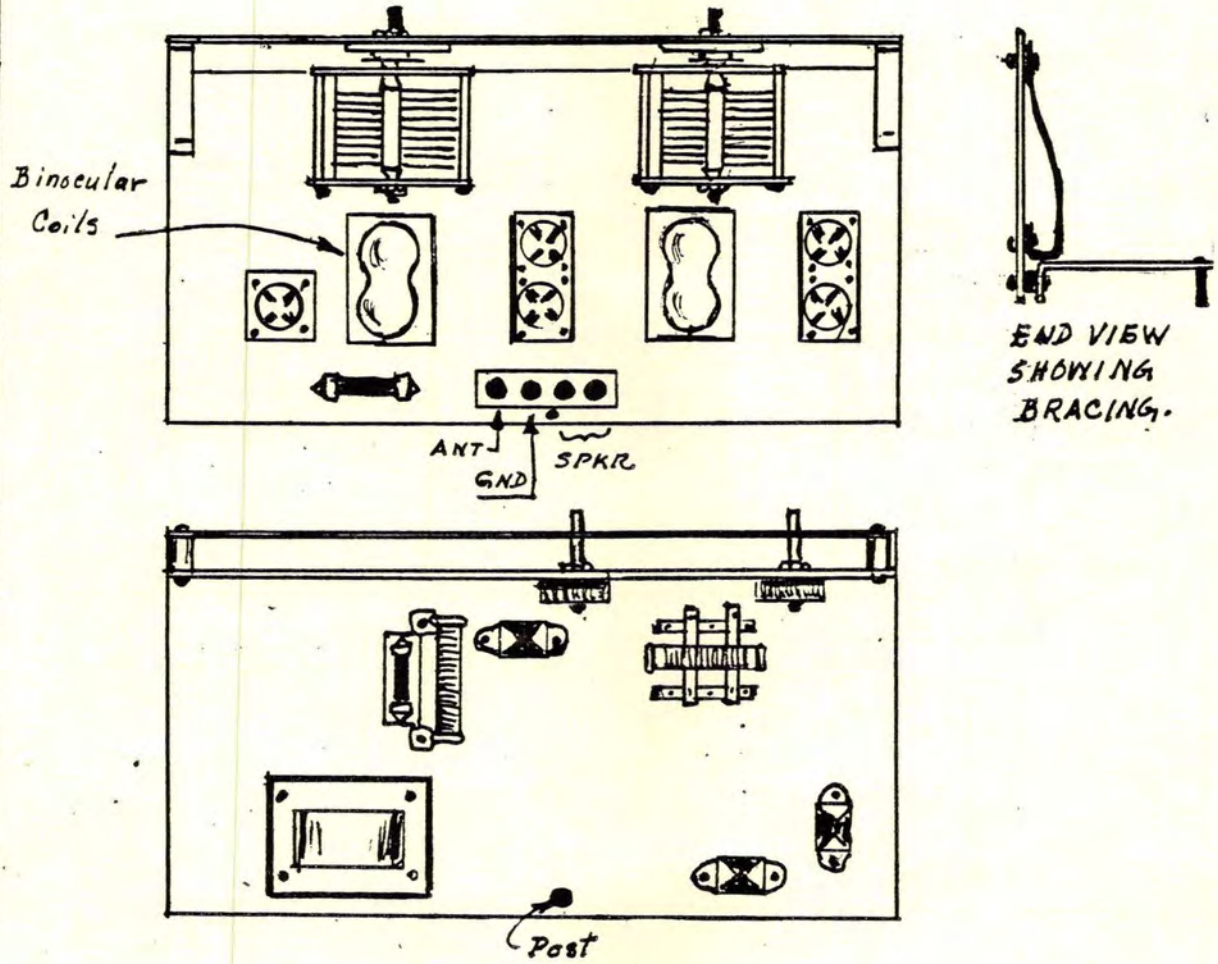

BOTTOM VIEW

(XFRMR.-CPLD. AF VERSION SHOWN.)

(Sht: 3)

"BABY GRAND" w/ R-C AF SEXION

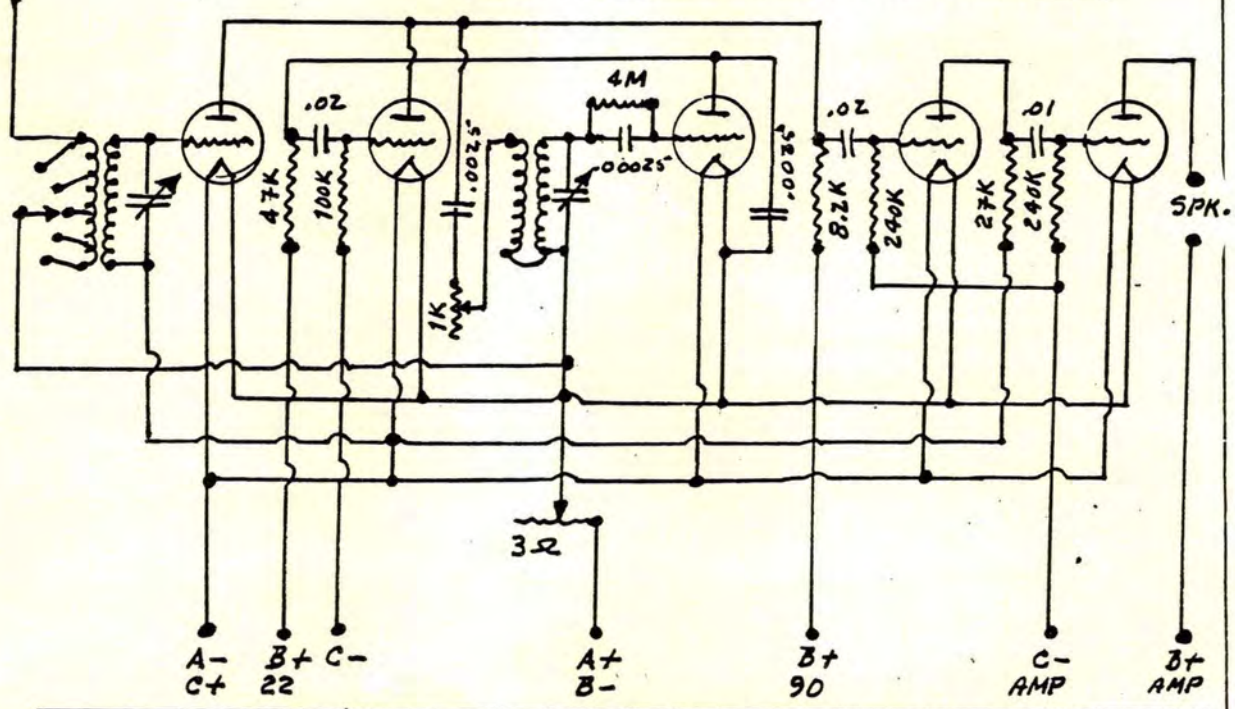

w/ XFRMR. AUDIO SEXION

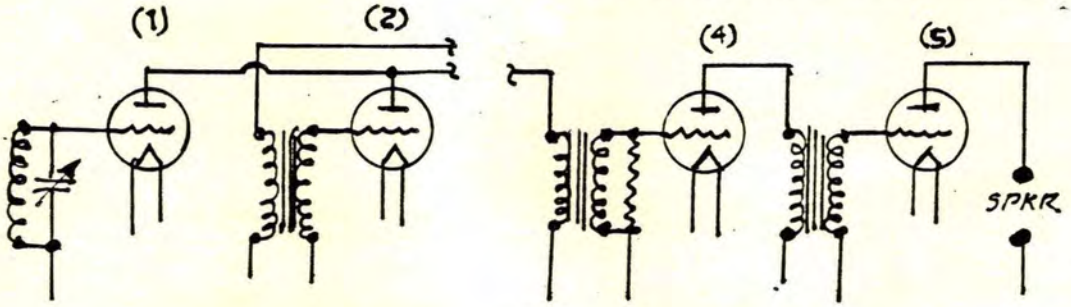

(Circuitry not shown same as above.)

"INVERSE-DUPLEX" VARIANT, 1926; Sht. 1

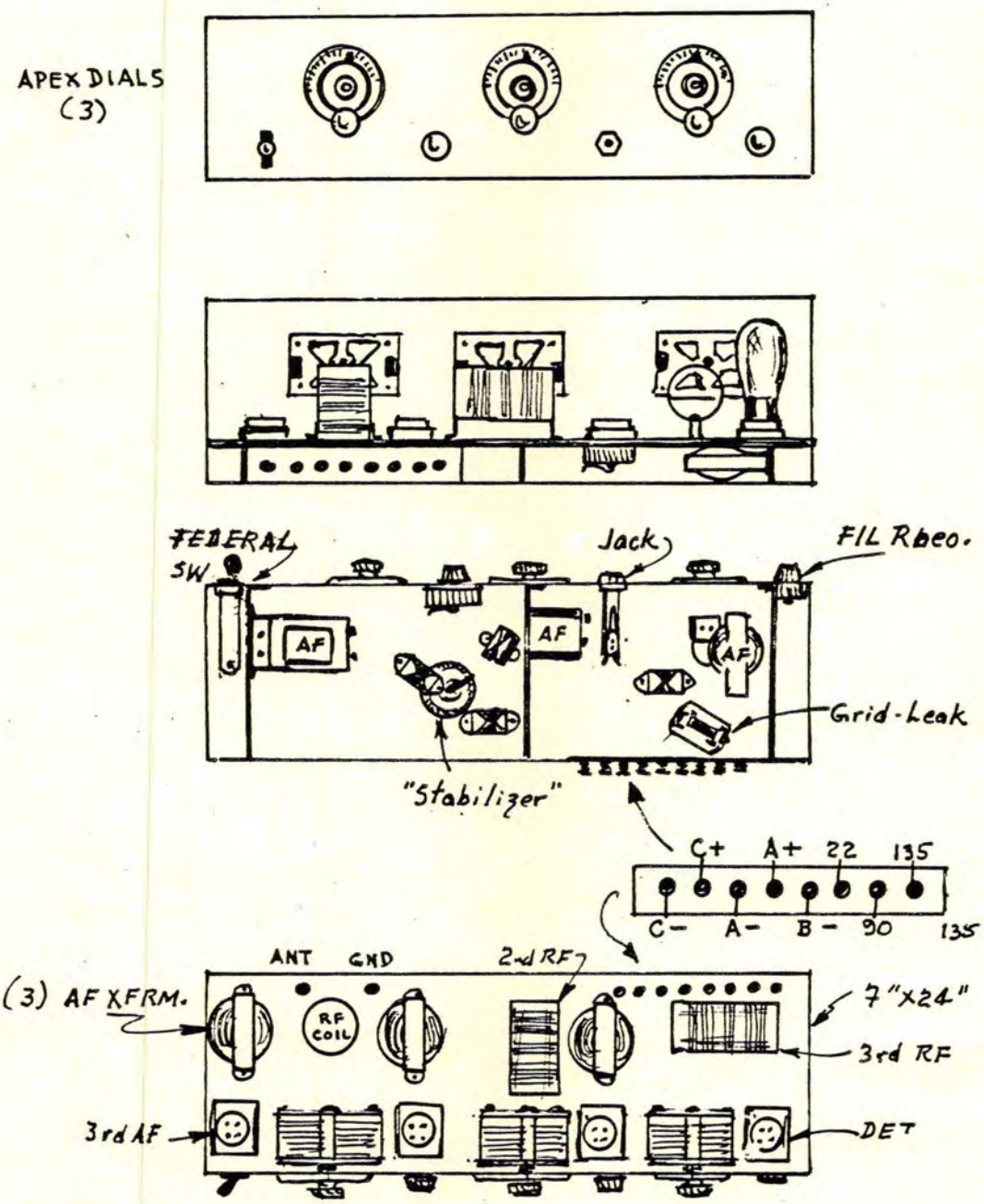

LAYOUT FOR A BASEBOARD

(RN 4·26) $40

"INVERSE-DUPLEX" VARIANT, 1926; Sht. 2

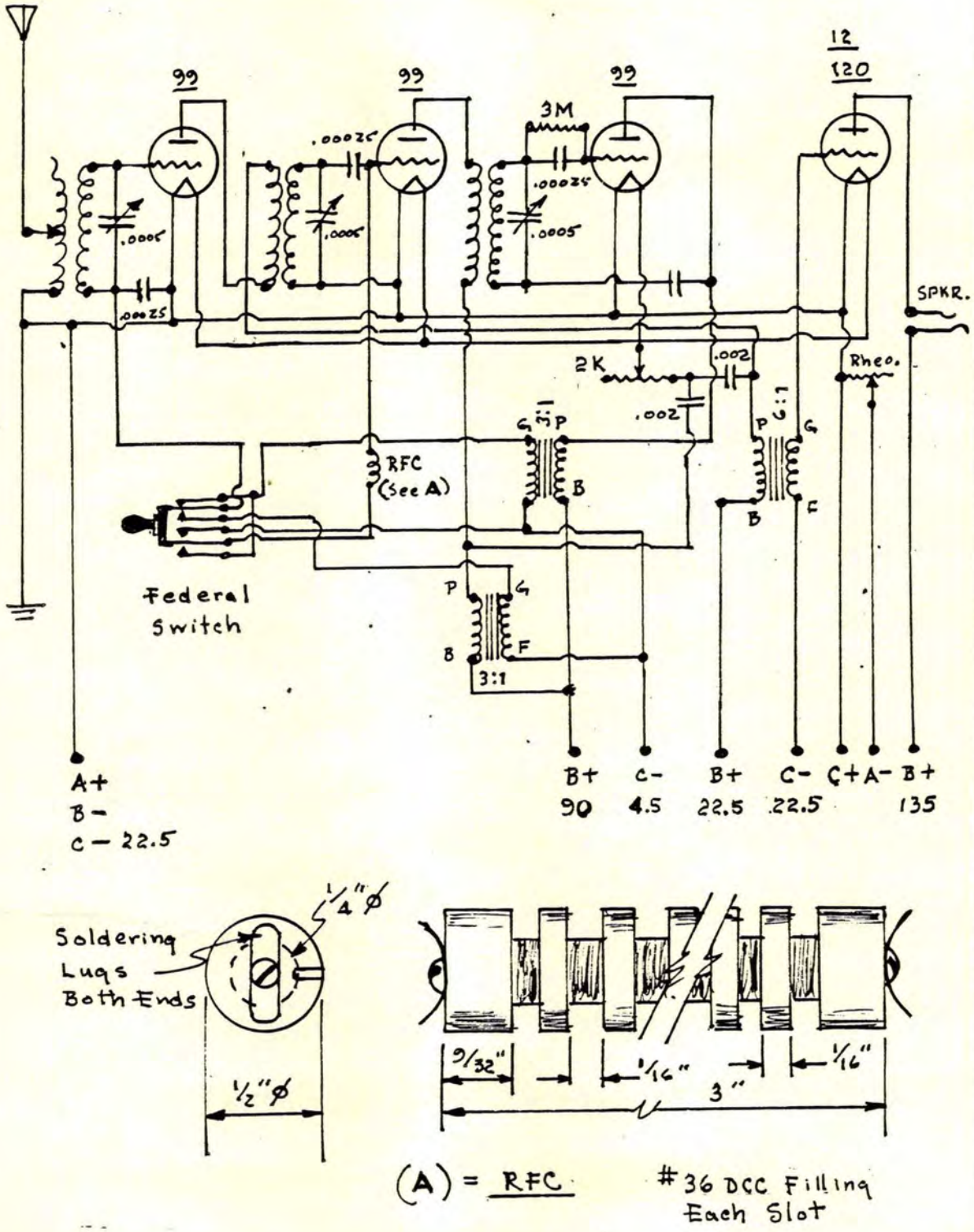

"INVERSE-DUPLEX" VARIANT, 1926; Sht. 3

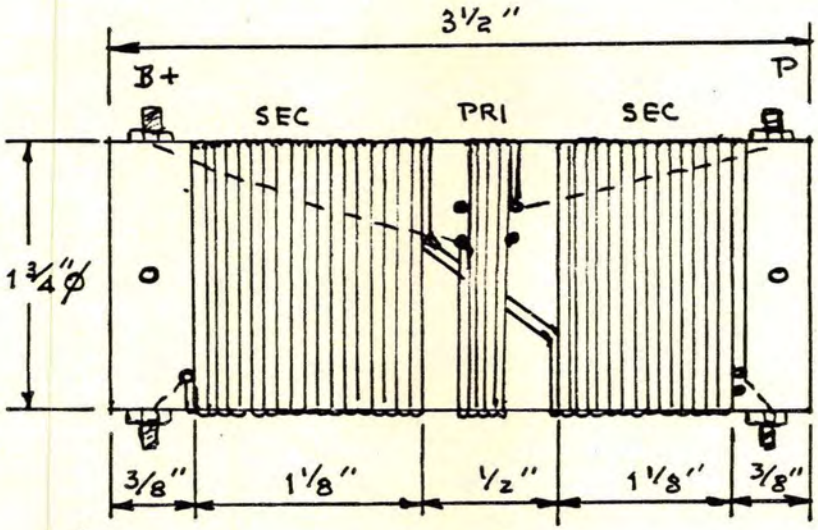

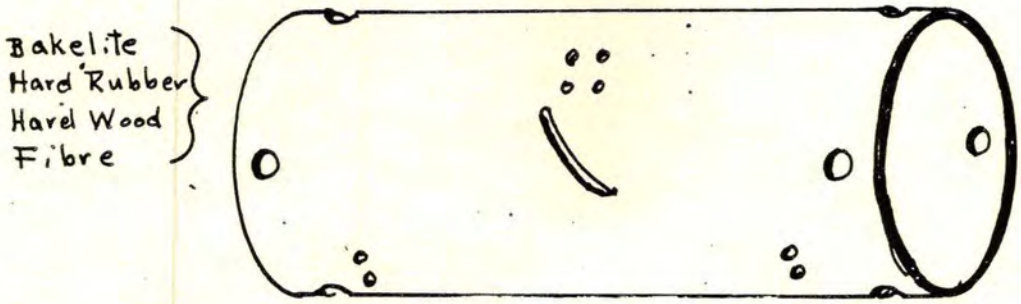

(2) RF TRANSFORMER DETAILS

PRI = 15T, #32 or #34 DCC
SEC = 90T, #28 DCC

ANT COIL = PRI 25T, #32 DCC, Tapt @
2T, 4T, 8T, 15T, 25T.
SEC = Same as RF coils.

GRIMES "R.G.S." INVERSE-DUPLEX; 1927: Sht.1

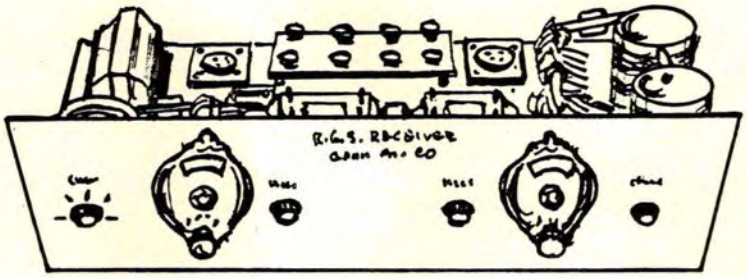

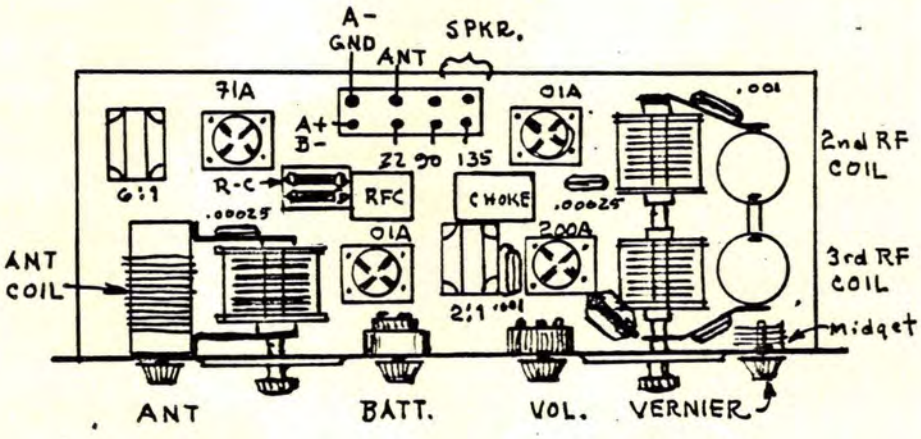

PLAN VIEW - 2nd VERSION
(See Sht. 3 for 1st Version)

Supplied in Kits, both versions, by GRIMES RADIO CO.

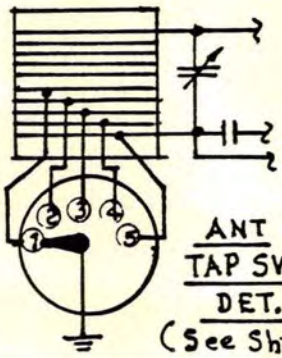

(See Sht. 3)

NAT'L. Single & Dual Variables
NAT'L. Dials
SAMSON AF X frmrs
DeJUR R-C Unit w/Cap.
GRIMES RFC & CHOKE.
GRIMES RF COILS.
Hardware & Components as required, any make.

(RB 1/2/3-27)

GRIMES "R.G.S." INVERSE-DUPLEX; 1927: Sht.2

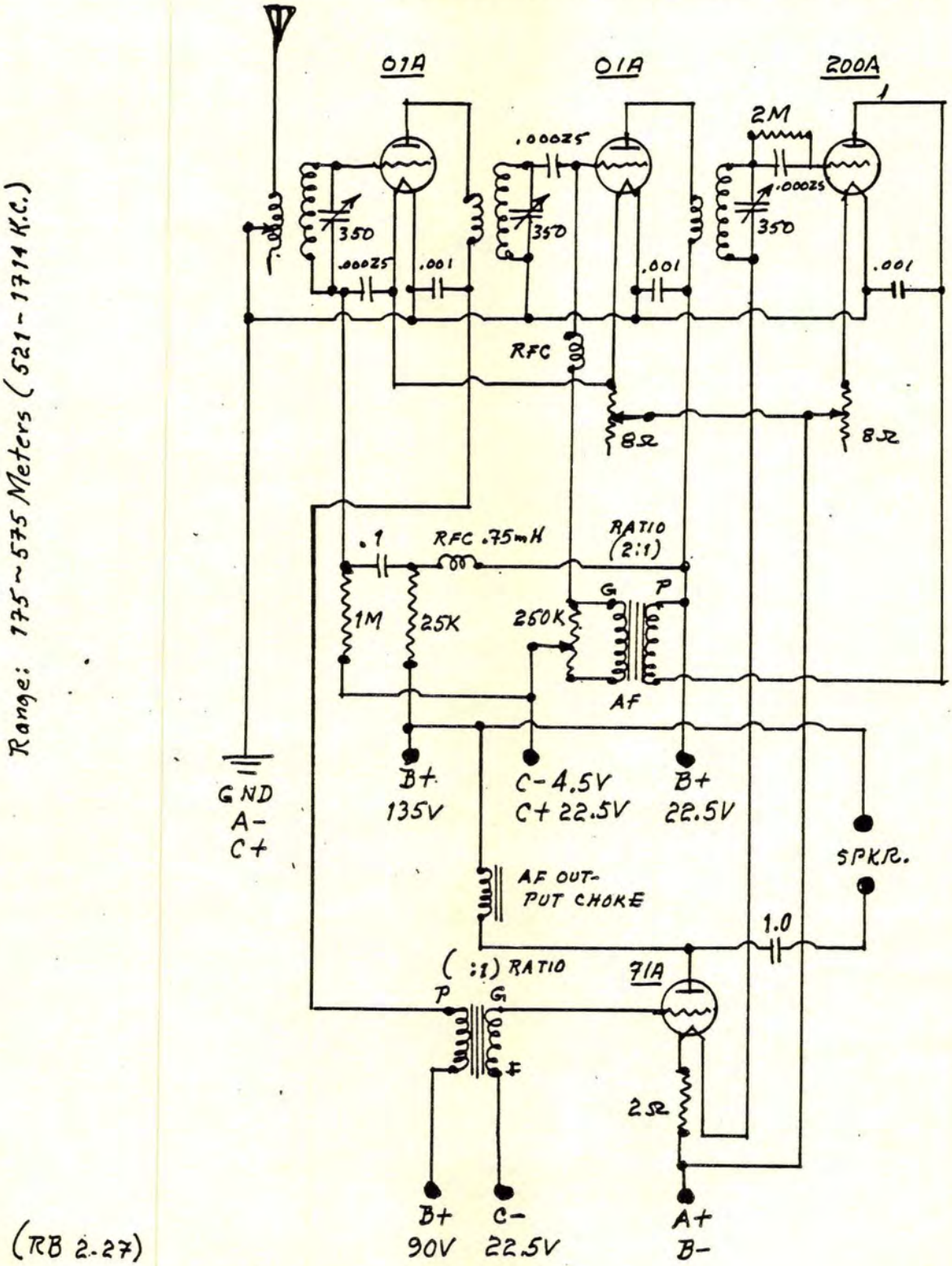

Range: 175~575 Meters (521-1714 K.C.)

(RB 2-27)

GRIMES "R.G.S." INVERSE-SUPLEX; 1927

(Sht.3)

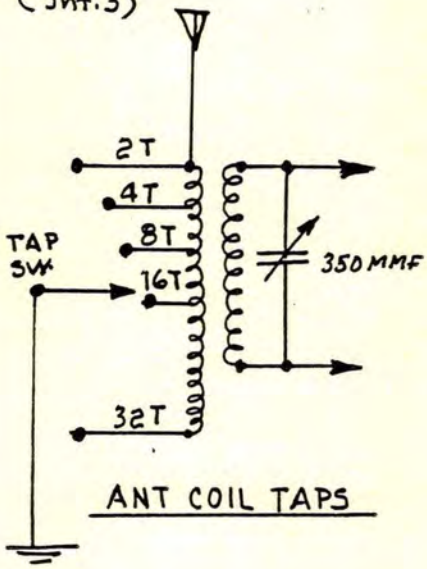

ANT COIL TAPS

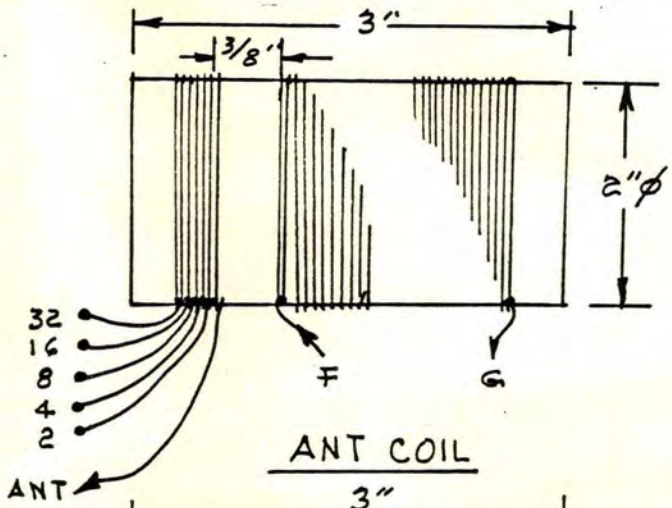

ANT COIL

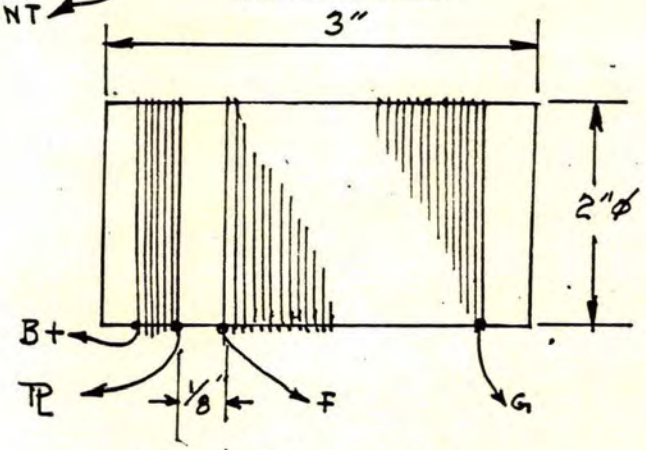

2nd & 3rd RF COILS

ANT COIL = PRI 32T, #30 DSC
SEC 92T, #28 DCC
RF COILS = PRI 9T, #28 DCC
SEC 92T, #28 DCC

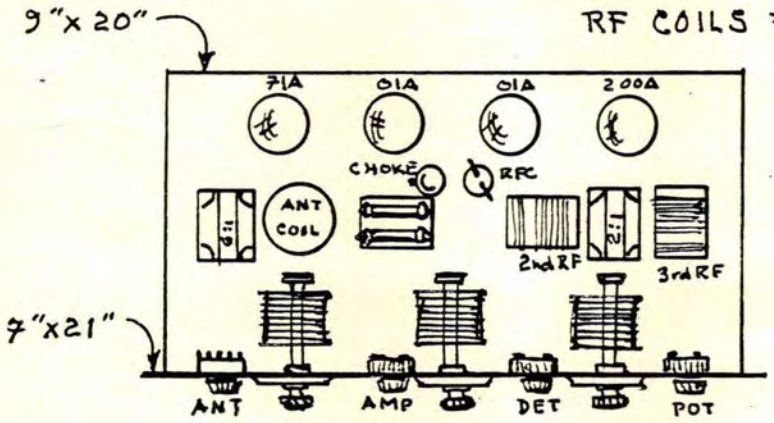

PLAN VIEW; FIRST VERSION

GRIMES "R.G.S." INVERSE-DUPLEX;1927:Sht.4

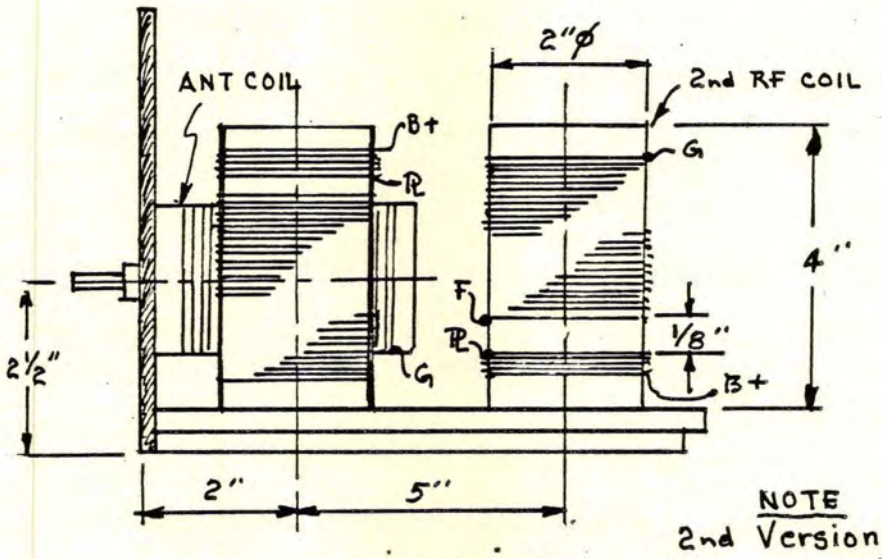

COIL PLACEMENT

NOTE
2nd Version of 2nd RF Coil Went to 90T on SEC. Other Coil Data Remains As Shown on Sht. 3.

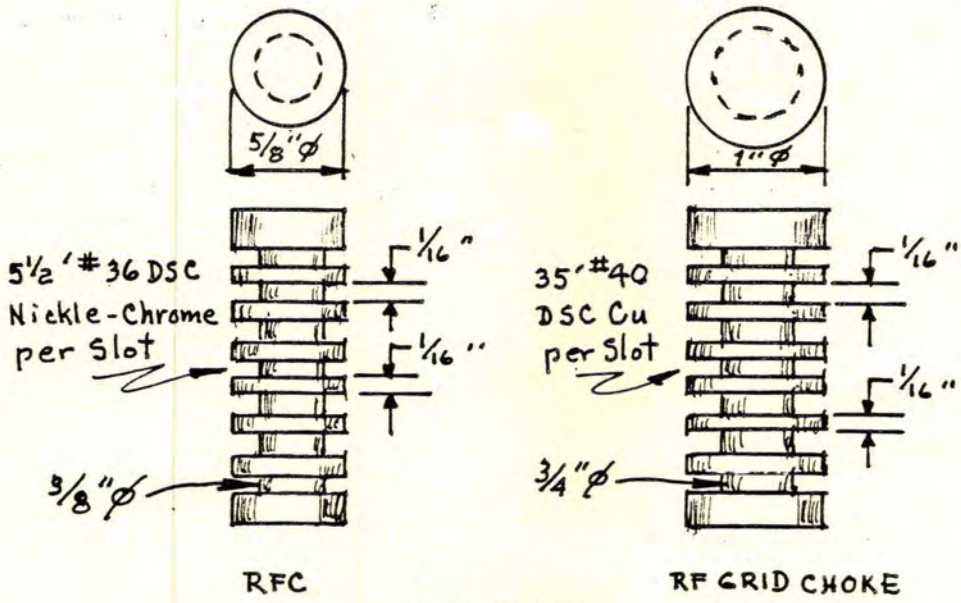

COIL DATA

(Sht. 5)

GRIMES "R.G.S." INVERSE-DUPLEX, 1927

OPERATING INSTRUCTIONS

1. No two circuits require the same tuning adjustments.

2. Selectivity, distance, tone quality depend exclusively on the position of the ANT switch. No other control is as important or as critical.

3. The ANT electrically shortens or lengthens the antenna.

4. The associated variable must be altered with each change in position of the ANT switch.

5. Stations between 750-1000 KC. are best received when the ANT switch is placed at Position 3. For stations between 1000-1500 KC., Position 1 or 2 is best. Tap Position 3 is a good spot for initial tuning. Position 4 is used for the 600 KC. range.

6. VOL control should be left at between ¼ and ½ on.

7. The 2-ohm rheostat regulates all FIL current. It also acts as a cut-off switch in the OFF position. FIL voltage should be held as close to 5V as possible.

8. Shortening the antenna will bring the proper setting of the ANT variable to approximately the setting of the dual variable for any special station.

9. Once a signal is tuned in, the dual variable is rocked for best fidelity.

* * *

GRIMES "INVERSE DUPLEX", 1927

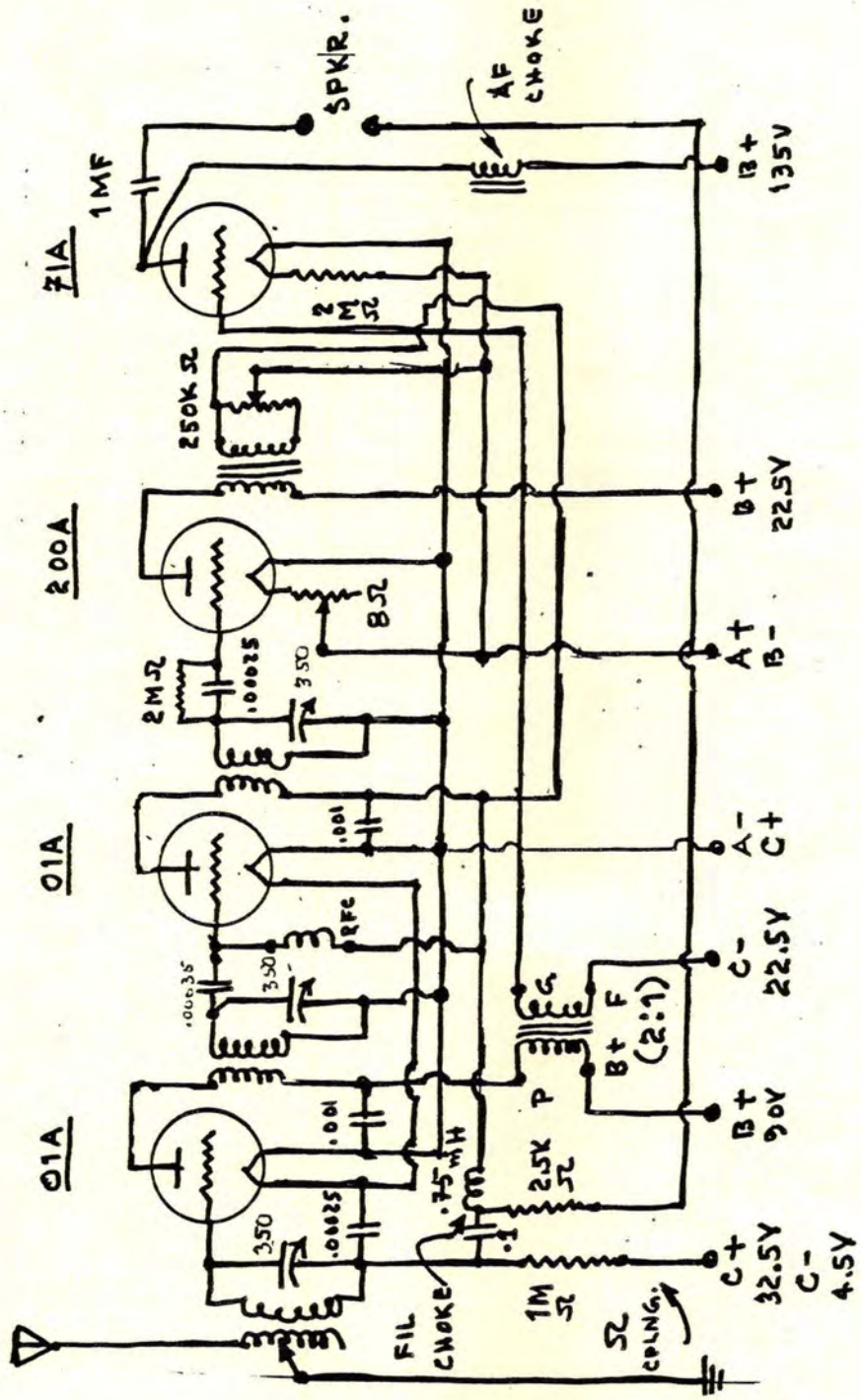

(RB 1-2-3-27)

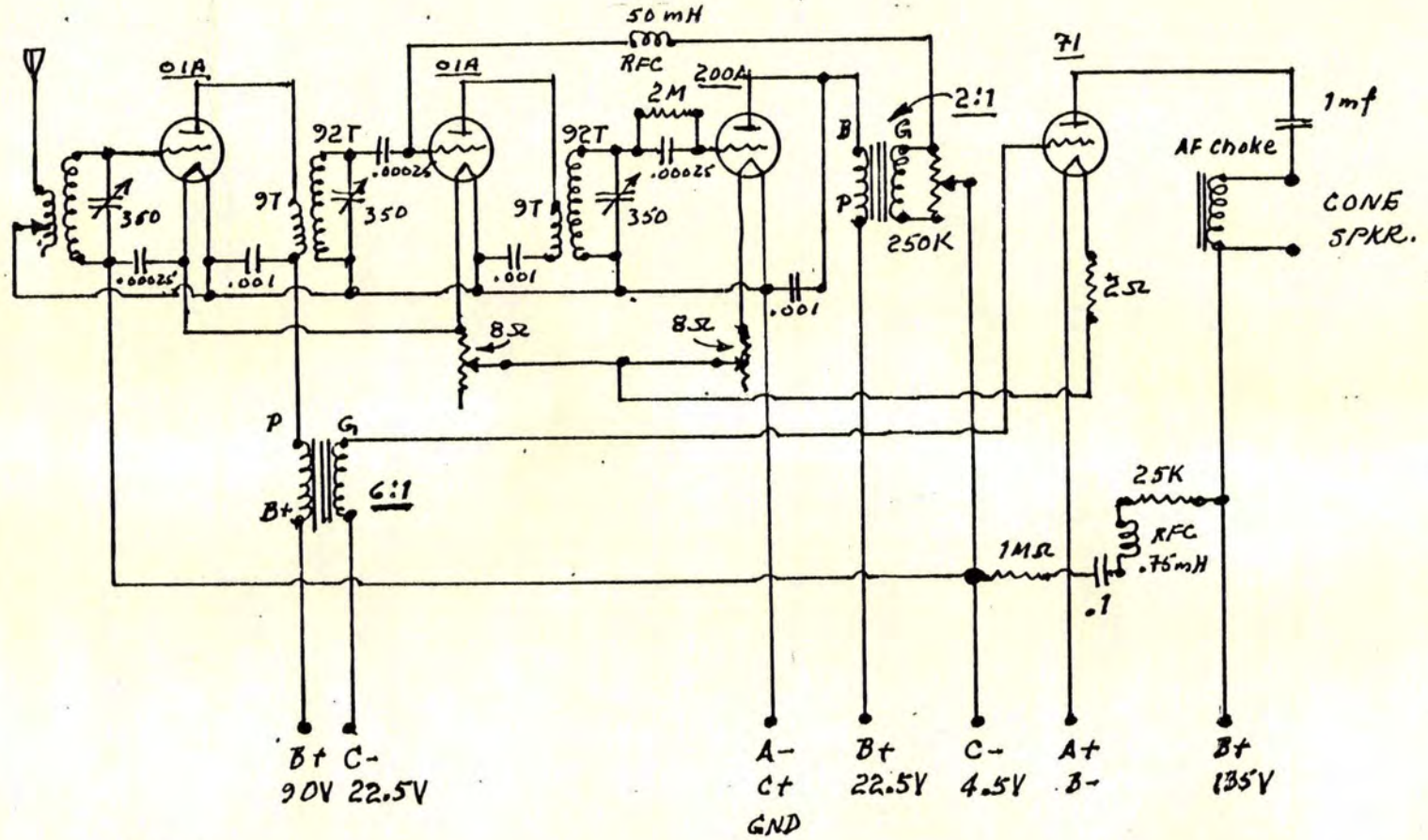

NOTE:
Audio polarity is critical;
see Sht. 2 for details.

IMPROVED GRIMES INVERSE DUPLEX
(1927)

(RB 2-27)

IMPROVED GRIMES INVERSE DUPLEX, 1927

GRIMES "INVERSE DUPLEX" VARIANT
(1927)

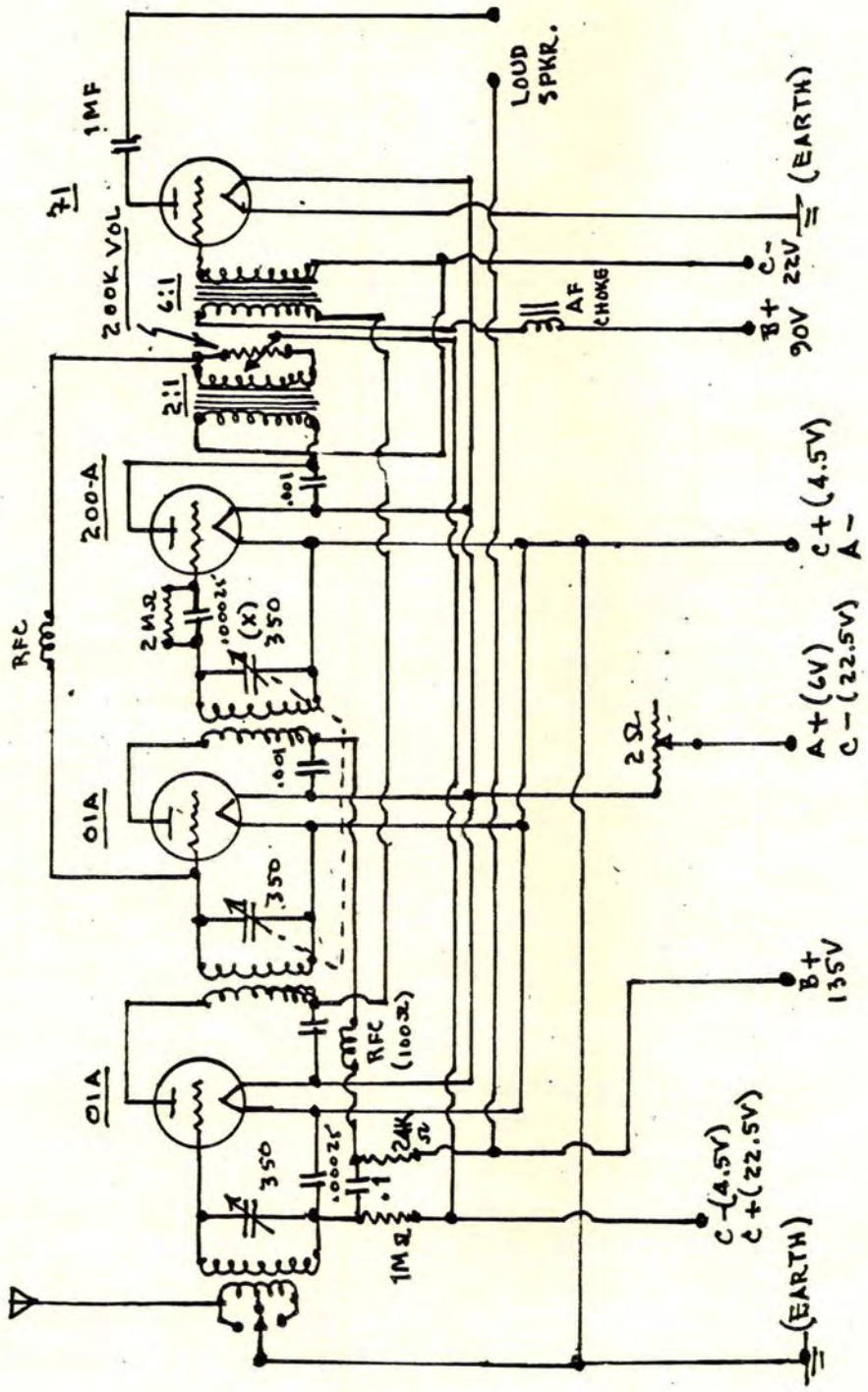

(2) 22.5V "C"-BATTERIES REQUIRED.
(1) 4.5V "C" BATTERY.
(X) = BAND-SPREAD 15 MMFD. (INSTALL @ (X)).

HAGERMAN 210 AC-SIX, 1928; Sht. 1

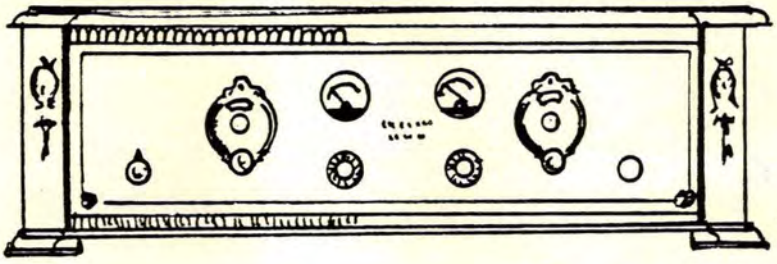

SEE SHT. 2 FOR RCVR. SCHEMATIC & LAYOUT.

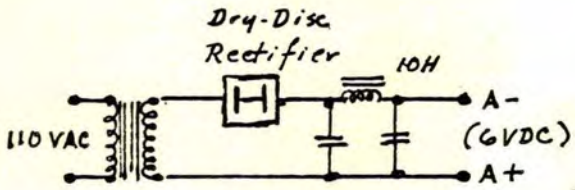

ABOX "A" UNIT

NOTE: 200K MFD Filter Capacity!

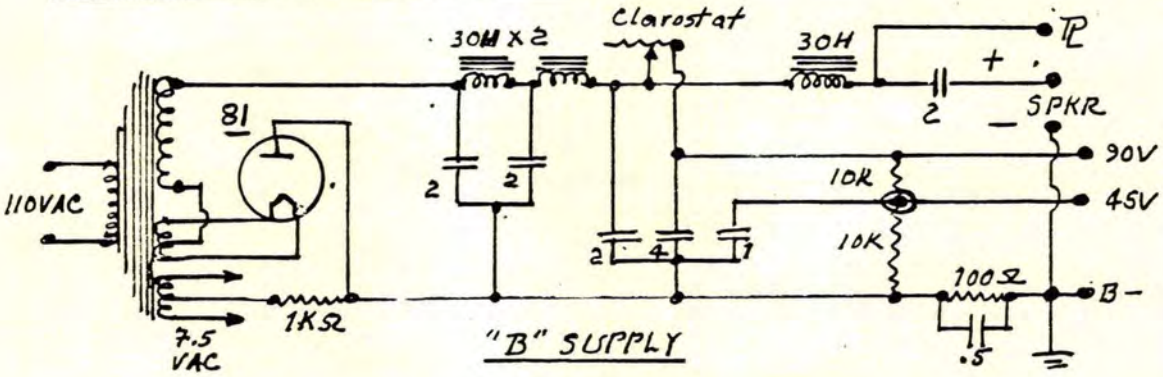

"B" SUPPLY

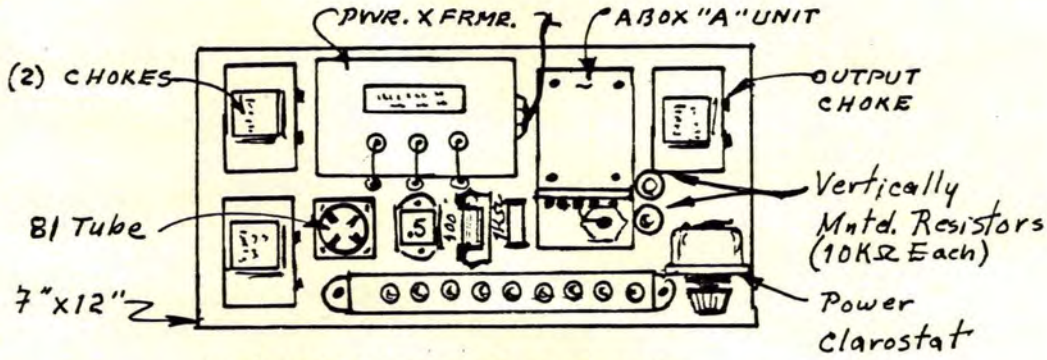

"B" POWER SUPPLY DERIVED FROM THORDARSON R-210 PWR. COMPACT (q.v.)

(CB 3-28)

HAGERMAN 210 AC-SIX, 1928; Sht. 2

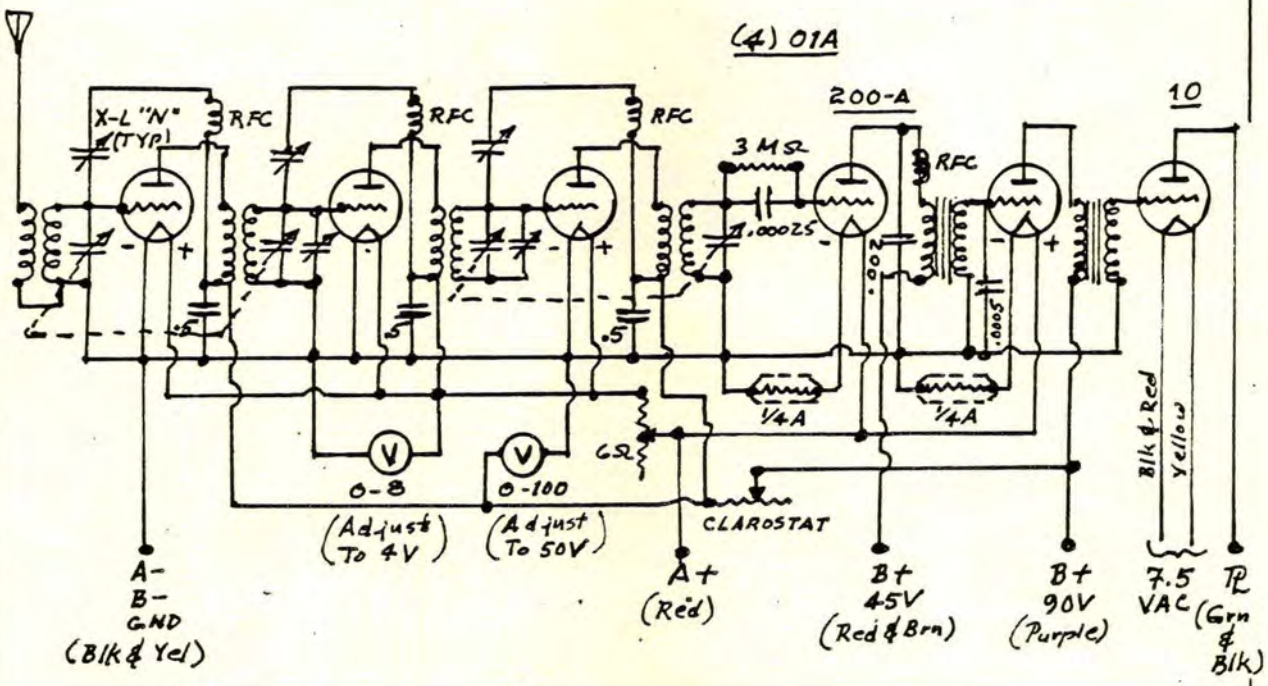

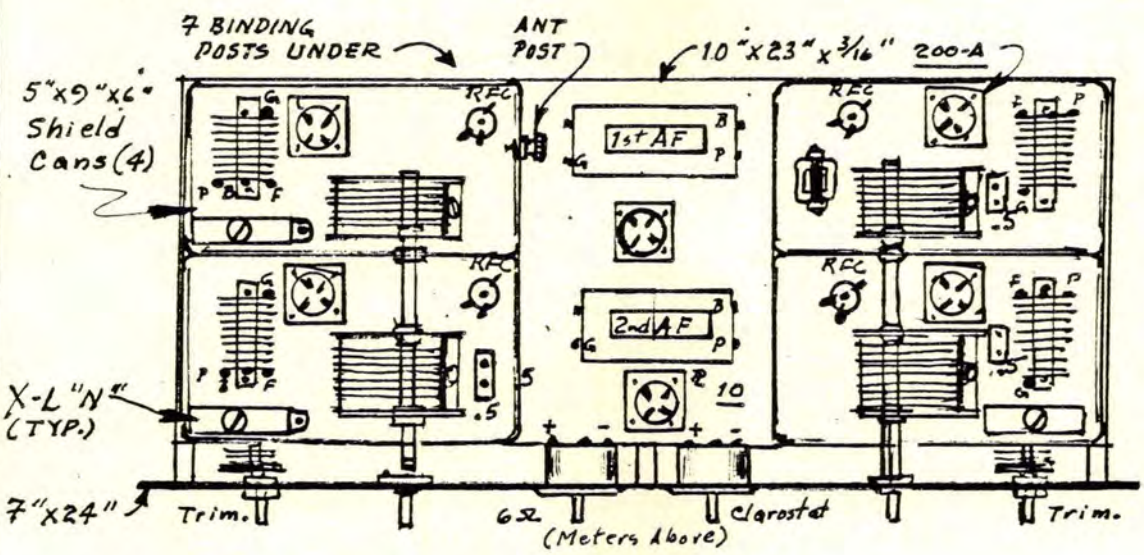

PLAN VIEW of BASE

.002
.0005
(2) Ameperites } Underside of Base

PRINCIPLE PARTS

(3) Sub-Panel Brkts. (Karas)
Meters = Jewell 135
(4) Karas Type 17 Variables (370)
(2) Karas Type 28 AF Xfrmrs.
(4) RFC = Hammarlund 85 mH
(3) X-L Variodensers, "N" Type
(2) Nat'l. Illuminated Dials
(2) Hammarlund Midget Variables

HALLDORSON S.G. 56, 1929

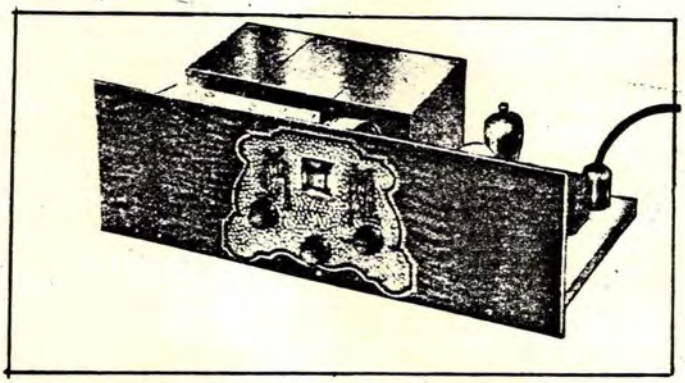

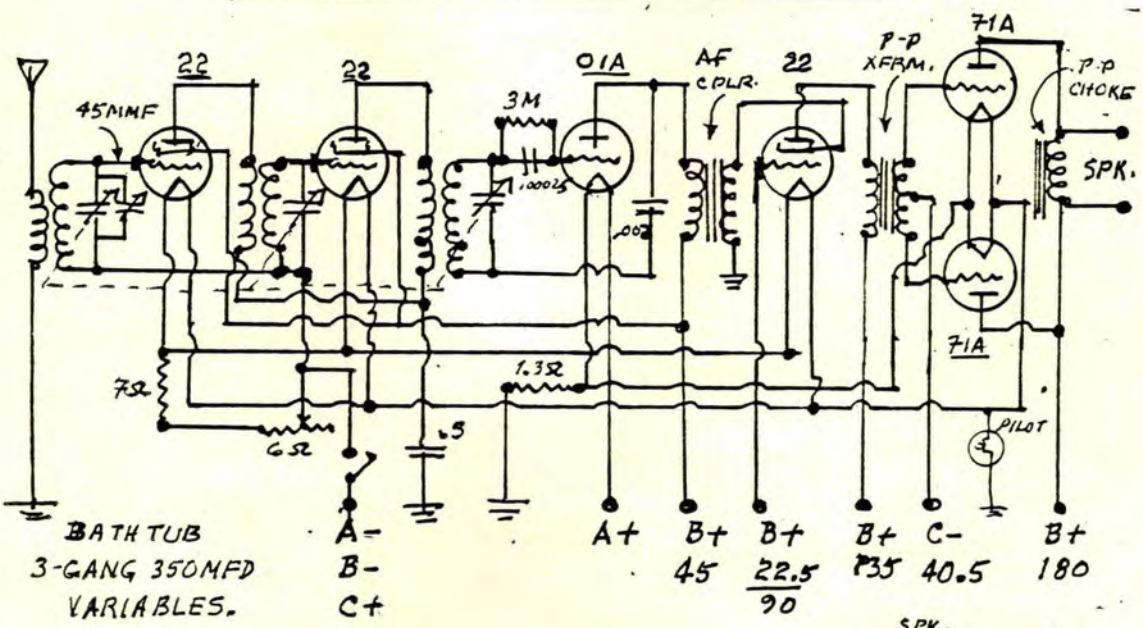

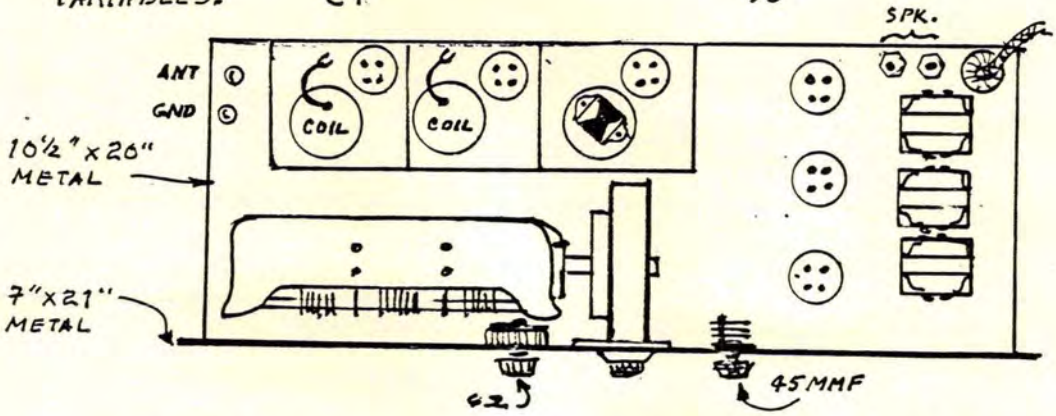

HALLDORSON RF XFRMRS., AF XFRMRS., POSTS & JACKS.

(CB Fall 28)

A.F.HENNINGER "6" T.R.F., 1926

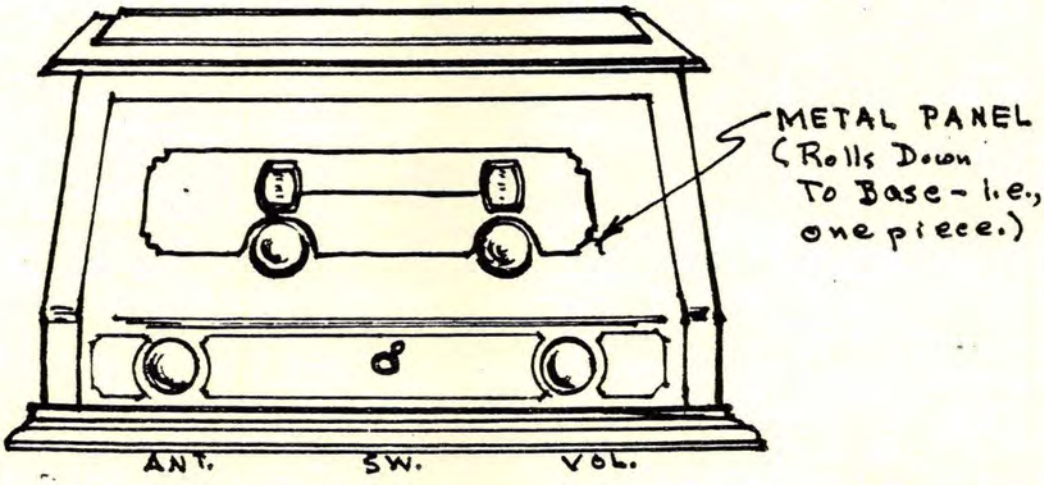

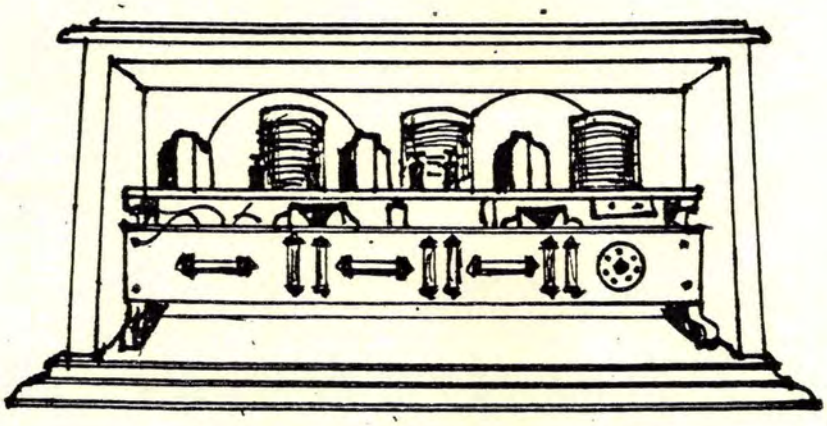

2 STAGES T.R.F.
DETECTOR
3 STAGES R-C AF AMPLIFICATION
3 INDUCTANCES = D-COIL TYPE, q.v.
SUB-PANEL MOUNTED SOCKETS
3 VARIABLES; ONE TANDEM (R.H.)
(4) BINDING POSTS

2-TONE MAHOGANY
CABINET

(RN 8-26)

H.B. "COMPACT" RECEIVER, 1929

(SHT. 1)

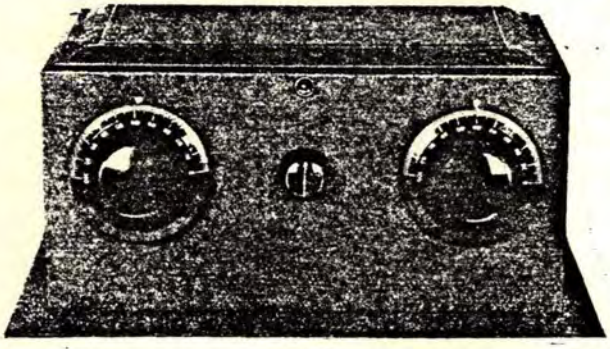

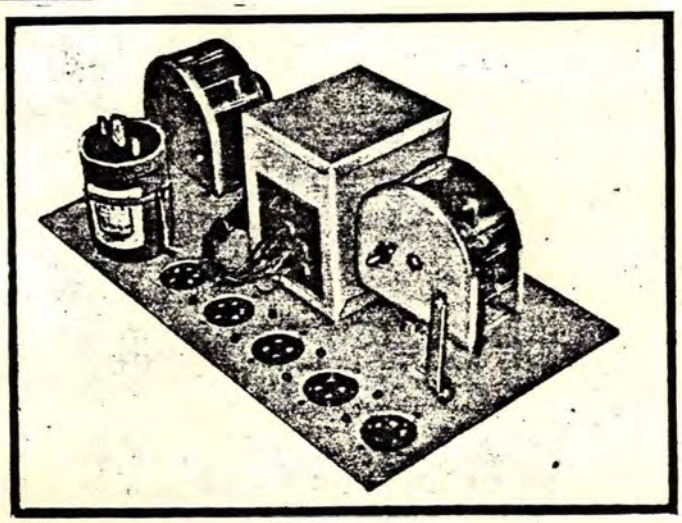

O/A = 9½" x 15" x 7"

AC & BATTERY MODELS IDENTICAL IN CONFIGURATIONS.

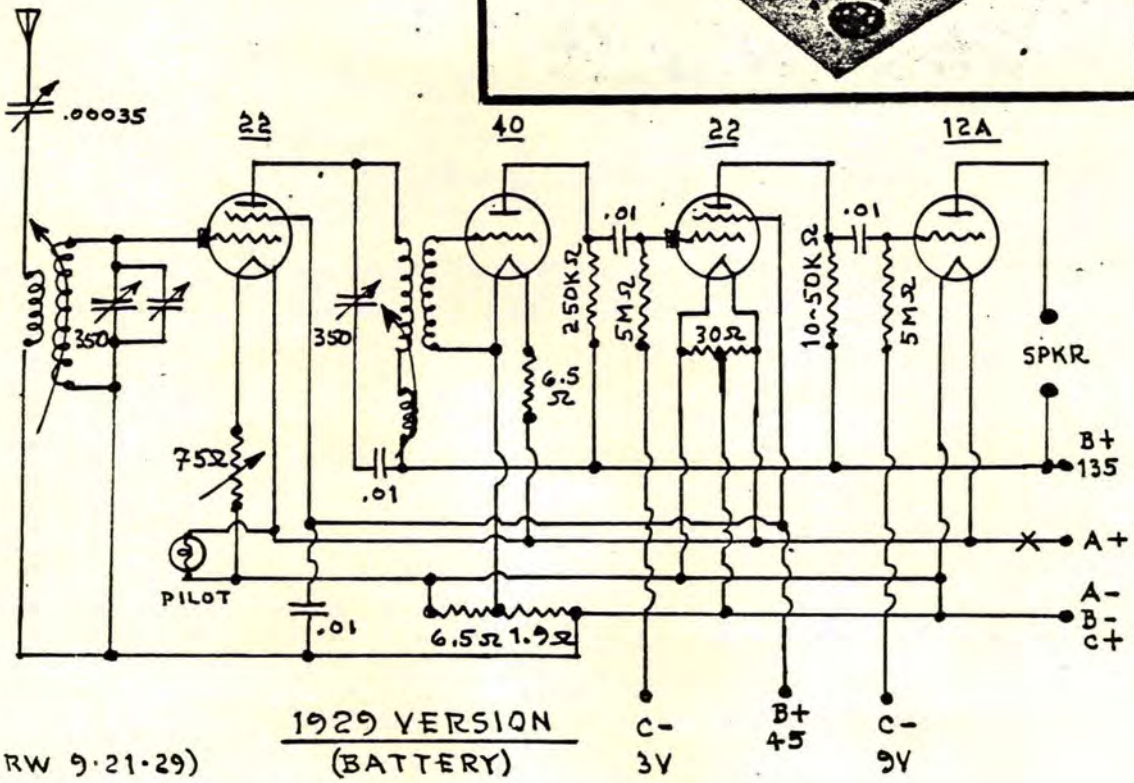

(RW 9·21·29)

1929 VERSION
(BATTERY)

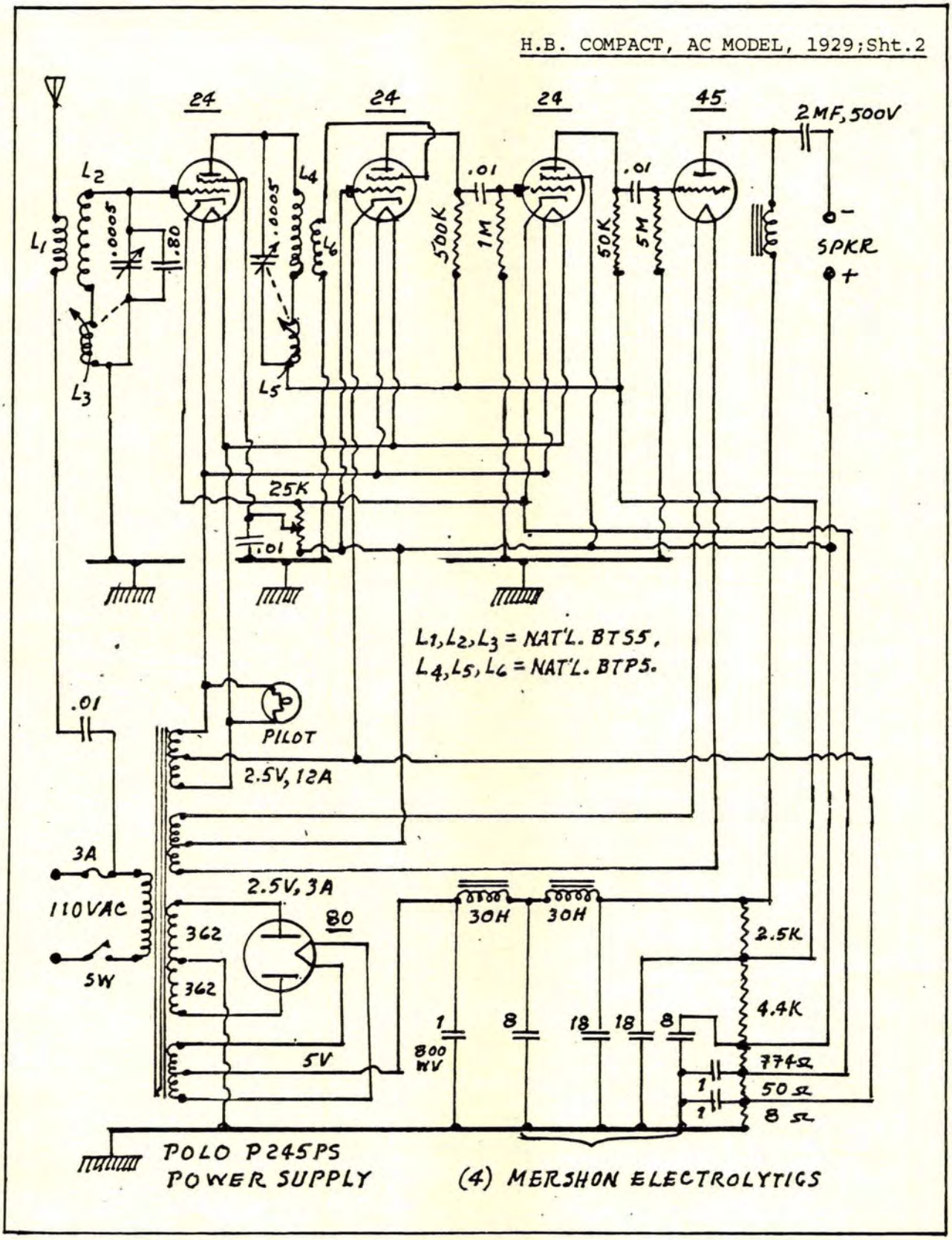
H.B. COMPACT, AC MODEL, 1929;Sht.2
24
24
24
45
2MF, 500V
L2
L1
.0005
.80
.0005
L4
L6
L3
L5
.01
500K
1M
.01
50K
5M
SPKR
-
+
25K
.01
L1,L2,L3 = NAT'L. BT55,
L4,L5,L6 = NAT'L. BTP5.
.01
PILOT
2.5V, 12A
3A
110VAC
SW
2.5V, 3A
80
362
362
5V
30H
30H
2.5K
4.4K
1
800 WV
8
18
18
8
774Ω
1
50Ω
1
8Ω
POLO P245PS
POWER SUPPLY
(4) MERSHON ELECTROLYTICS

HARKNESS "COUNTERPHONIC" VARIANTS

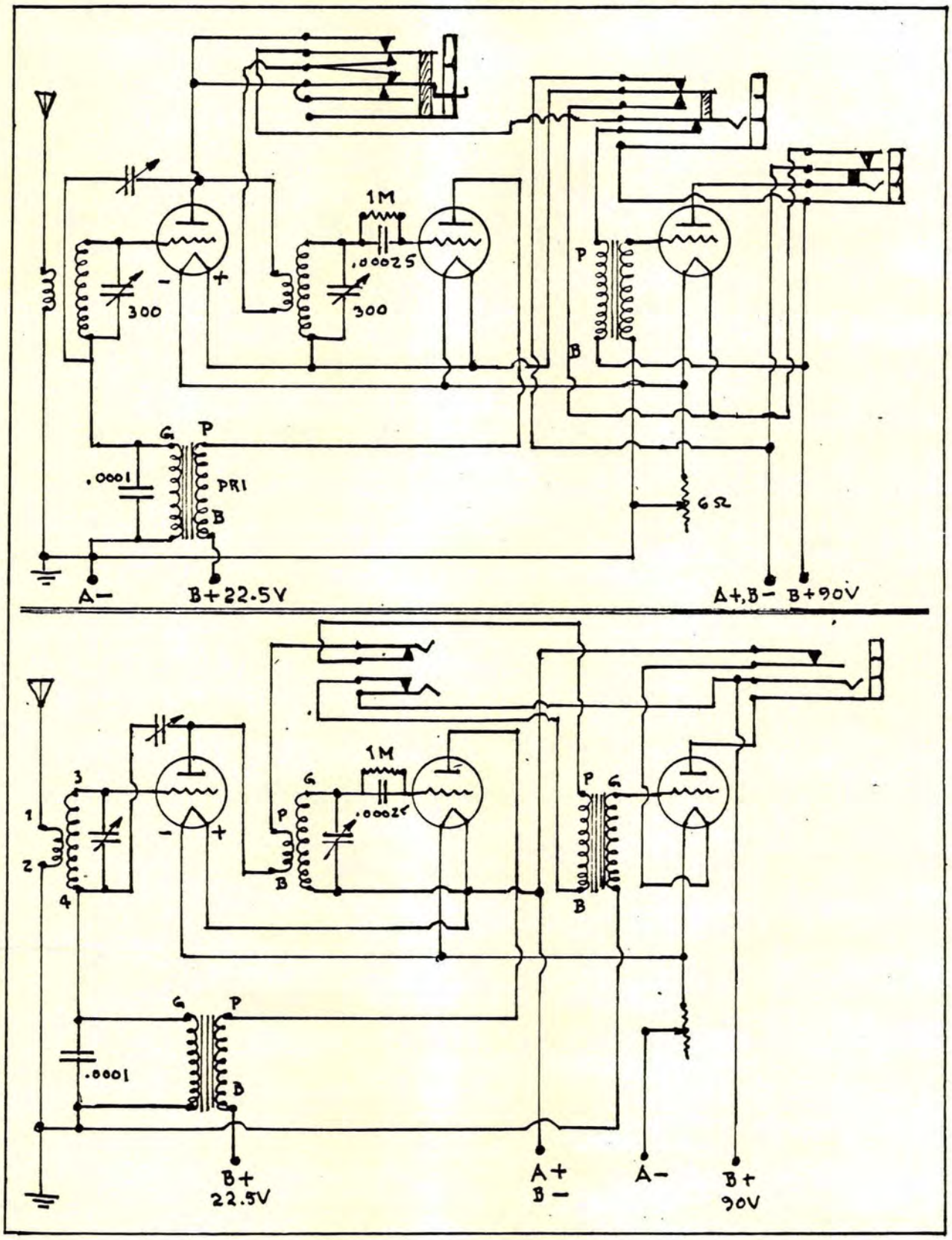

HARKNESS "COUNTERFLEX" 1924/1925;Sht.1

7"x18"x 3/16"

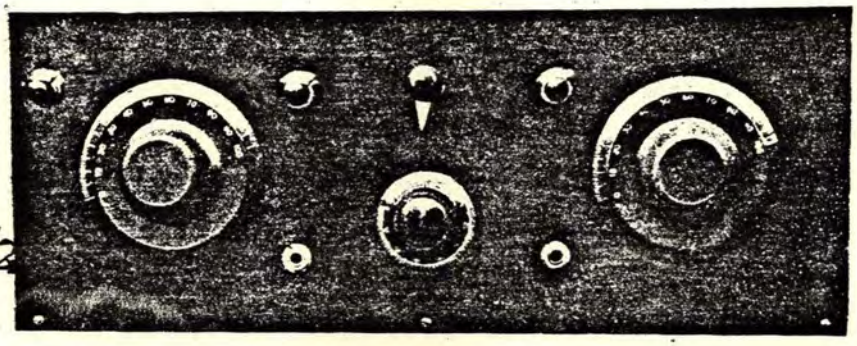

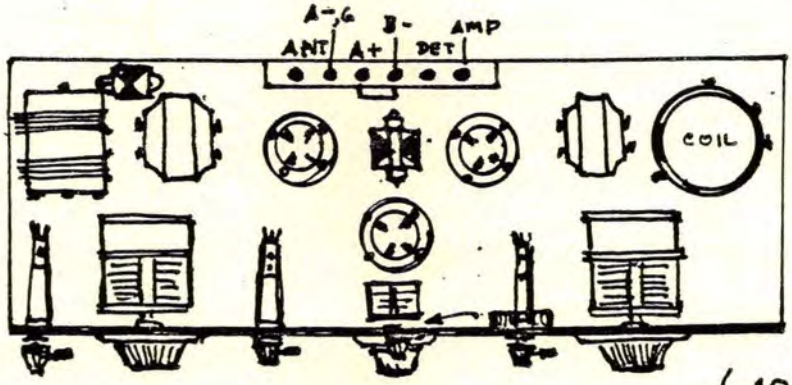

(1924)

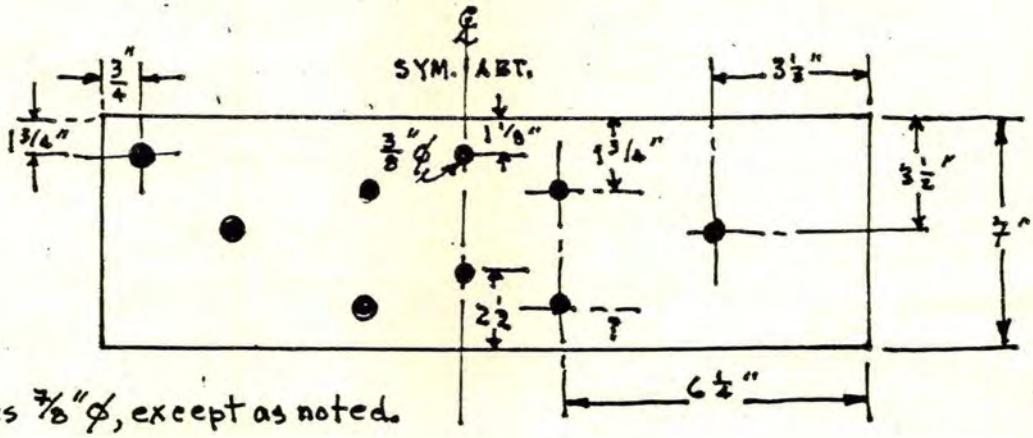

All holes 7/8" ⌀, except as noted.

HARKNESS "COUNTERFLEX" 1925 MODEL
(Sht. 2)

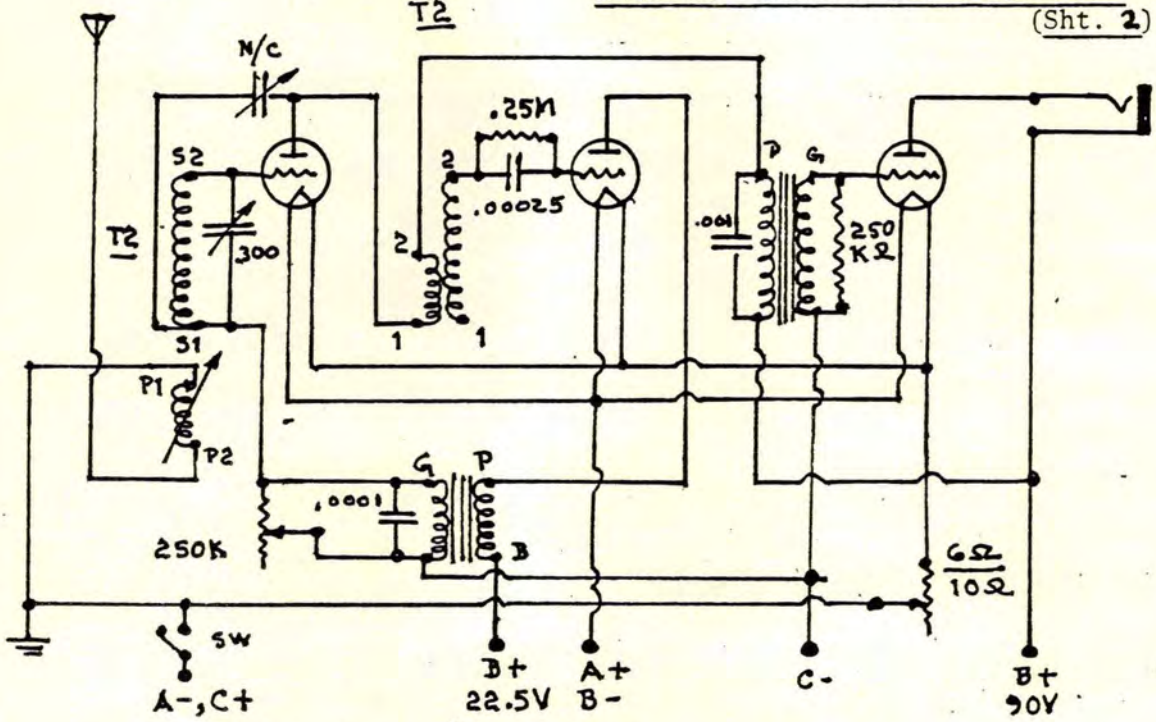

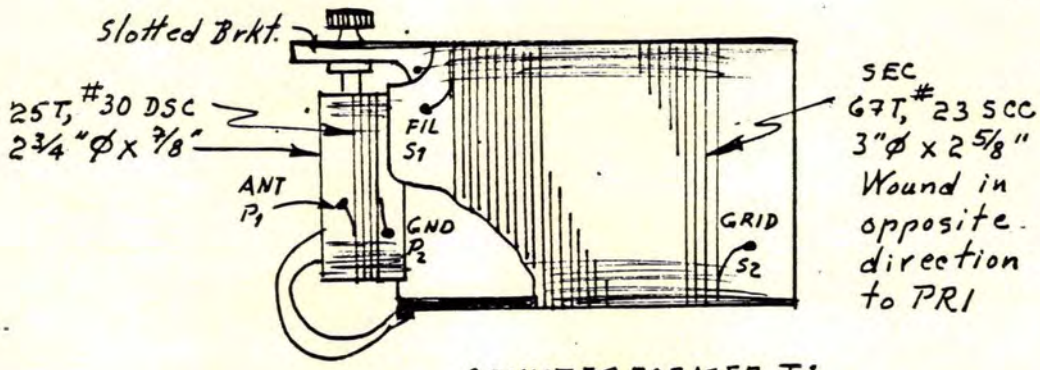

COUNTERFORMER T1

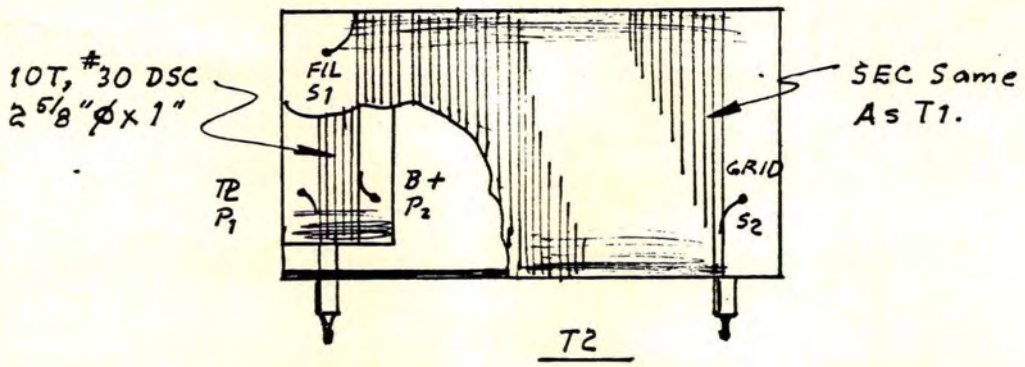

T2

HARKNESS "COUNTERFLEX", 1925: Sht. 3

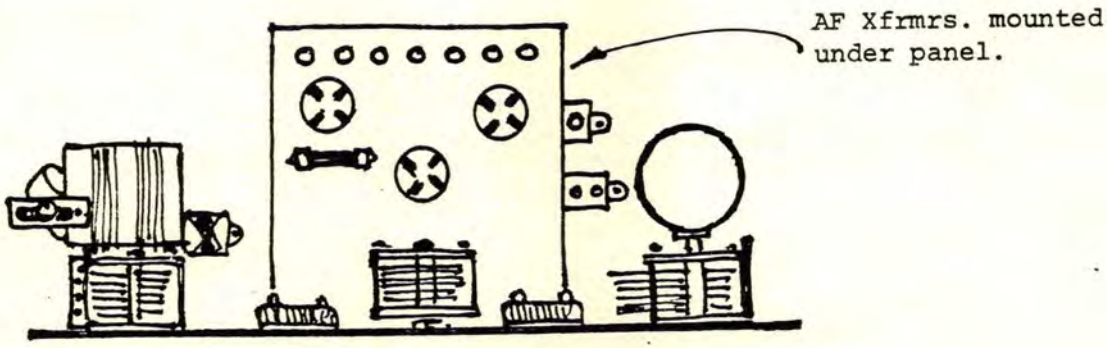

1925 VERSION LAYOUT (See Sht. 1)

PARTS FOR SCREEN-GRID MODEL, 1929 (See Over-Leaf)

Hammarlund Drum-Dial
USL Variables, 350 mmfd (3)
Binding Posts (9)
Saturn Switches (2)
Fixed Resistors: 1/10/2M Ohms
Condensers: .5(3)/.0001(3)/.001/ .00025

Harkness RF Coil SG-10
Harkness RF Coil SG-50 (2)
Harkness AF Xfrmr. T-500
Harkness DI AF Xfrmr. T-2
Harkness AF Output Unit T-3
Harkness Sub-Panel Brkts. (2)
Pot. 500K

1925 VERSION "Counterflex"

HARKNESS SCREEN-GRID DELUXE RECEIVER
(Sht. 1) (1929)

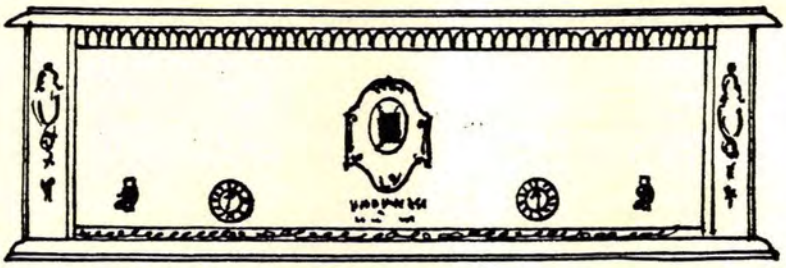

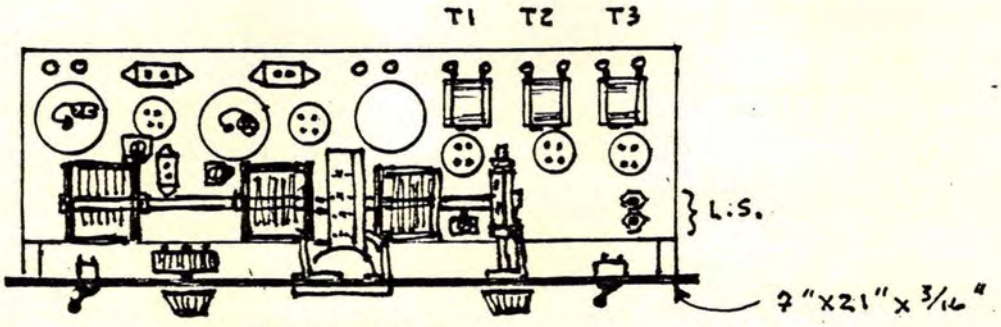

PLAN VIEW

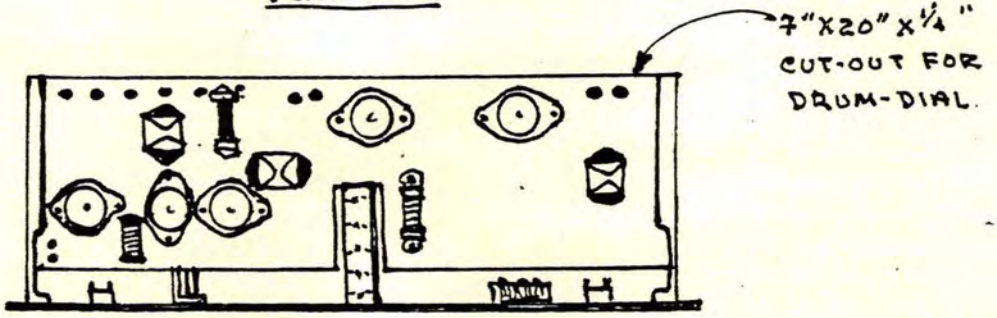

BOTTOM VIEW

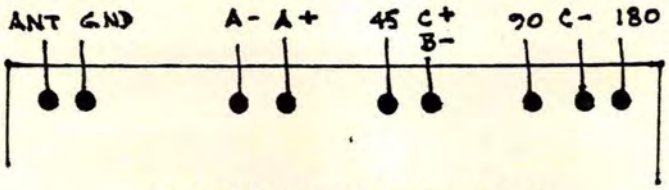

BATTERY CONNEXIONS

(CB 1-29)

HARKNESS SCREEN-GRID DELUXE RECEIVER,1929
(Sht. 2)

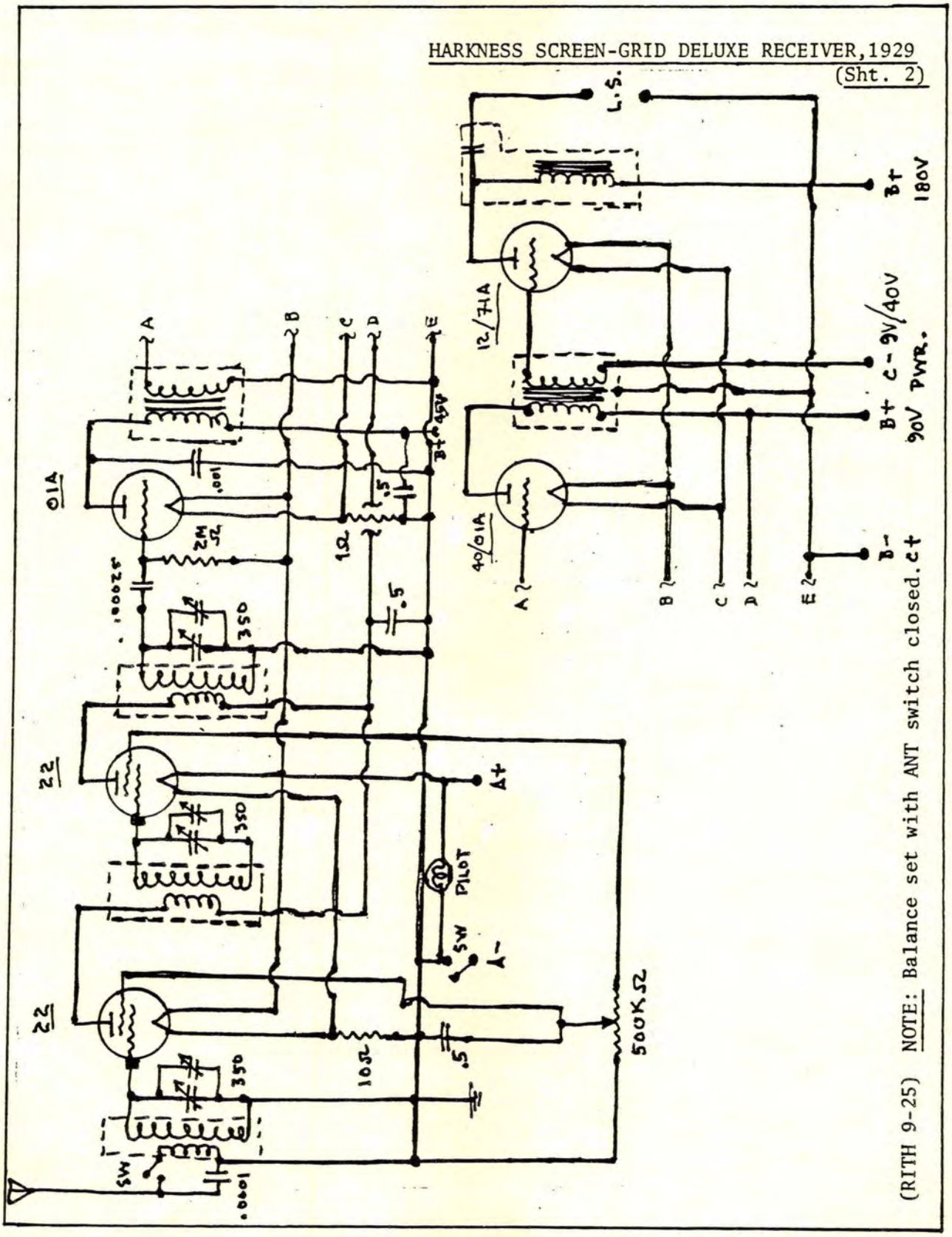

(RITH 9-25) NOTE: Balance set with ANT switch closed.

HAYNES DX RECEIVER, 1923

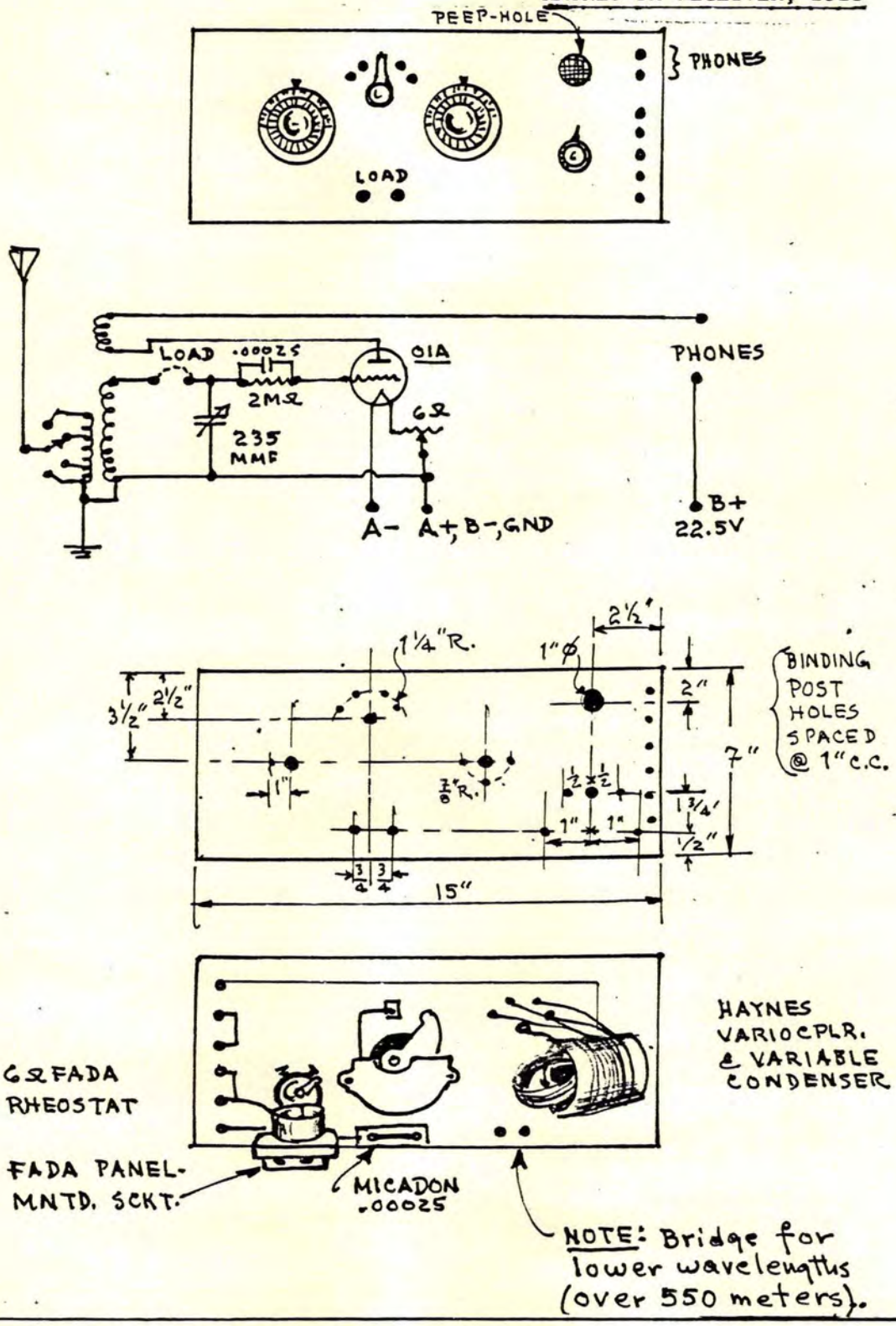

HAYNES DX-2 "MULTIVALVE" RECEIVER, 1927

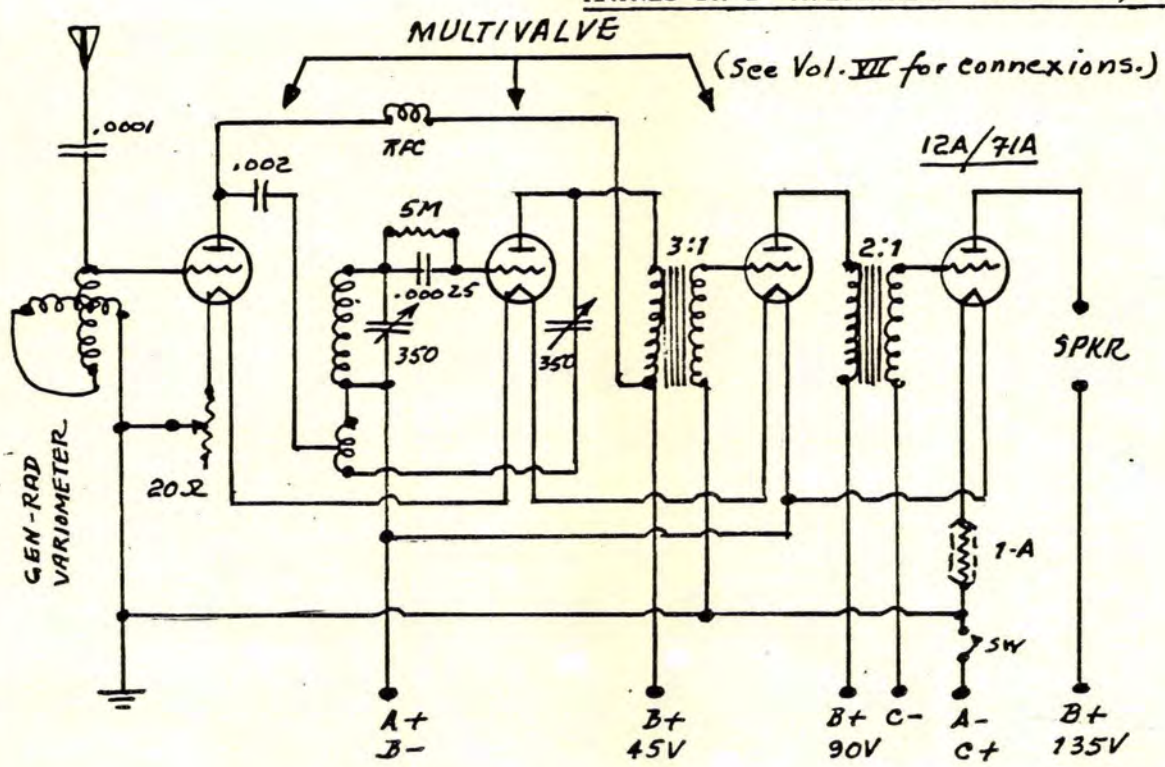

RFC = 300T, #28/30 DSC (wound on a Sewing Thread spool).
PANEL = 7"x17"x3/16" Formica.
BASEBOARD = 7"x17"x½".

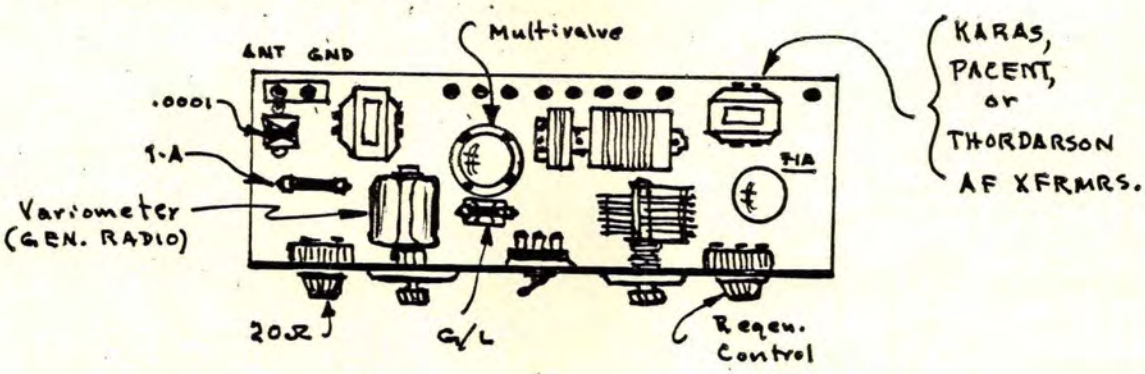

NAT'L. VERNIER DIALS →

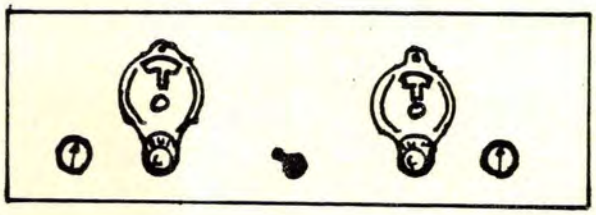

(CB 3-27)

HAYDEN DX-FOUR RECEIVER, 1927

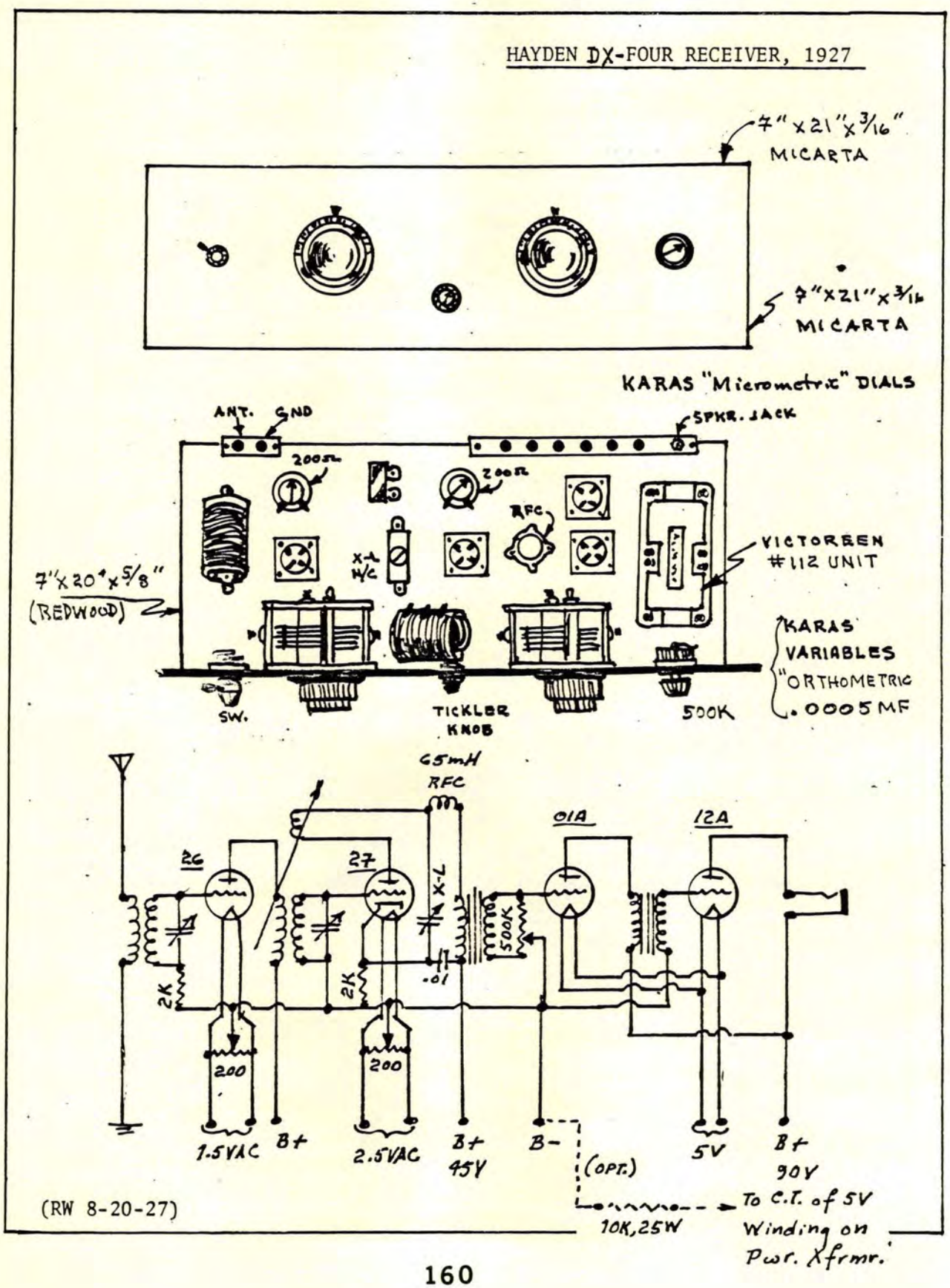

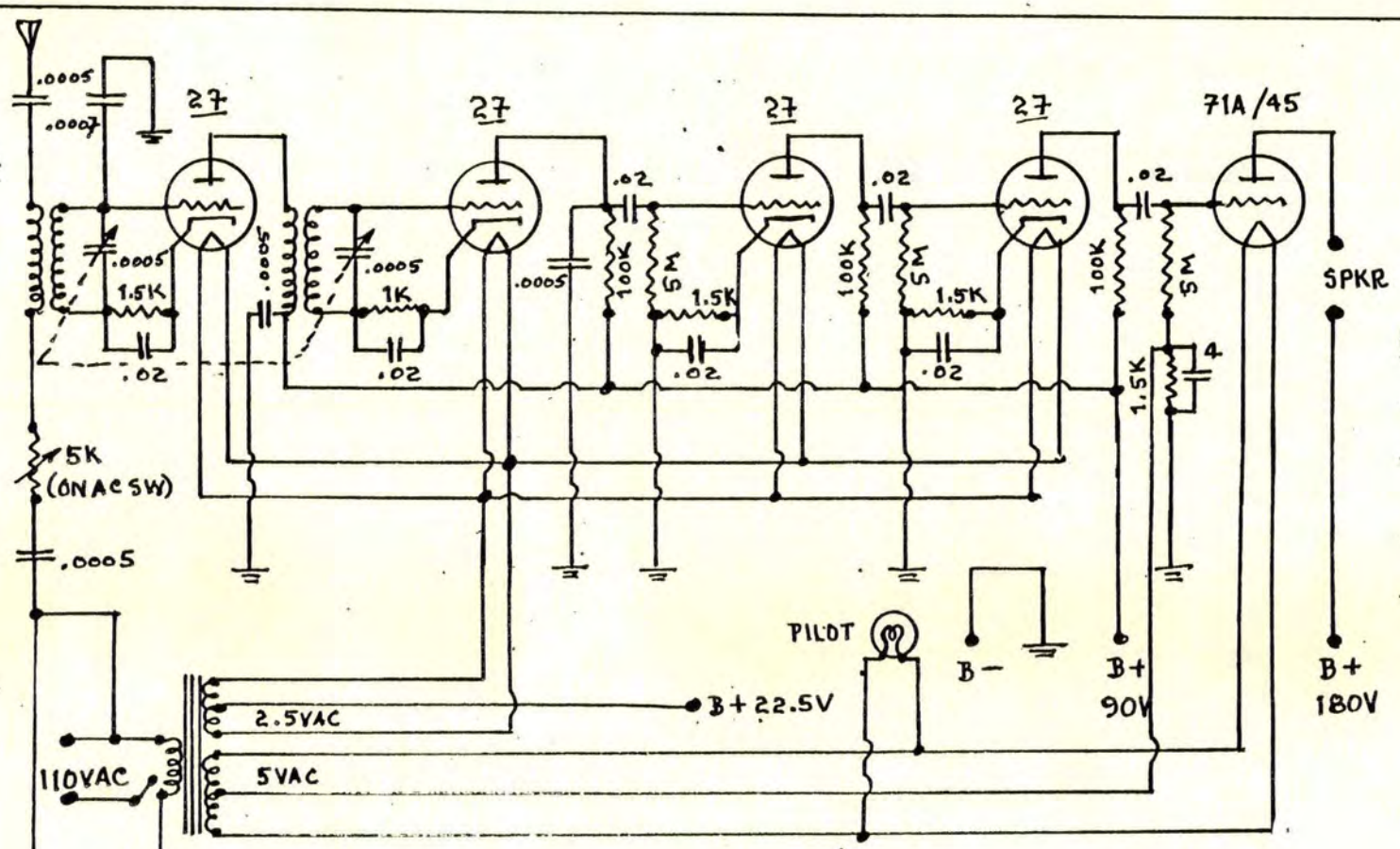

TO TAPS ON
PWR. UNIT
ELECTROLYTICS
(18MFD Total)

1. National "Velvet B", Type 3580 Power Unit.
2. Aluminum chassis is GND.
3. Panel = 7" x 24".
4. Base (Chassis) = 11" x 23" x 2".
5. If squeals occur, insert grid-suppressor and an 800-ohm resistor at 1st Grid of the 1st Tube.

HAYDEN AC-4 RCVR.: 1929

HAYDEN "Midget 3" RCVR., 1929

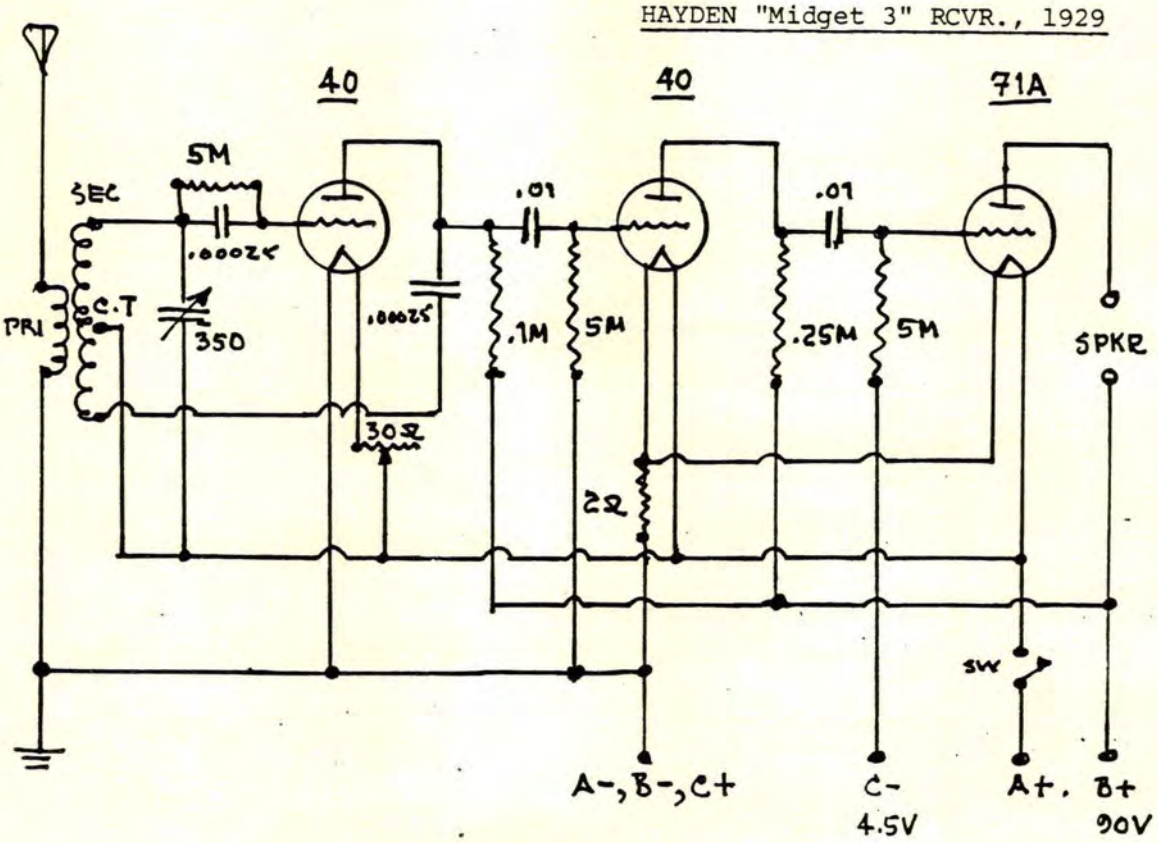

SWITCH MOUNTED ON 30Ω RHEOSTAT.
01A TUBES MAY BE USED, w/ LESS VOLUME.
ORIGINAL TUBES WERE "KELLY".

TUNING COIL, IN ANT CIRCUIT, = 1"Ø FORM
200T #30 SSC, C.T.
PRI = 40T, WOUND OVER SEC, w/ FISHSKIN INBETWEEN.

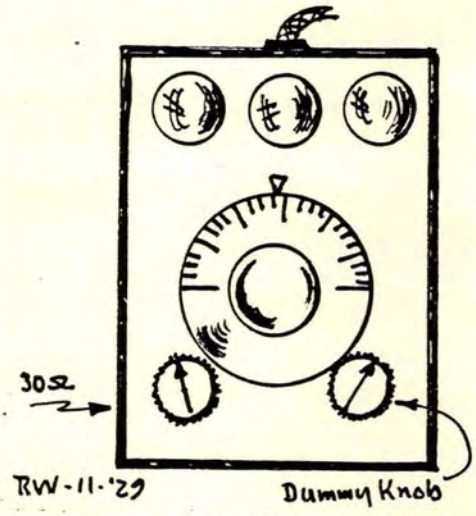

ORIGINAL CONFIGURATION ~
BAKELITE PANEL;
WALNUT BOX.
5½" x 7¾" x 3"
(Need not be followed; breadboarding is just as efficient.)

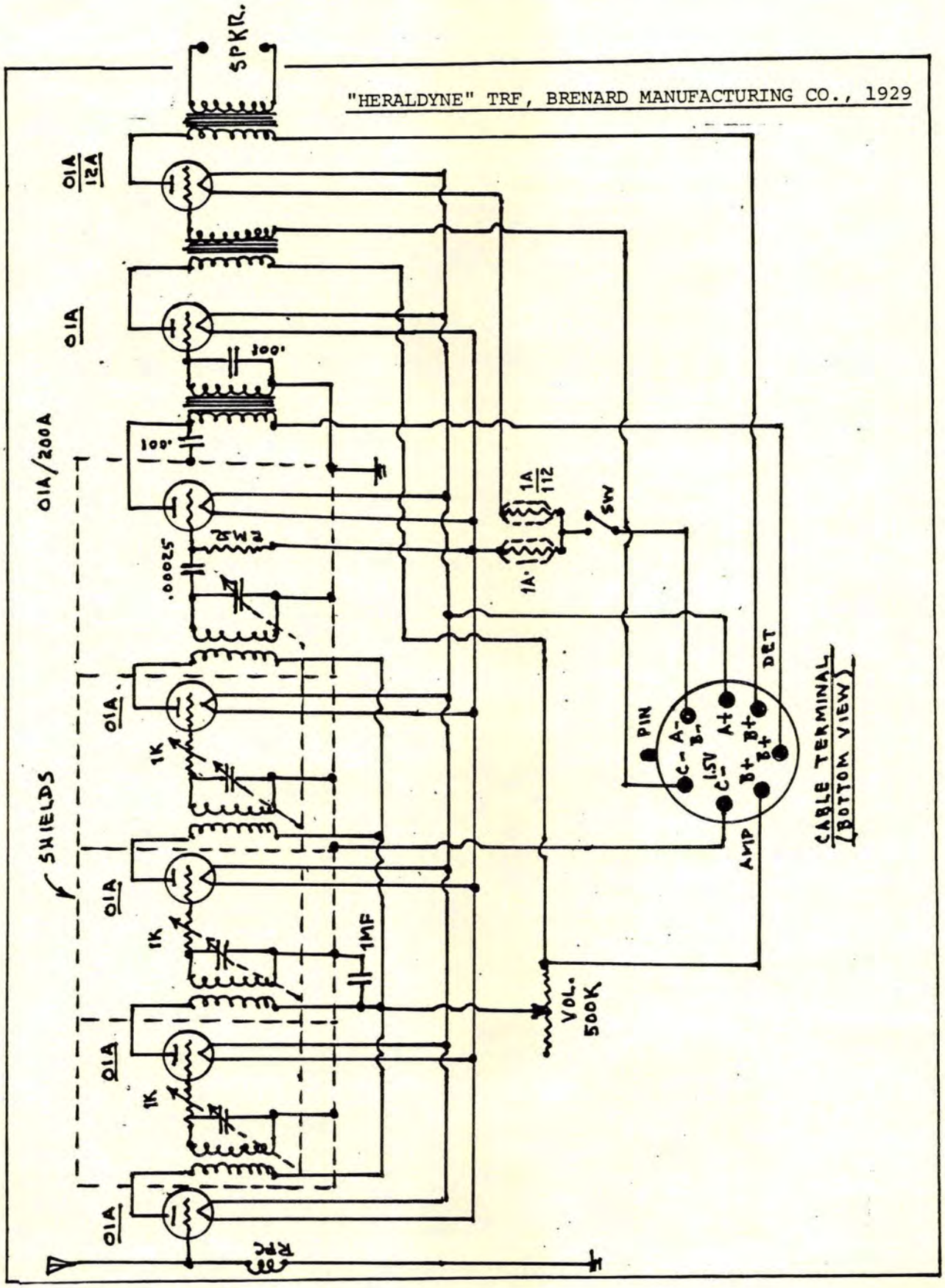
"HERALDYNE" TRF, BRENARD MANUFACTURING CO., 1929
SPKR.
01A/12A
01A
01A/200A
SHIELDS
01A
1K
01A
1K
01A
1K
01A
.001
.001
.00025
2MΩ
1A/112
1A
SW
1MF
VOL. 500K
RFC
PIN
C-
A-
B-
1.5V
C-
A+
B+
B+
B+
DET
AMP
CABLE TERMINAL (BOTTOM VIEW)

KARAS AC "EQUAMATIC", 1928; Sht. 1

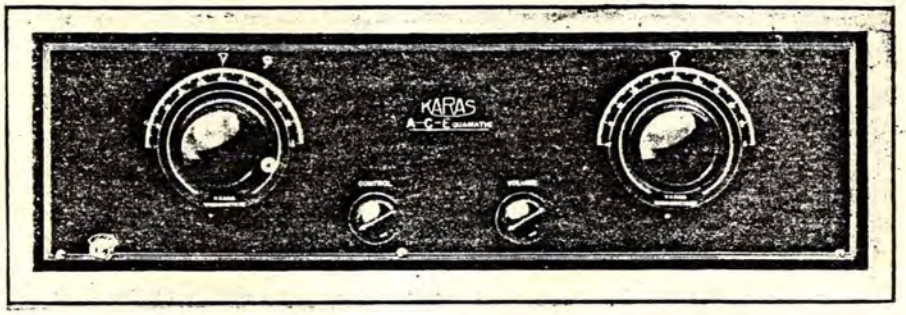

While the AC "Equamatic" was merely an electrified version of the battery-operated "Equamatic", it turned out to be a much better thought-out design. In the two cuts shown below comparison may may be made as to the physical differences, also the obvious similarity of components used.

However, if you have the battery-operated "Equamatic" it is a simple matter to electrify it without changing anything basic to the design. The KARAS Control System may be ignored, as it merely offered a dubious convenience.

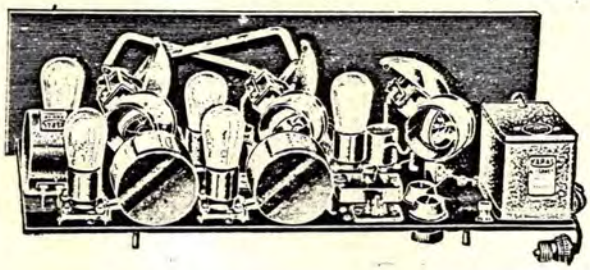

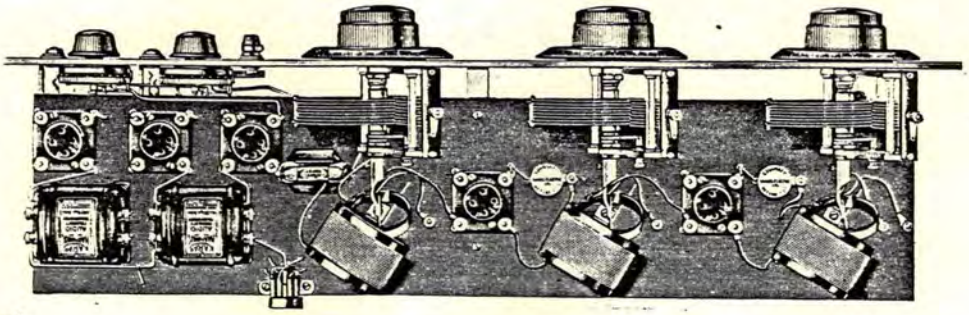

(RW 2-11-28)

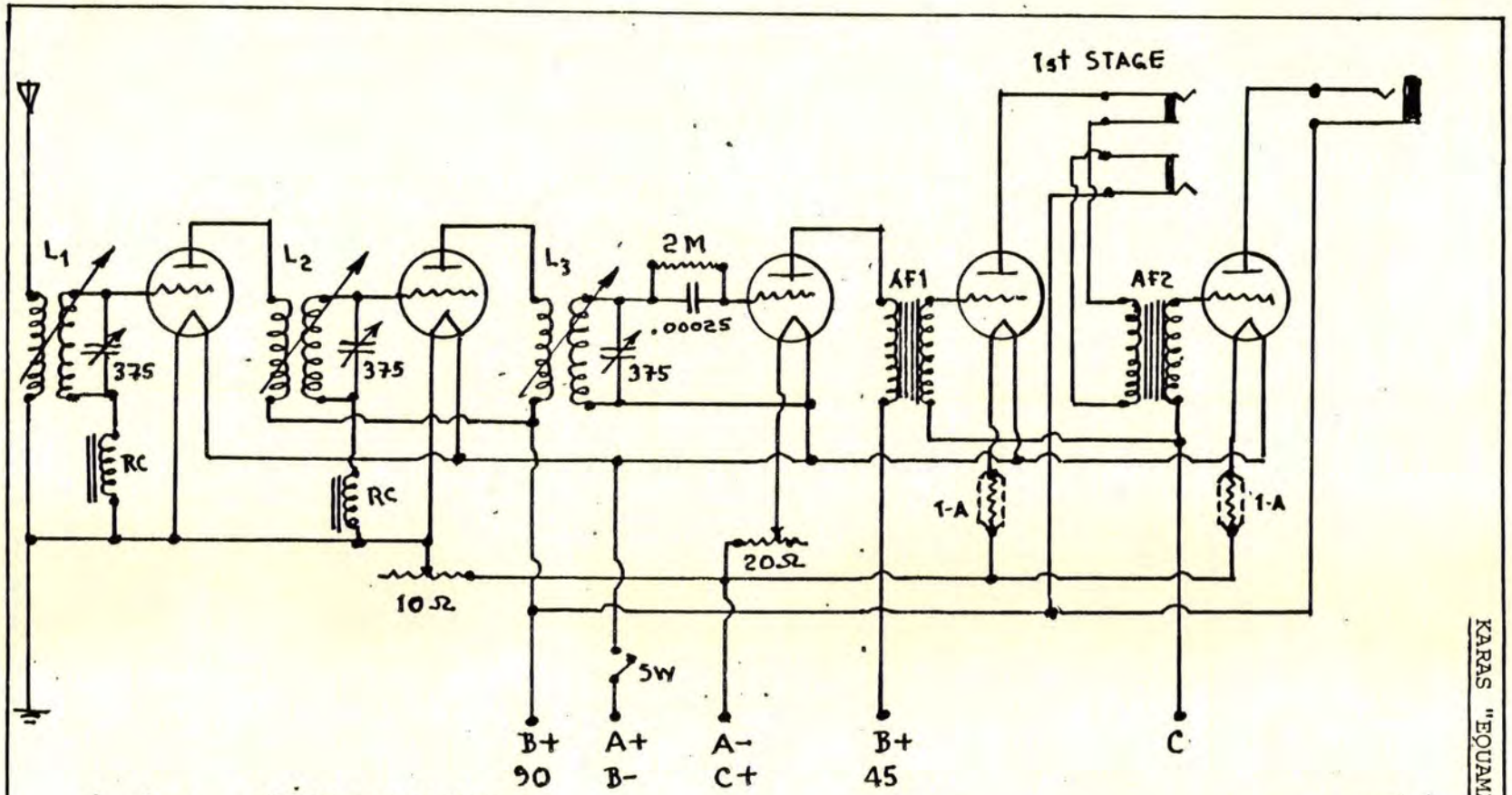

L_1, L_2, L_3 = KARAS RF XFRMRS.
RC = KARAS "RETARD COIL".
AF1, AF2 = KARAS "HARMONIK" AF XFRMRS.
(3) KARAS "MICROMETRIC" VERNIER DIALS.
JONES MULTIPLUG W/ 8-FT. CABLE.
(3) KARAS SUB-PANEL BRACKETS.
PANEL = 7" x 28" x 3/16".
(5) BENJAMIN CUSHION SOCKETS.

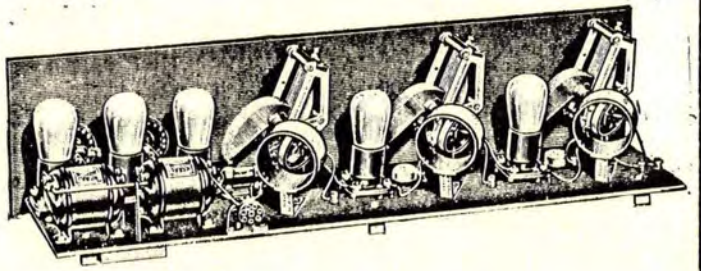

KARAS "EQUAMATIC" TRF. 1926; Slt. 2

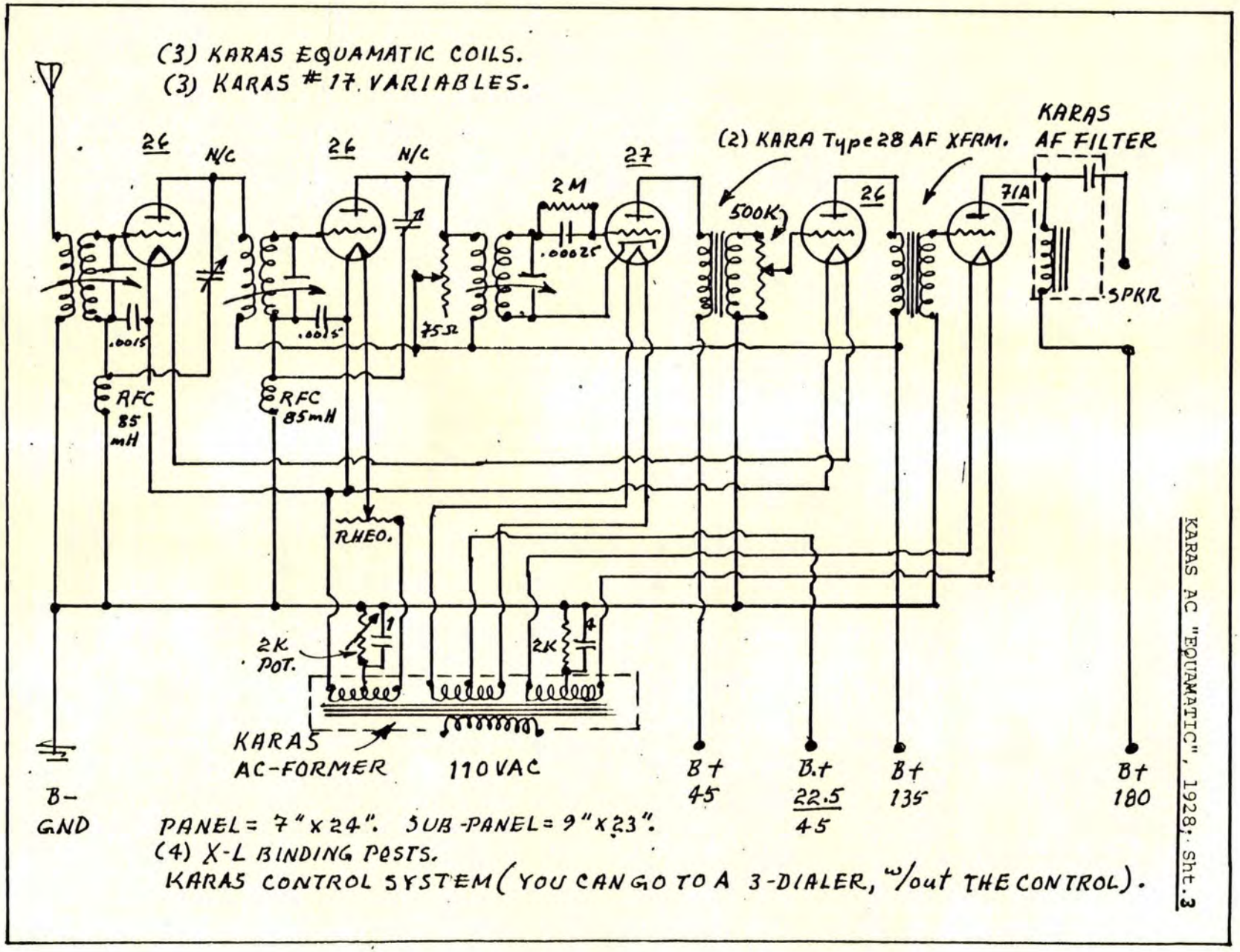

KARAS AC "EQUAMATIC", 1928; Sht.3

KARAS "KNICKERBOCKER FOUR", 1927

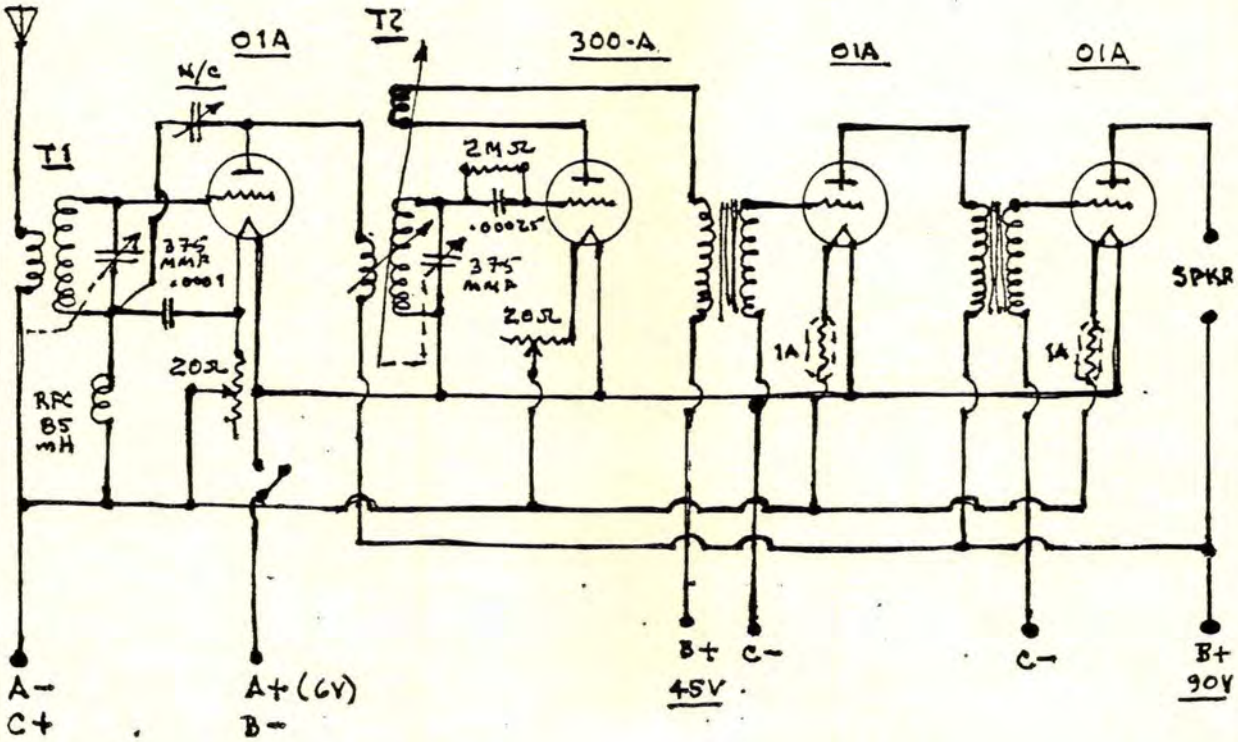

T2 = KARAS 3-CIRCUIT TUNER
T1 = KARAS INDUCTANCE
(2) VARIABLES ~ KARAS 370 MMF
FIL. SW. = YAXLEY #10 MIDGET
X-L ANT. BINDING POST (1)

(2) KARAS "Harmonik" AF XFRMS
(2) TIP JACKS (SPKR.)
PANEL = 7" X 18" X 5/16" FORMICA
SUB-PNL. = 7" X 17" X 3/16" "
(2) KARAS SUB-PNL. BRKTS.

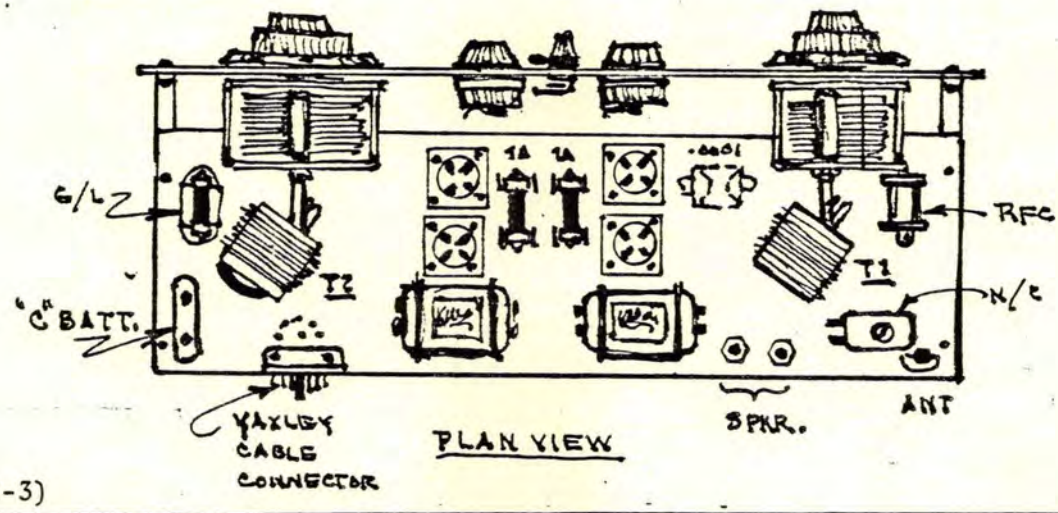

PLAN VIEW

(CB II-3)

KENNEDY MODEL 20-B AC RCVR., 1927

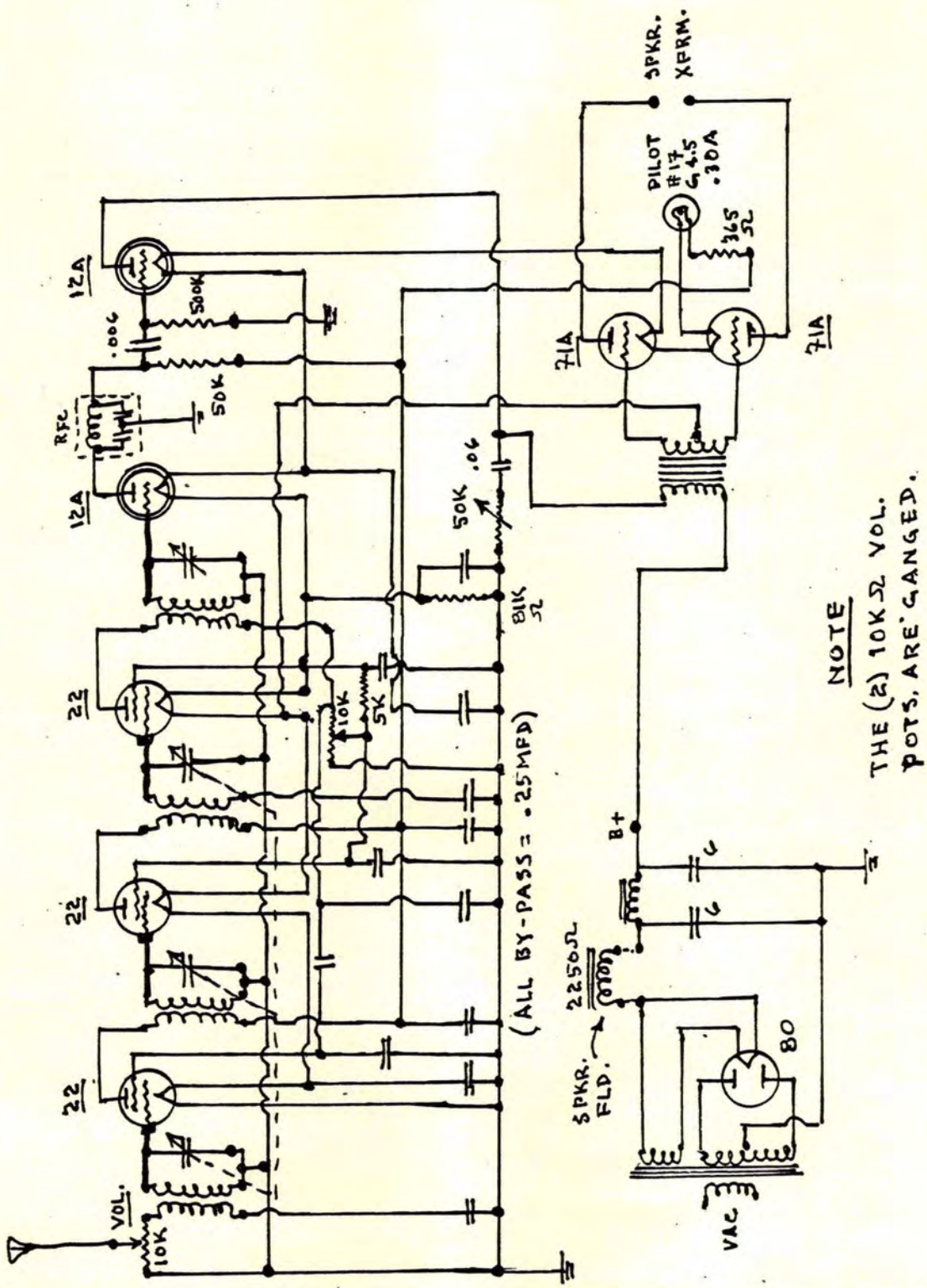

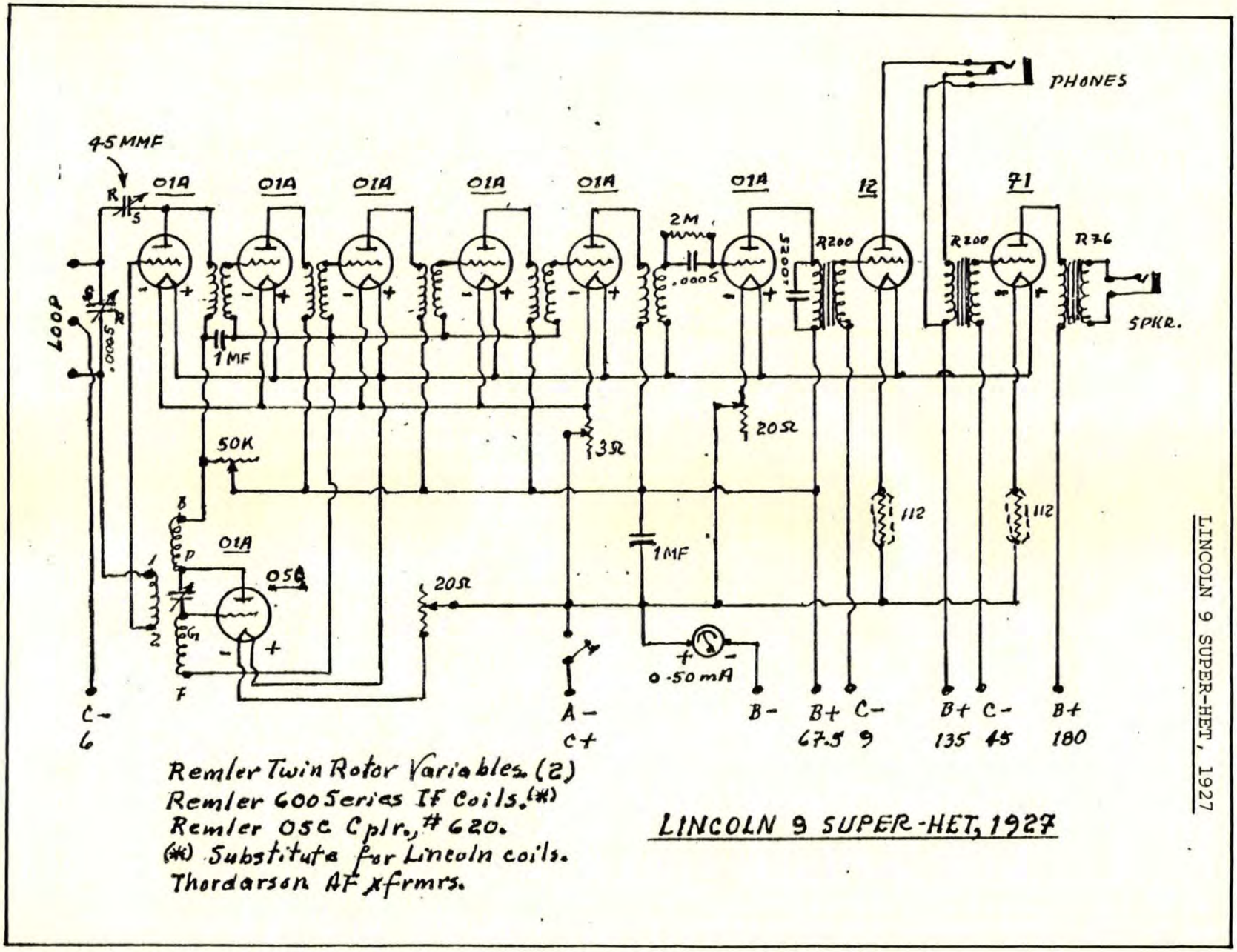

LINCOLN 9 SUPER-HET, 1927

LODGE "N" RECEIVER, 1927: Sht.2

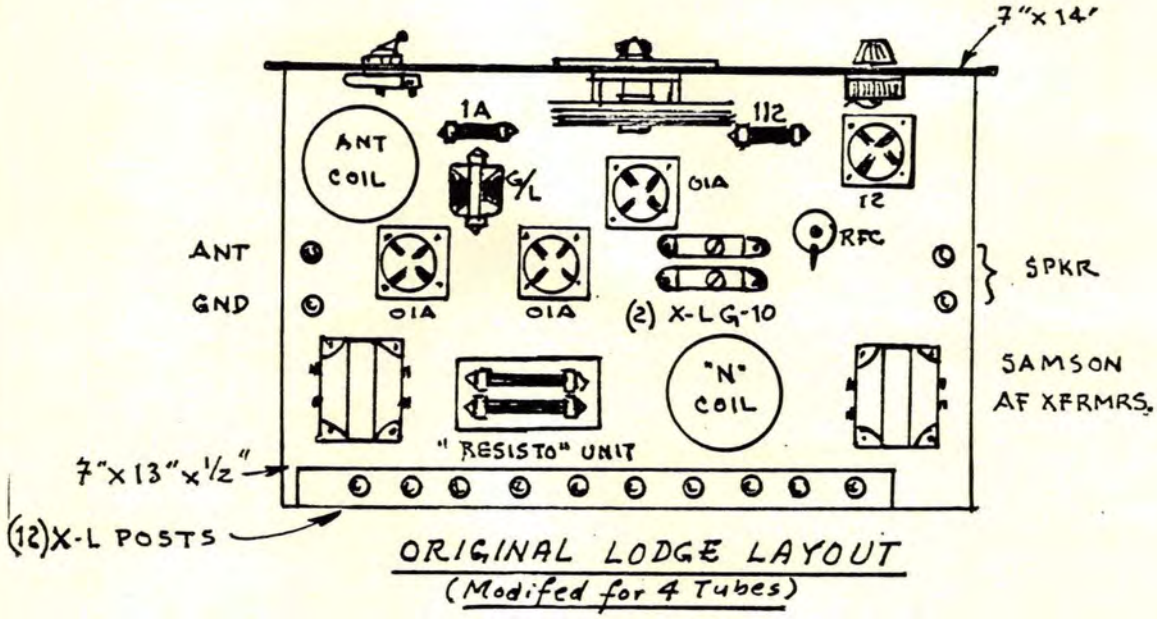

ORIGINAL LODGE LAYOUT
(Modifed for 4 Tubes)

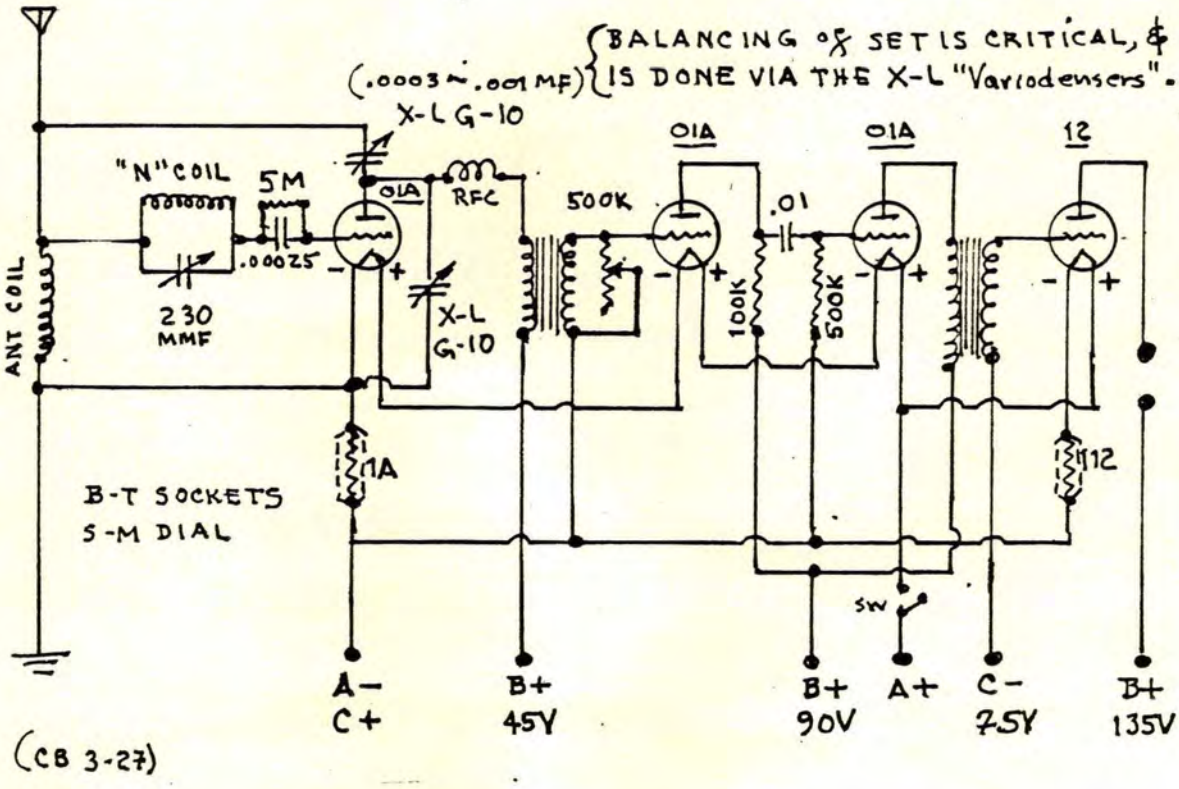

(CB 3-27)

(Sht. 1)

THE LOFTIN-WHITE PRINCIPLE

The long enduring fame of Loftin and White rested primarily on their advances in AF circuitry, an ingeneous and innovative amplifying system , fully described in Volume IV of these SKETCH-BOOKS. After selling out to RCA in 1929 little more was heard of them, although what they had contributed to the art was being incorporated into many a commercial receiver.

But in 1926 they designed a TRF receiver, long forgotten by even the most avid Radio buff. It was called the Constant-Coupled B. C. Receiver. The peculiarities of the circuit were written-up in contemporary Radio media as "The Loftin-White Principle of Constant-Coupling".

The Principle turned on the established phenomenon that any coil and variable combination varied in value with any change in frequency, and that such changes occurred in in direct opposition.

By plotting curves for this variation and superimposing the resultant curves, it was apparent that they also compensated each other, so that if a combined coil and variable had their proportionate value correct, the resistance in the circuit would be practically constant irrespective of wavelength or frequency. That was heart of the Principle. The combination of coils and variables was such that the transferring of energy from one circuit to the other was the same at all wavelengths.

Constructional details of the Loftin-White Constant-Coupled receiver of 1926 will be found in the following pages. The use of hi-mu tubes was mandatory for RF amplification, as they did away with the use of regeneration. It was also essential that the FIL voltages were held to 5V. The virtues of the circuit were these:

1. It prevented oscillation and regeneration;
2. It handled all radio frequencies equally well;
3. It gave greater sensitivity, volume, selectivity, fidelity.

Having but one RF stage, the RF could be changed without putting any other circuit out of resonance. Changing the RF was done by PRI coil L1 being shunted by an adjustable condenser, shown as C6 on the following schematic. C6 could also be placed across the SEC, its placement being optional. C6 could also be used to eliminate squealling, which may occur when first turning on the set.

* * *
* *
*

LOFTIN-WHITE CONSTANT CPLD. RCVR., 1927;Sht.2

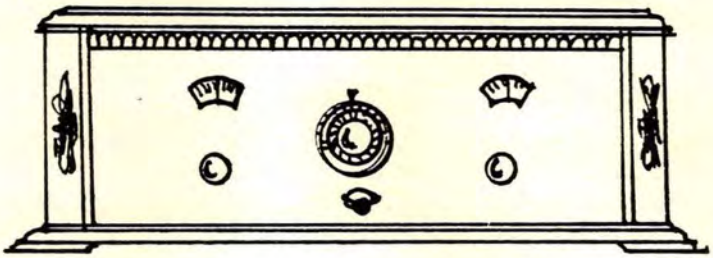

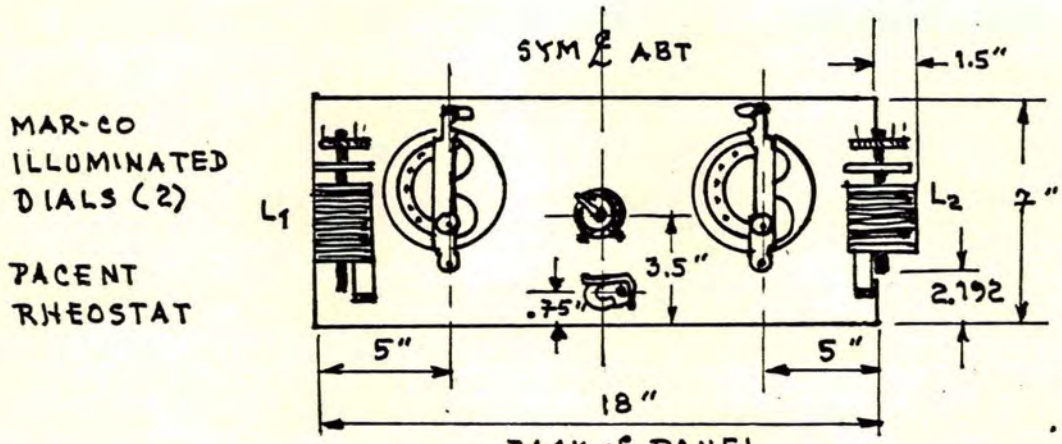

BACK of PANEL

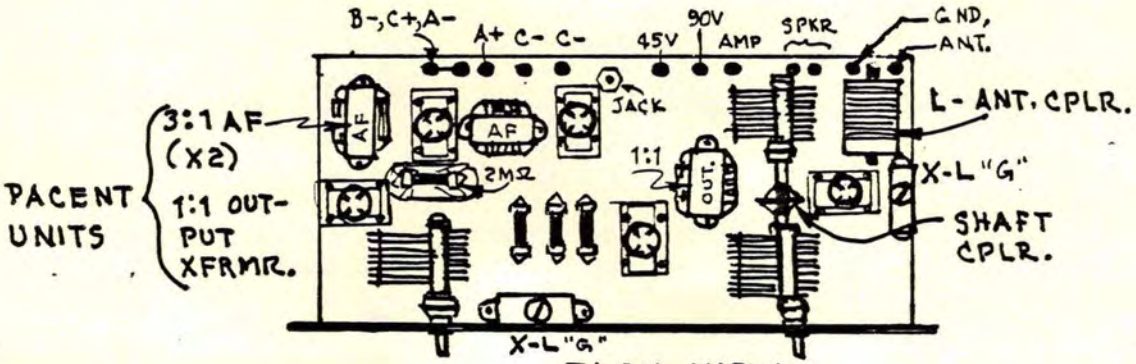

PLAN VIEW

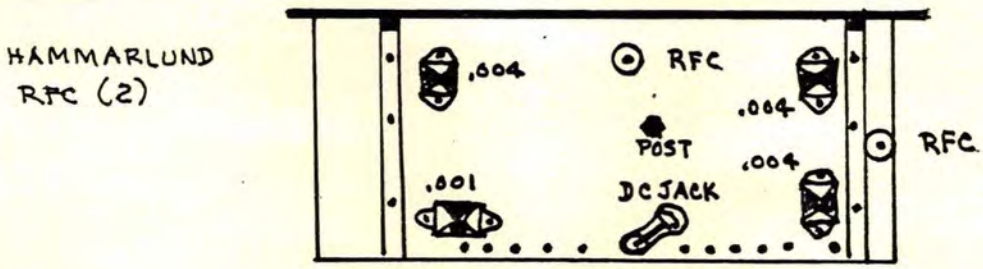

BOTTOM VIEW

LOFTIN-WHITE CONSTANT CPLD. RCVR.,1927; Sht. 3

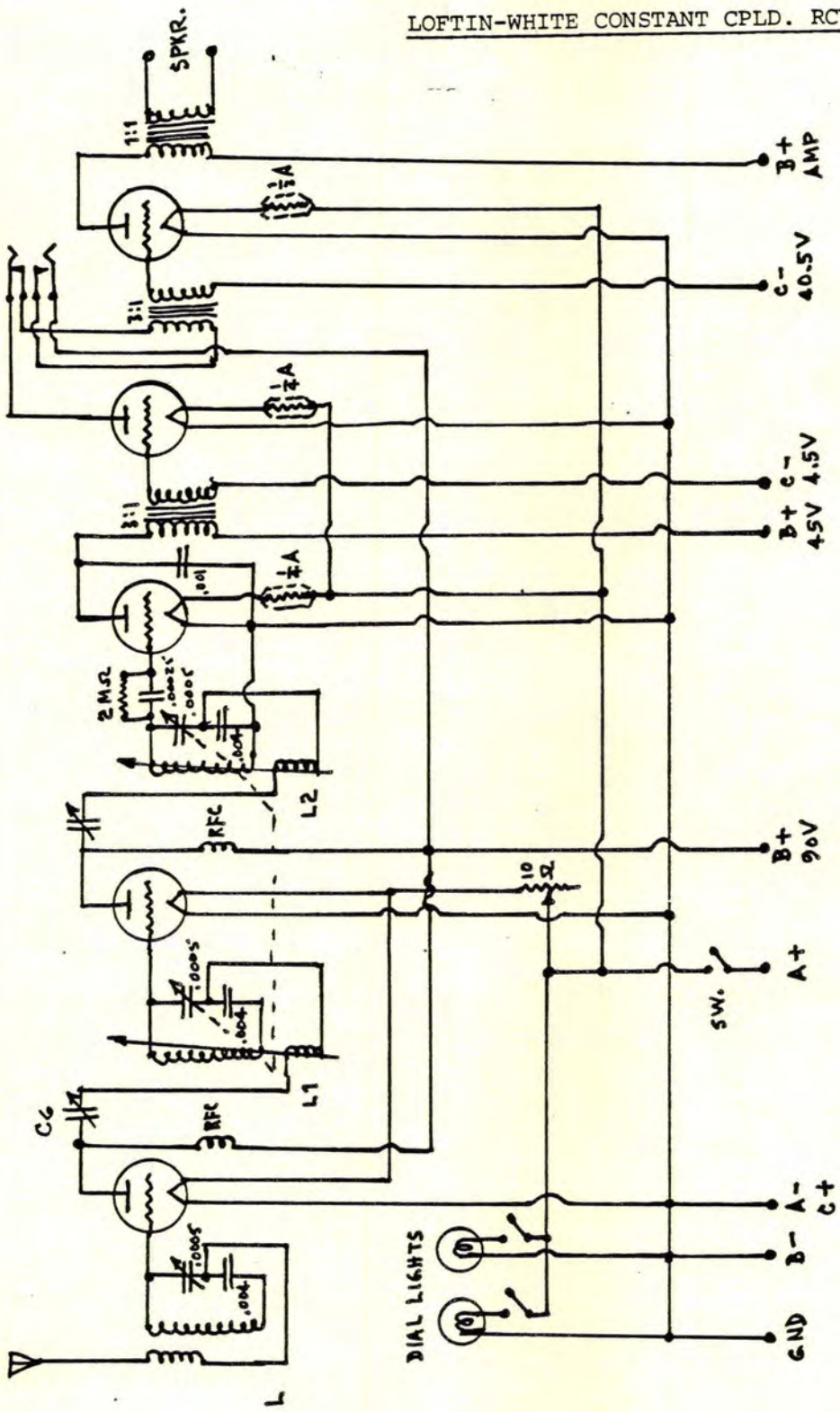

CONNECTICUT TELEPHONE COMPANY
1-TUBE REGENERATIVE RCVR., 1926

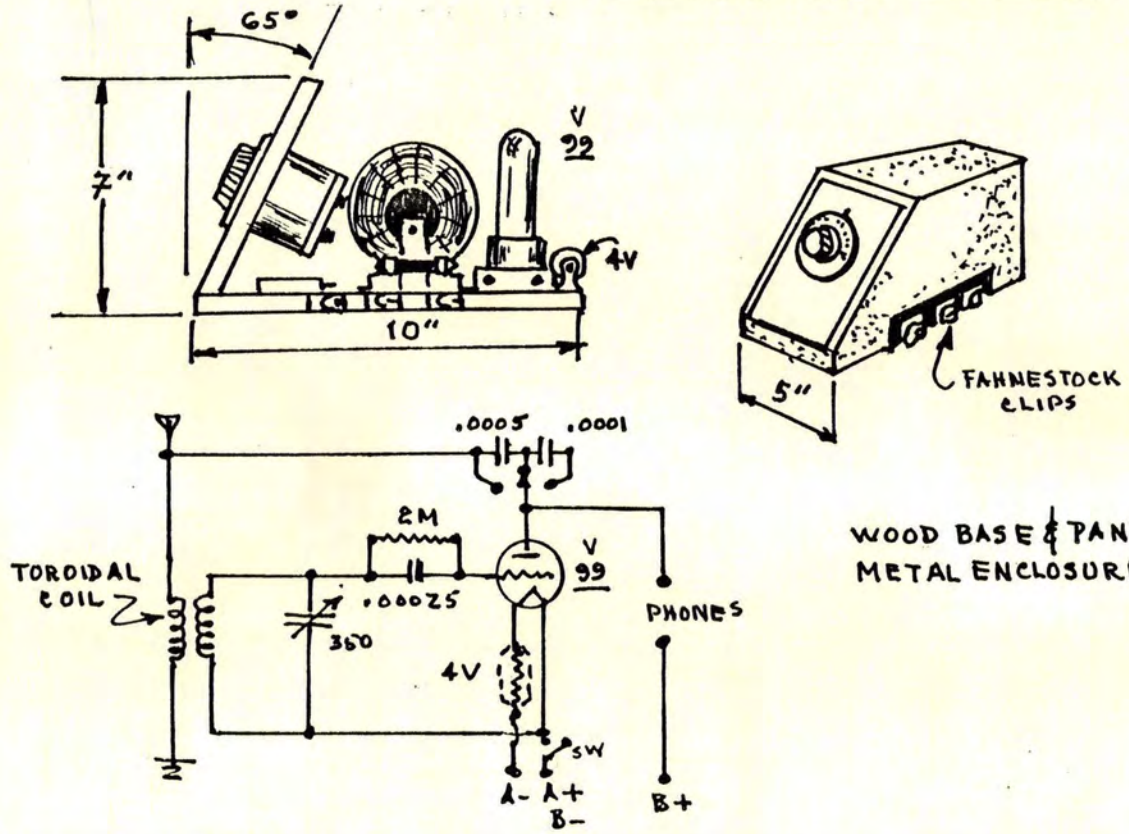

GOLDEN-LEUTZ "SUPER-PLIODYNE 9", 1925;Sht.1

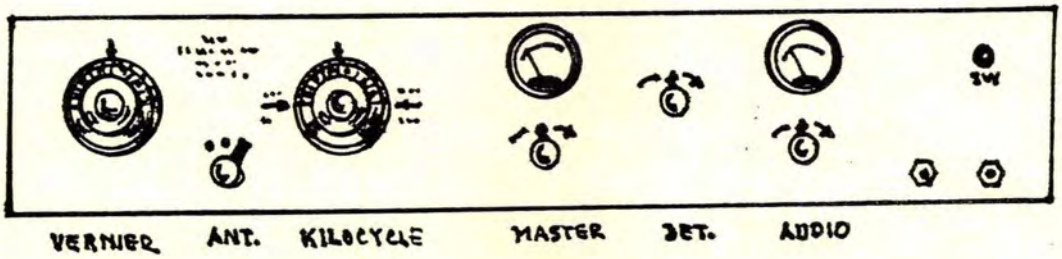

6 Stages TRF; 5 Neutralized. Detector.
2 Stages AF Amplification.
Panel = 40" x 8"; Chassis = 40" x 8" x ½".
Weight = 65 lbs.
Totally Shielded Cabinet.
All Tubes = 01A.
All Variable Condensers = .0005 MF, Geared Together(5).
RF PRI Coil = 25 Turns, #26 DCC, 1.75"Ø Form. } ALL
RF SEC Coil = 100 Turns, #26 DCC, 2"Ø Form. } ALL
PRI Inside SEC; .125" spacing on PRI.
N/R-C on Schematic (see Sht. 2) = Variable Resistors
20K - 100K; Neutralizing Condensers Were Midgets.
Original circuit designed in 1924.

GOLDEN-LEUTZ "PLIO-6 UNIVERSAL", 1926

Range: 23 to 2800 Meters.

GOLDEN-LEUTZ "SUPER PLIODYNE 9", 1925
(Sht. 2)

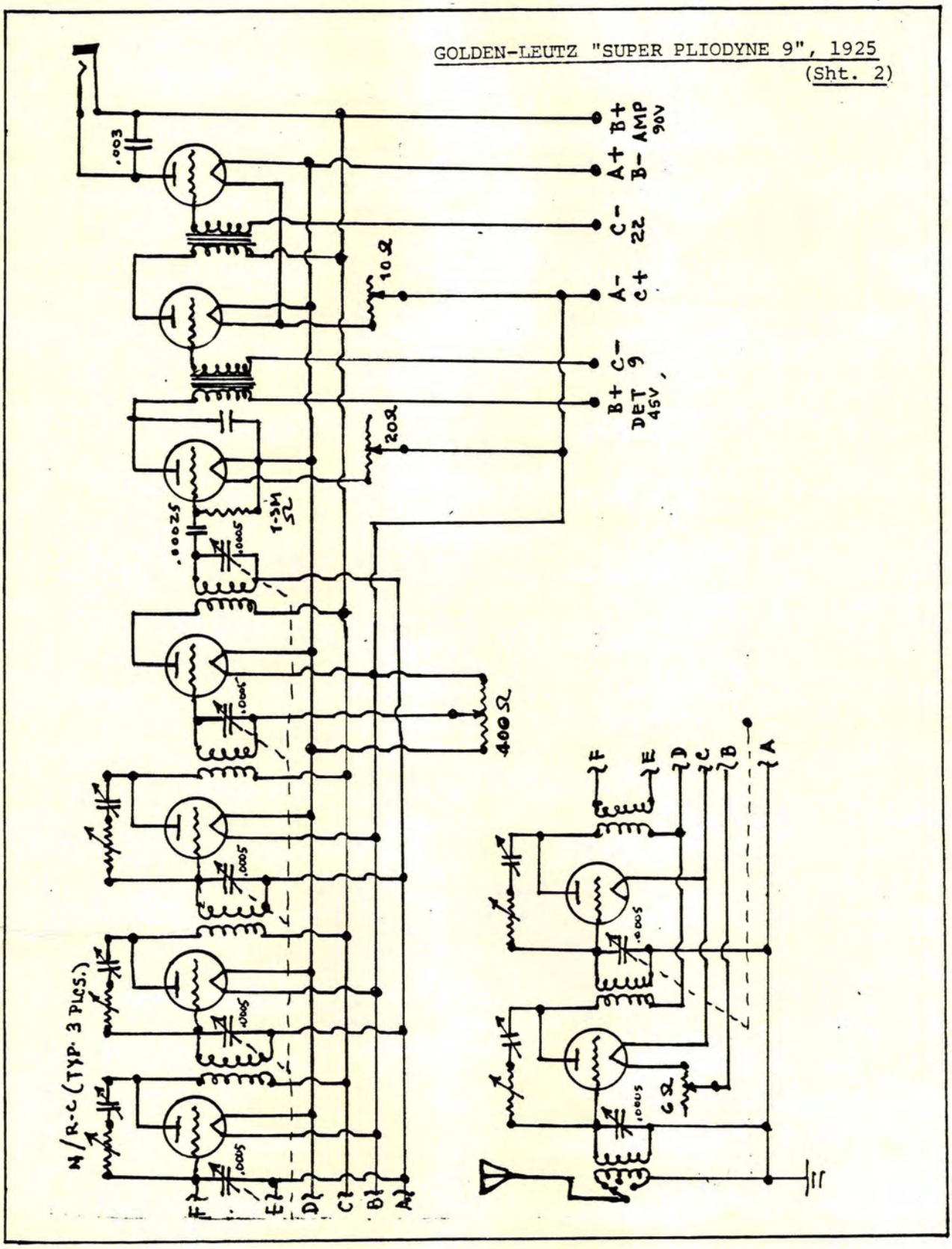

LEUTZ "SILVER GHOST" TRANSOCEANIC UNIVERSAL RECEIVER, 1928

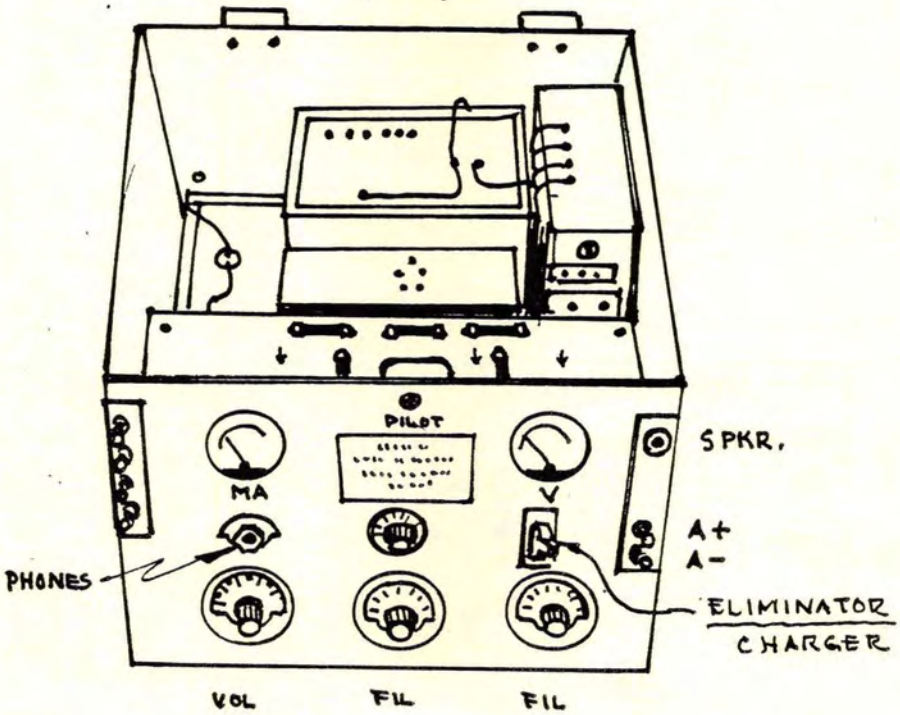

10 KC. Selectivity.

Long-Waves to 3,600 Meters.

Short-Waves to 35 Meters.

2-Scale Voltmeter reads A-B-C Voltages.

(Refer to Volume IV for Power Unit Schematic.)

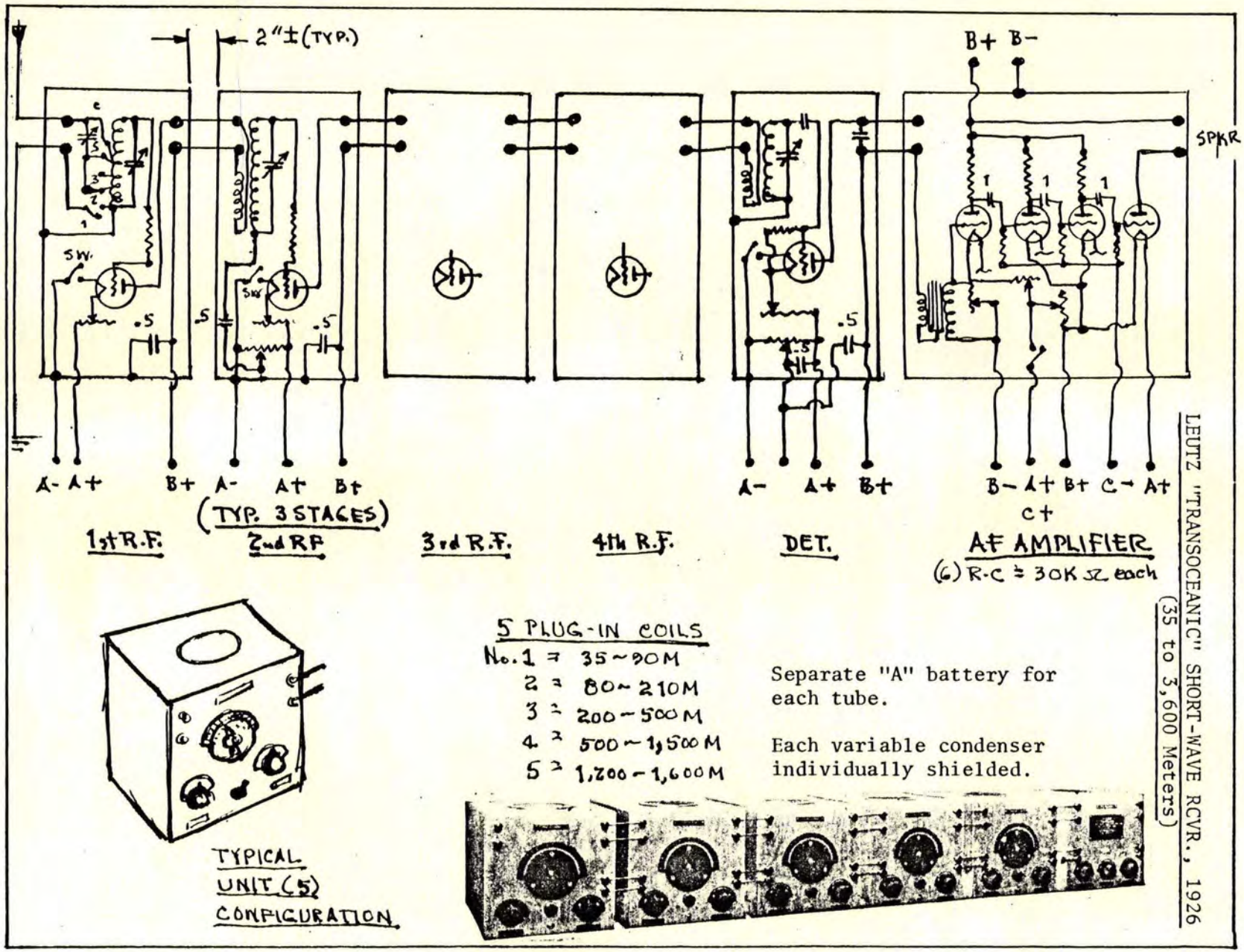

LEUTZ "TRANSOCEANIC" SHORT-WAVE RCVR., 1926 (35 to 3,600 Meters)

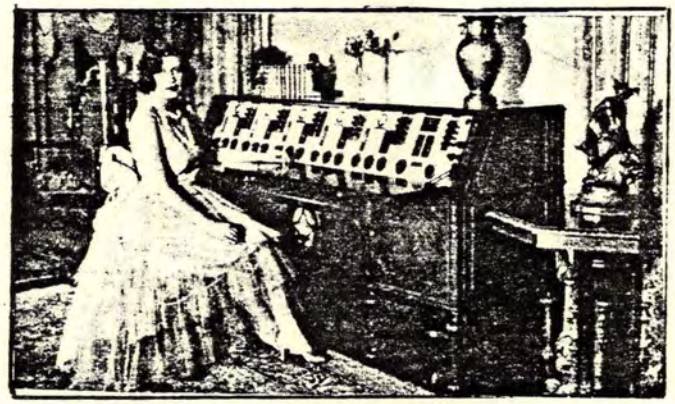

A rather esoteric installation of the Leutz "Silver Ghost", obviously in a wealthy man's home, but the young lady in the ball-room gown strikes an incongruous note. It would be difficult to imagine her running up and down, twirling knobs, while her young chums are waiting behind her to get on with a dance. This is, I feel, pushing the human side of Radio a bit too far, but the cut undoubtedly caught the eye of even casual readers of RADIO NEWS, in which the cut first appeared. Oddly enough, Leutz never used it in their sales literature.

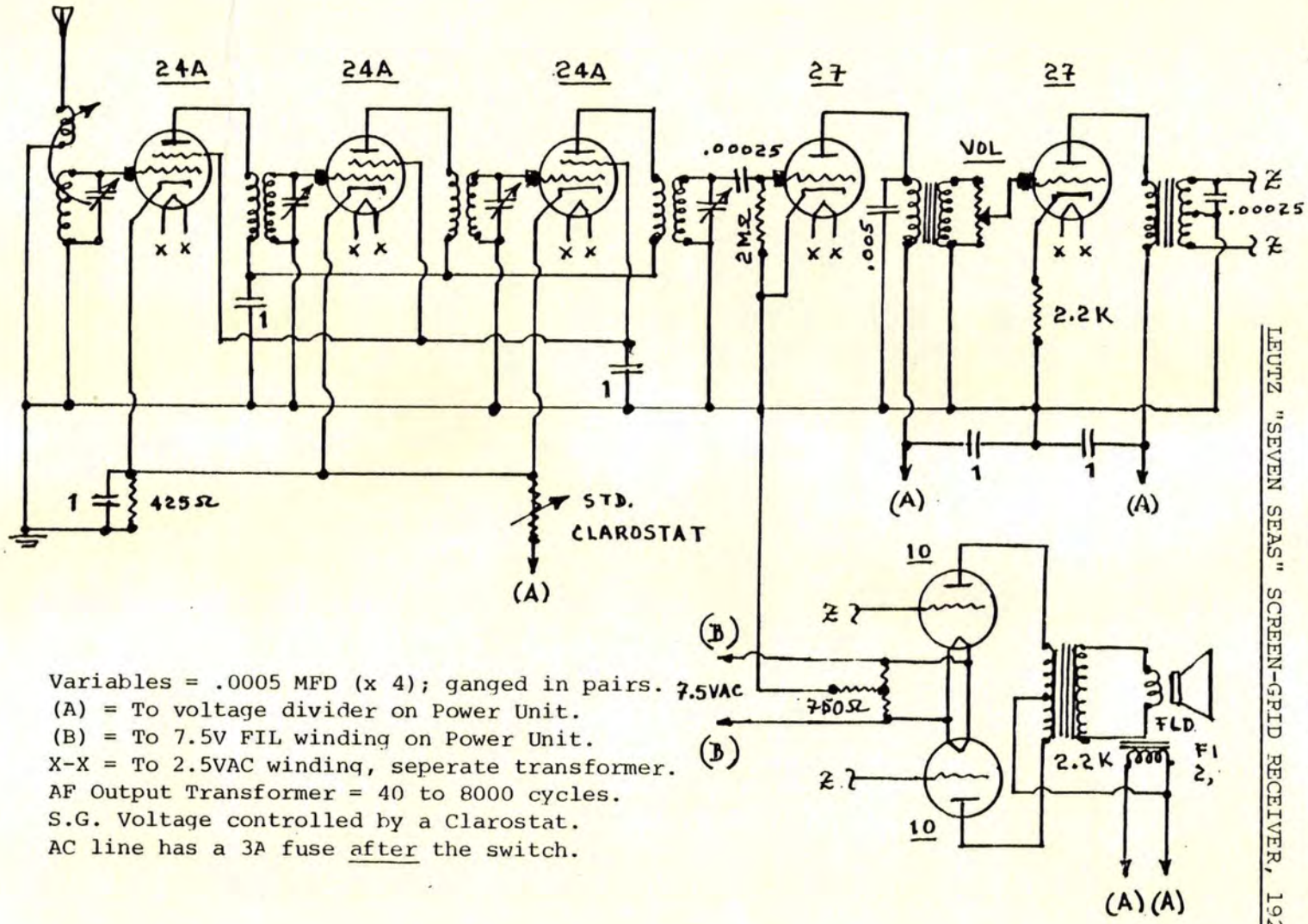

Variables = .0005 MFD (x 4); ganged in pairs.
(A) = To voltage divider on Power Unit.
(B) = To 7.5V FIL winding on Power Unit.
X-X = To 2.5VAC winding, seperate transformer.
AF Output Transformer = 40 to 8000 cycles.
S.G. Voltage controlled by a Clarostat.
AC line has a 3A fuse after the switch.

LEUTZ "SEVEN SEAS" SCREEN-GRID RECEIVER, 1929

THE LYNCH DECK, 1928
This item was sold as a pre-wired unit $12.

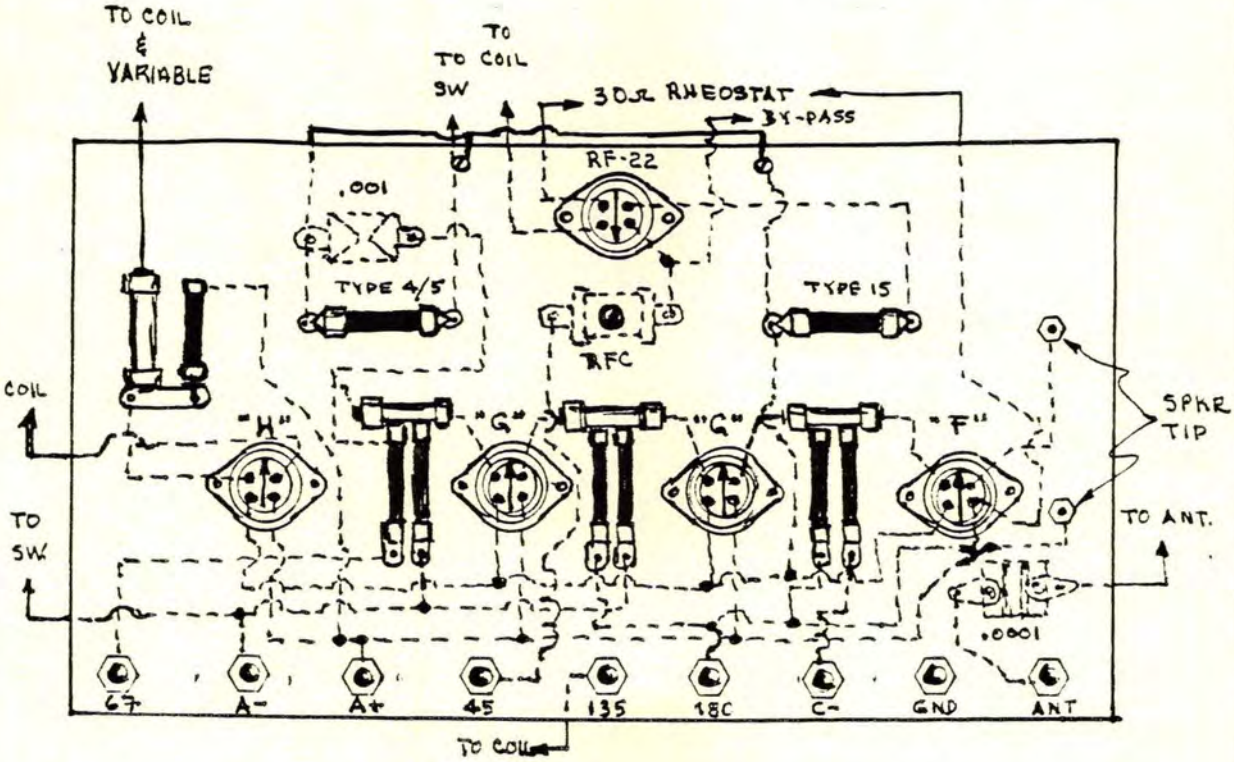

NOTES:

1. RFC = National 90 mH.
2. S-M Type 540 brackets supplied with unit.
3. Tubes recommended were Ce-Co.
4. Panel = 6" x 12" x ¼"; Micarta.
5. Total plate current = 15 mA, with 12A for AF.
6. Type numbers were Lynch "Equalizer" numbers, comparable to Amperite or Elkay for like tubes.

LYNCH DECK APPLICATION No. 1, 1927

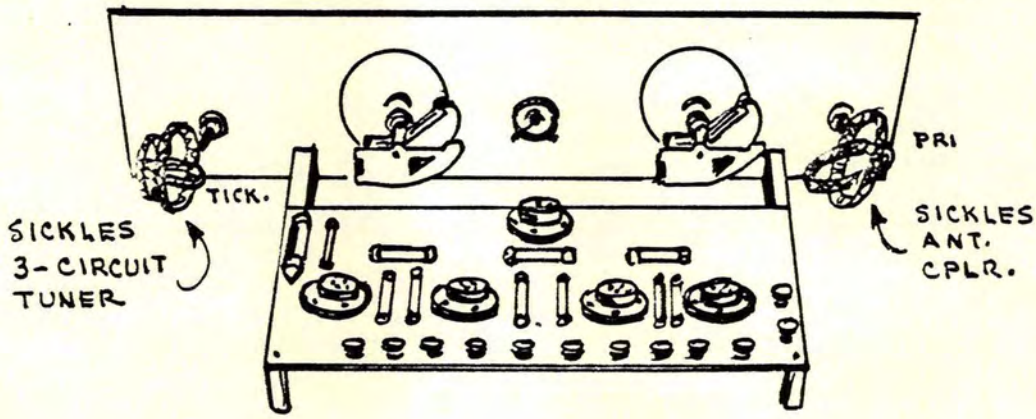

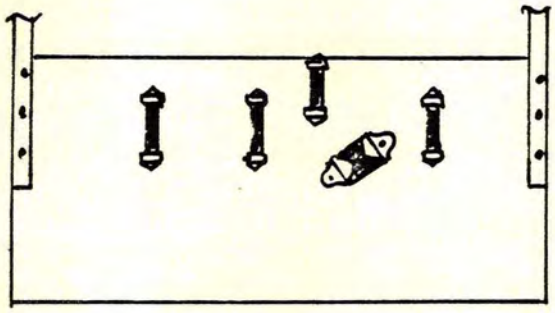

BOTTOM VIEW

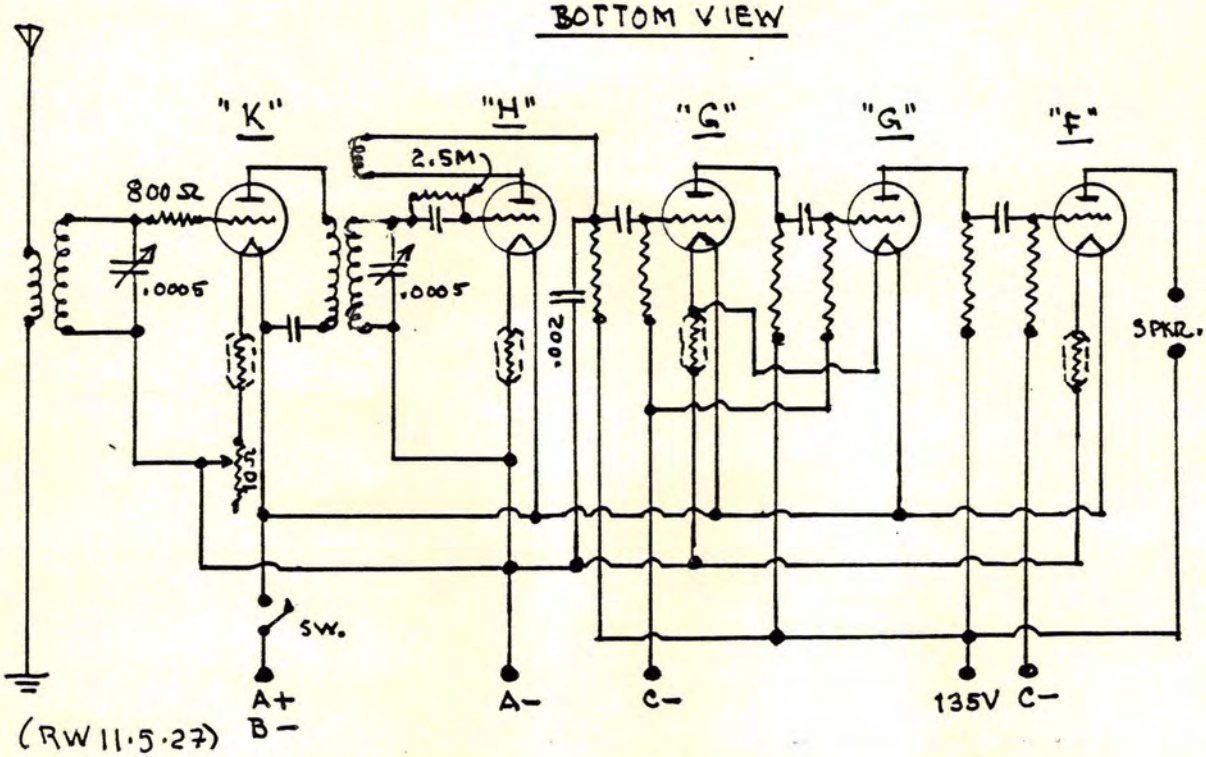

(RW 11·5·27)

LYNCH DECK APPLICATION #3; Sht. 3

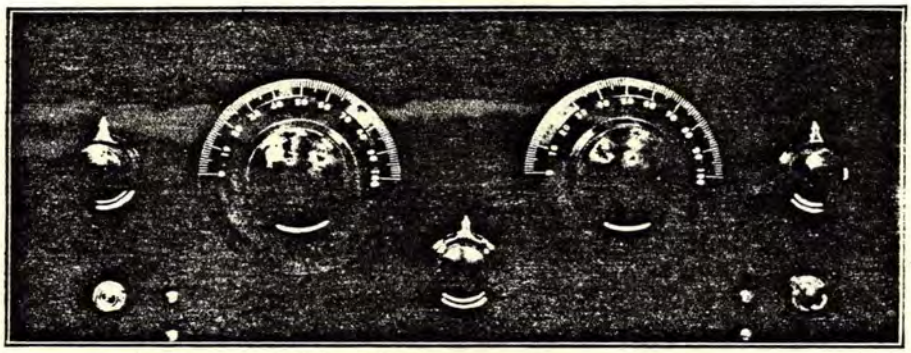

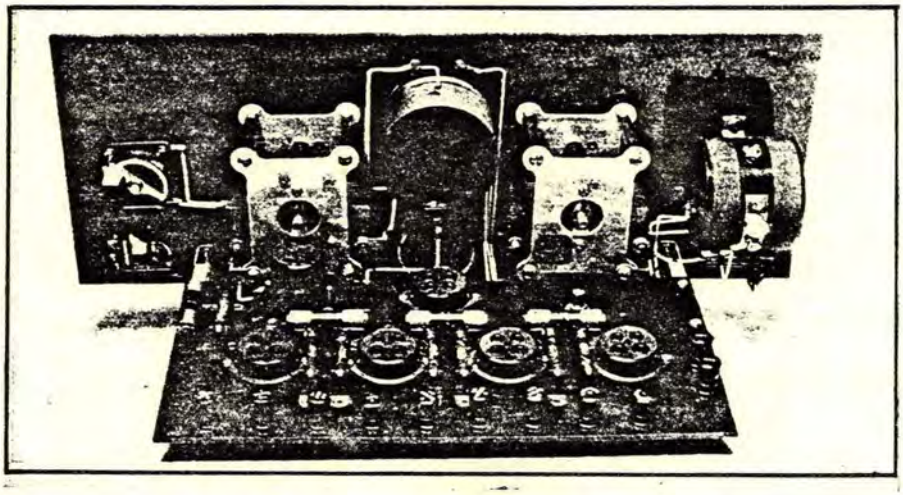

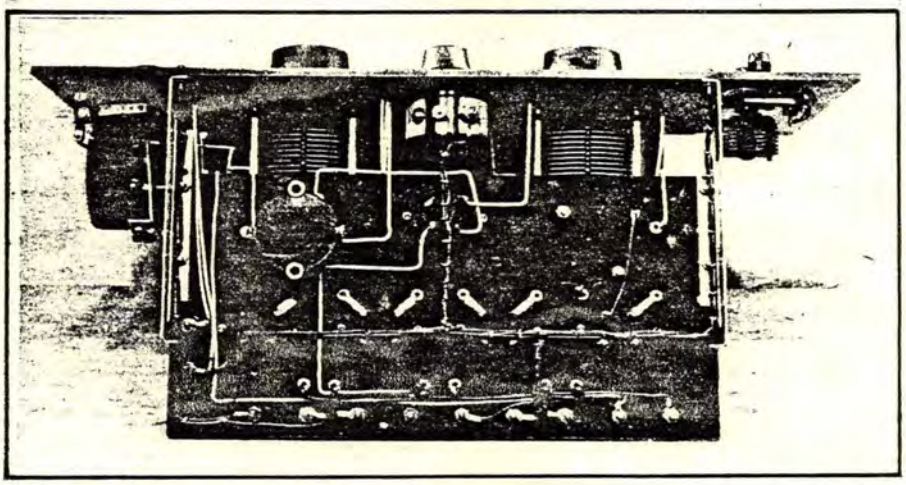

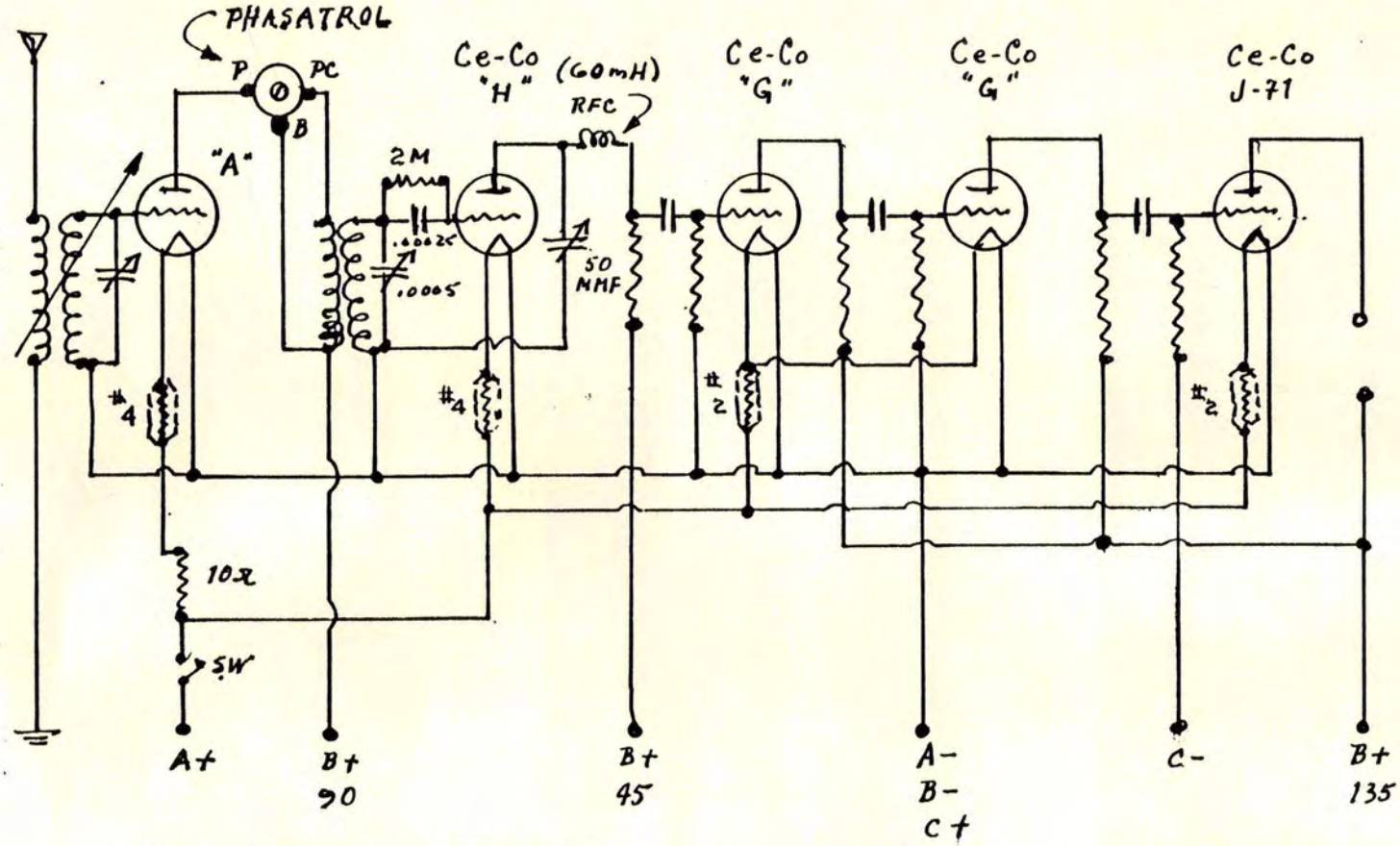

GEN. RADIO VARIOCOUPLER.
(2) " " .0005MFD VARIABLES.
" " RF XFRMR.
LYNCH "Equalizers", 2 EA. #2, #4 (AMPERITES or ELKAY JUST AS GOOD.)
SEE SKETCH of LYNCH DECK FOR VALUES NOT SHOWN.
PANEL = 7"x18"
(2) NAT'L. "Velvet Vernier" DIALS.

LYNCH DECK APPLICATION #3; Sht. 4

LYNCH NATIONAL FIVE, 1927

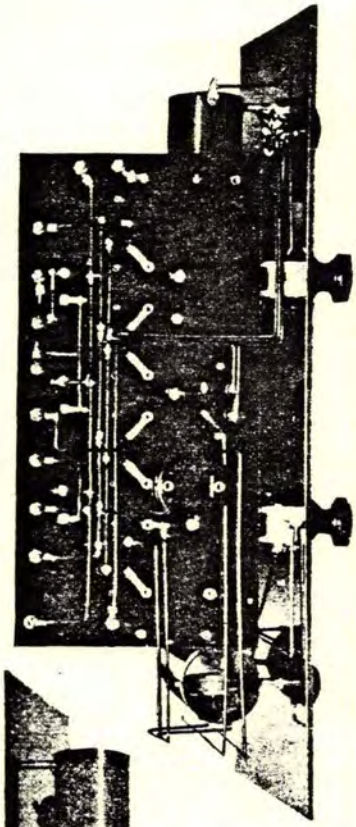

BOTTOM VIEW

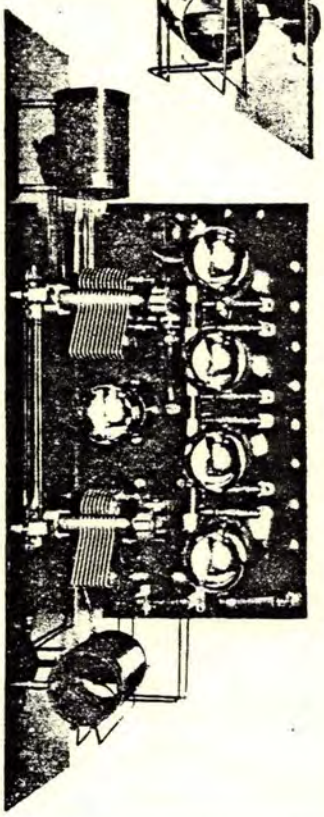

PLAN VIEW

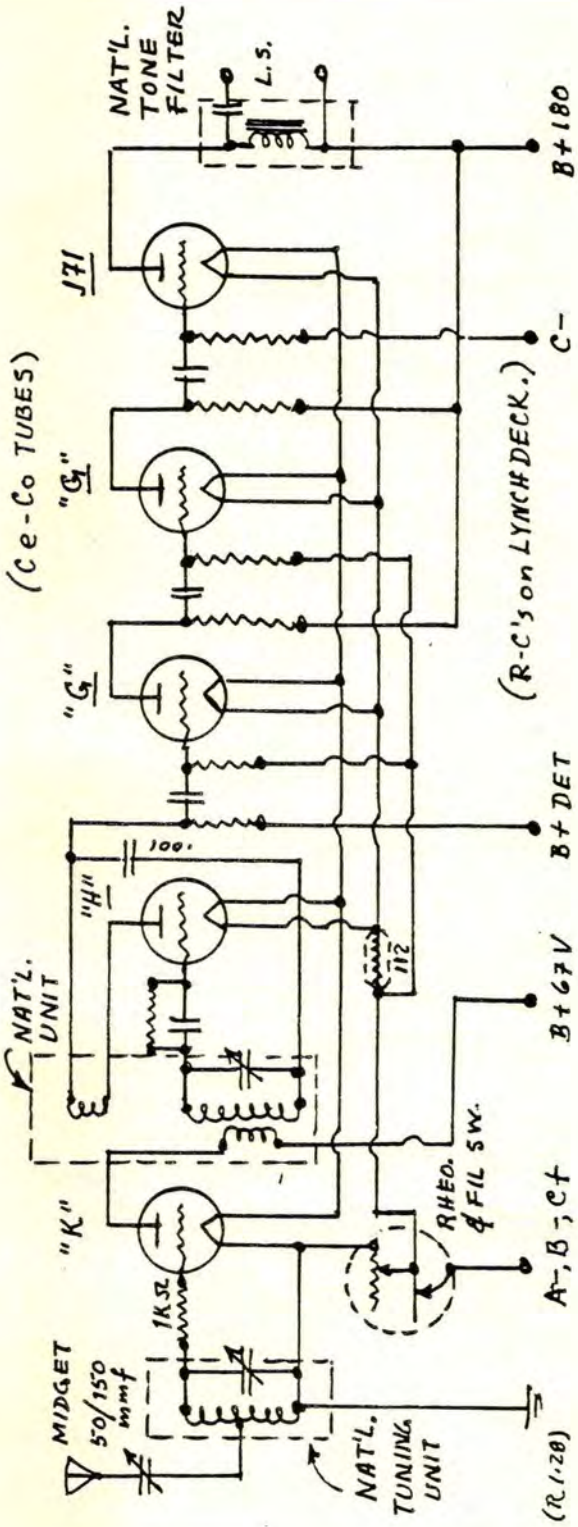

LYNCH DECK APPLICATION w/ AERO COILS

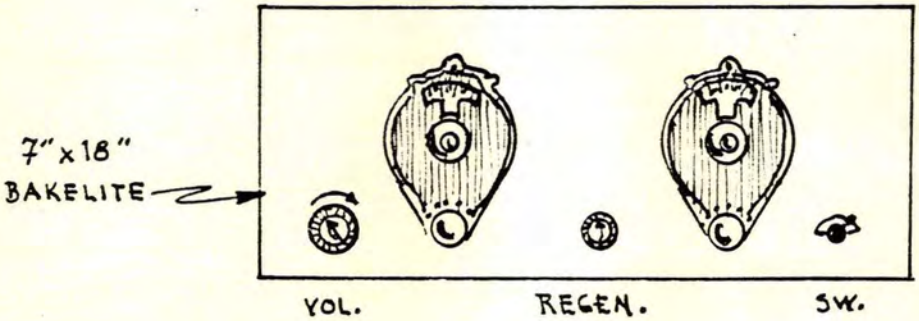

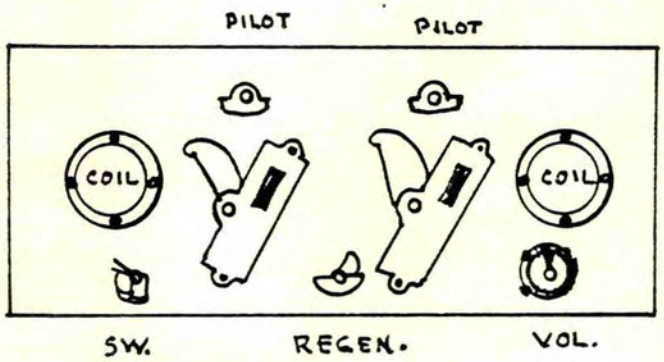

RERE of PANEL

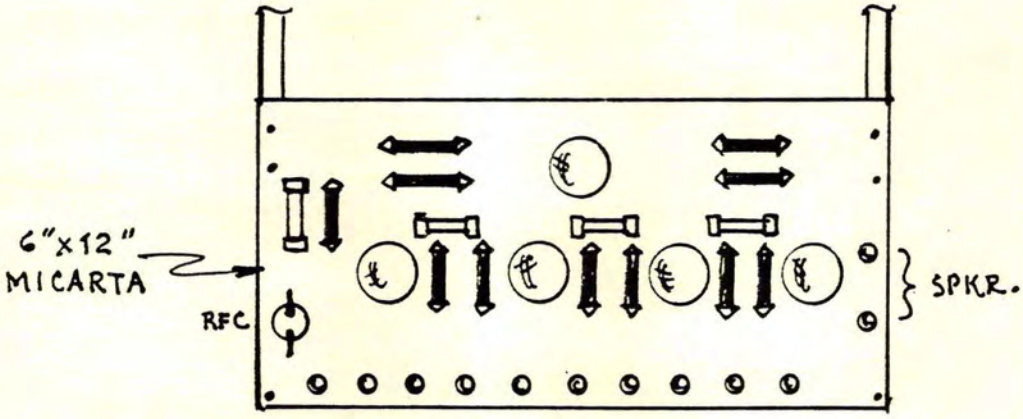

DECK #2 LAYOUT

LYNCH "UNIVERSAL" RCVR., 1926

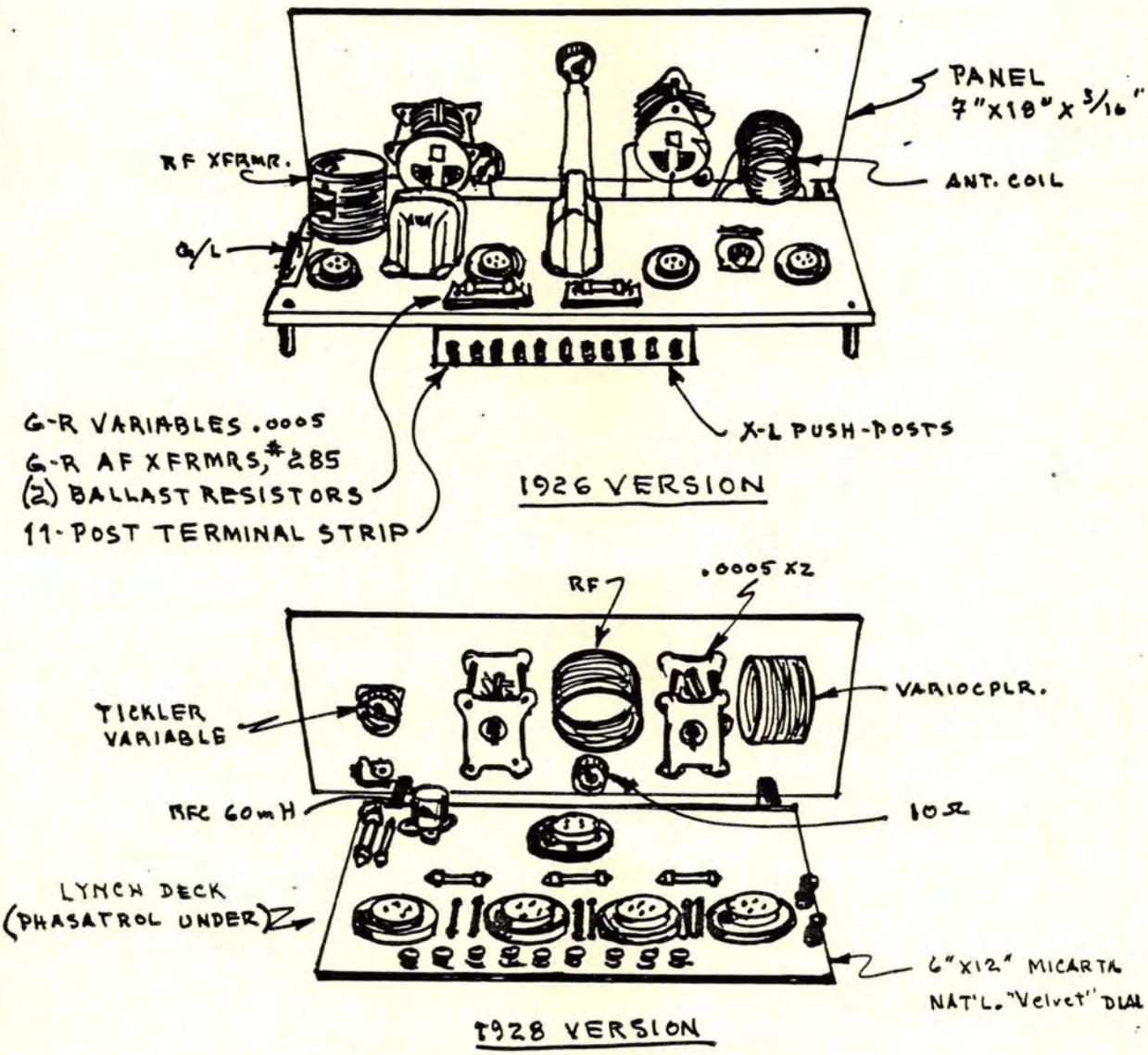

Refer to Sht. 2 for schematic. Circuitry of both versions the same, with minor alterations.

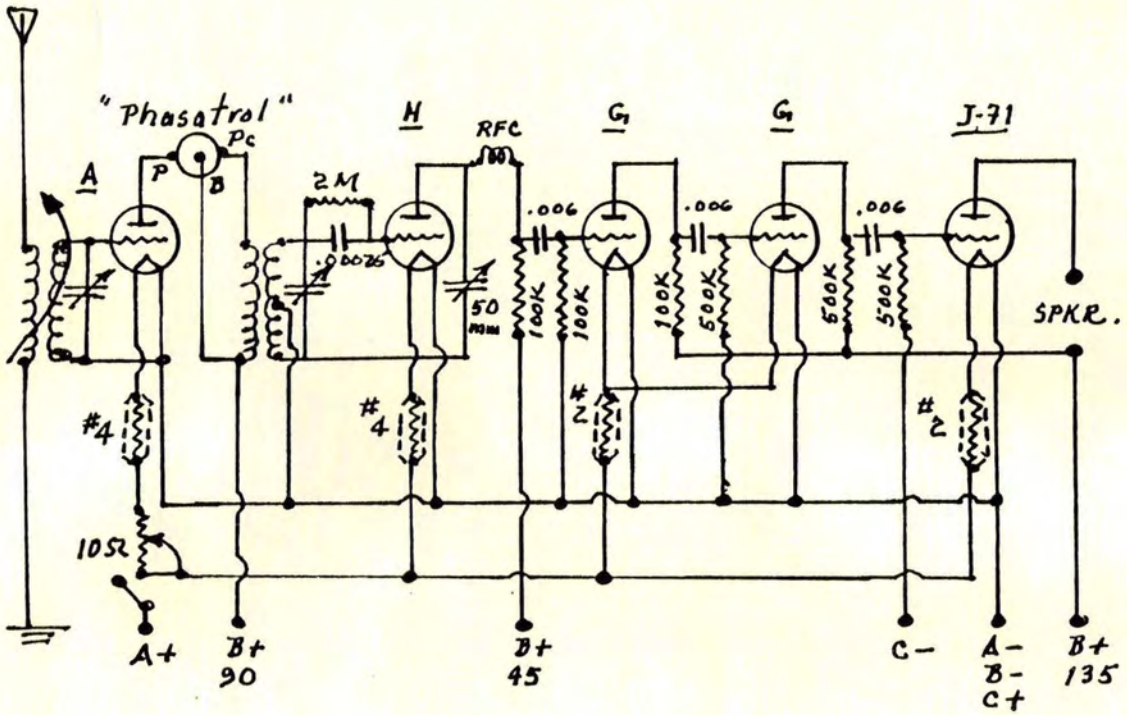

Tube numbers are Ce-Co tube designations.

A filter should be used with the 71 tube.

LYNCH "UNIVERSAL" RCVR.,1926;Sht.2

NOTES

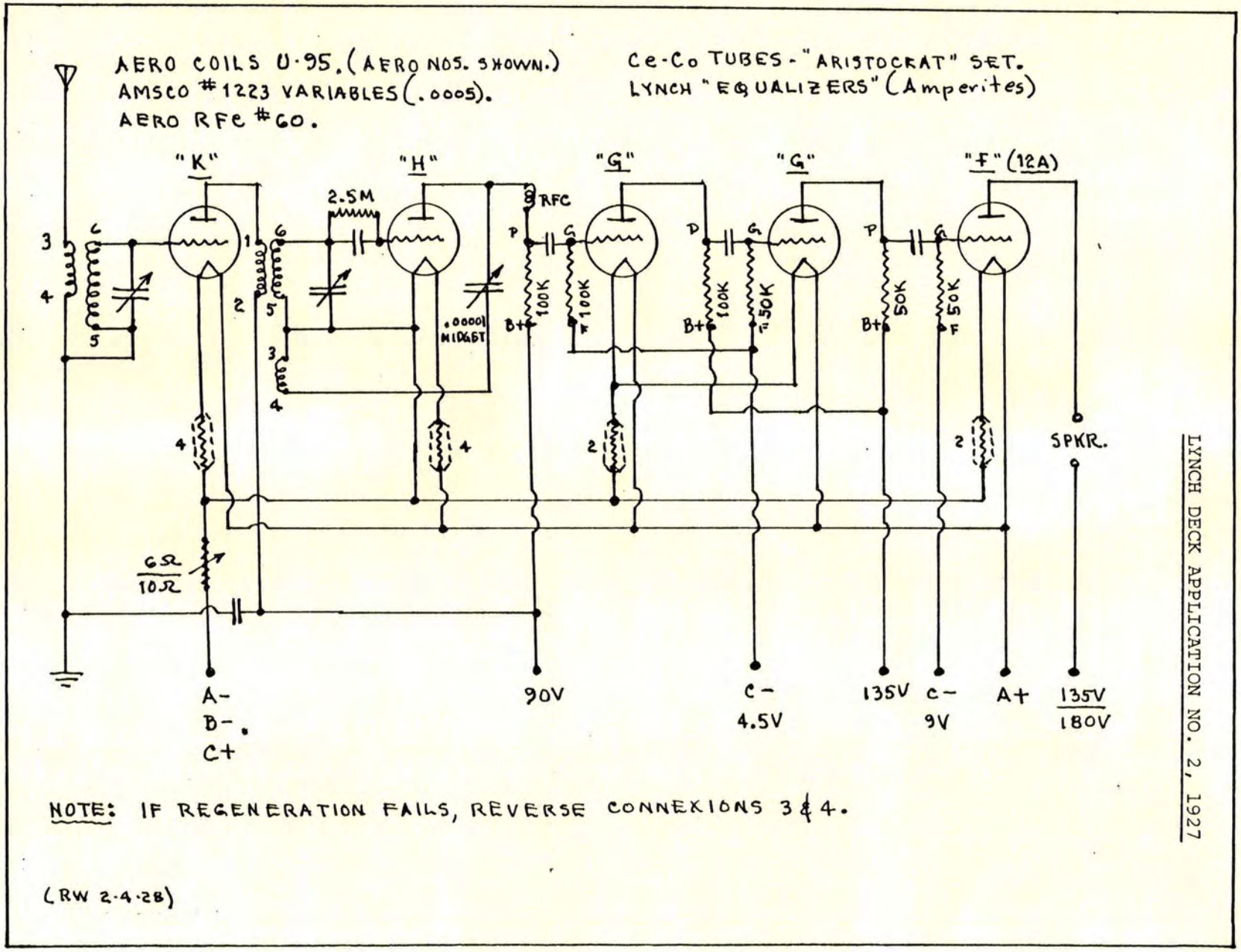

LYNCH DECK APPLICATION NO. 2, 1927

MADISON-MOORE SUPER-HETERODYNE; 1926
200 to 600 Meters Sht. 1

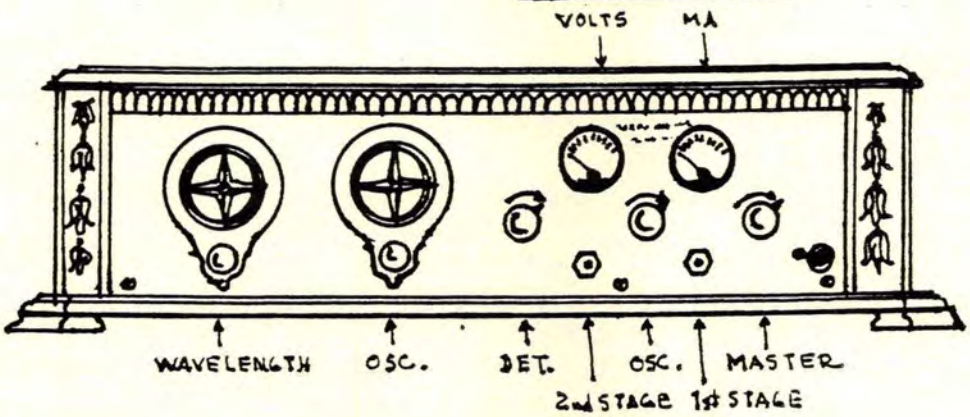

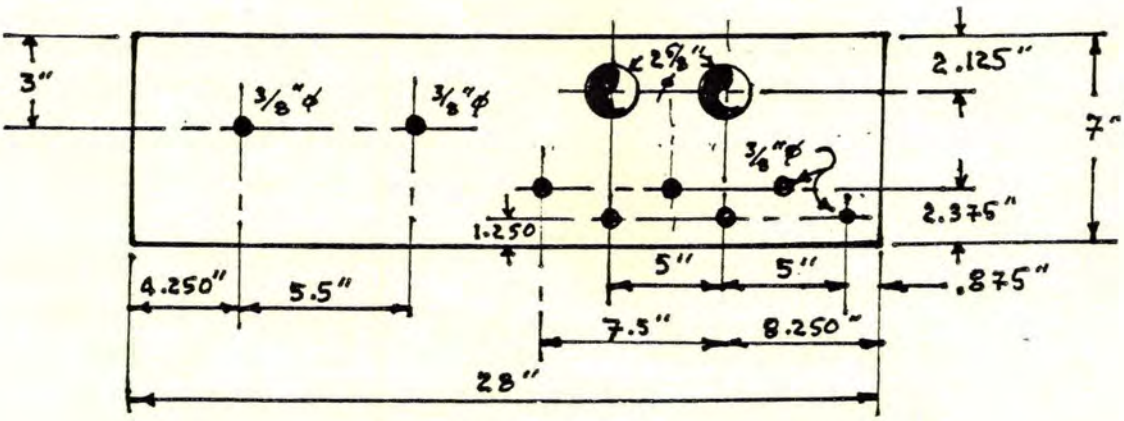

PANEL LAYOUT

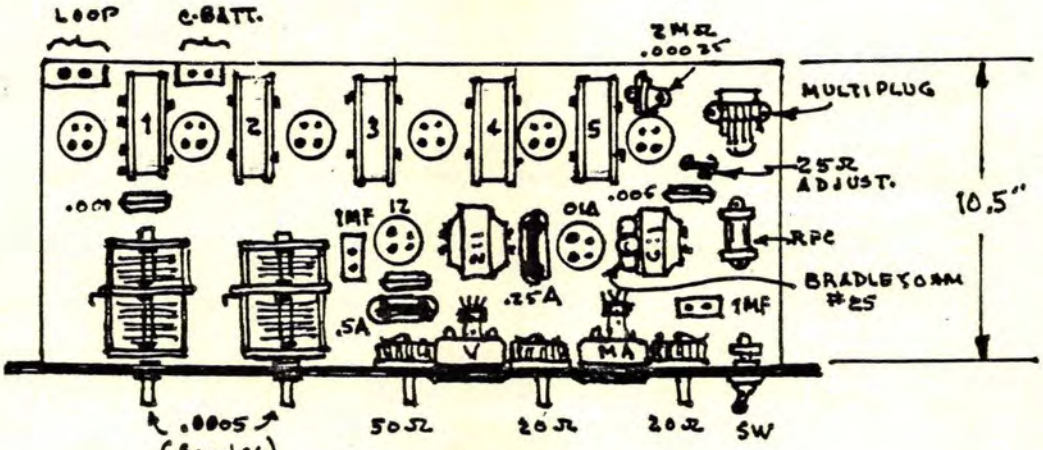

PLAN VIEW

MADISON-MOORE SUPER-HETERODYNE, 1926;Sht.2

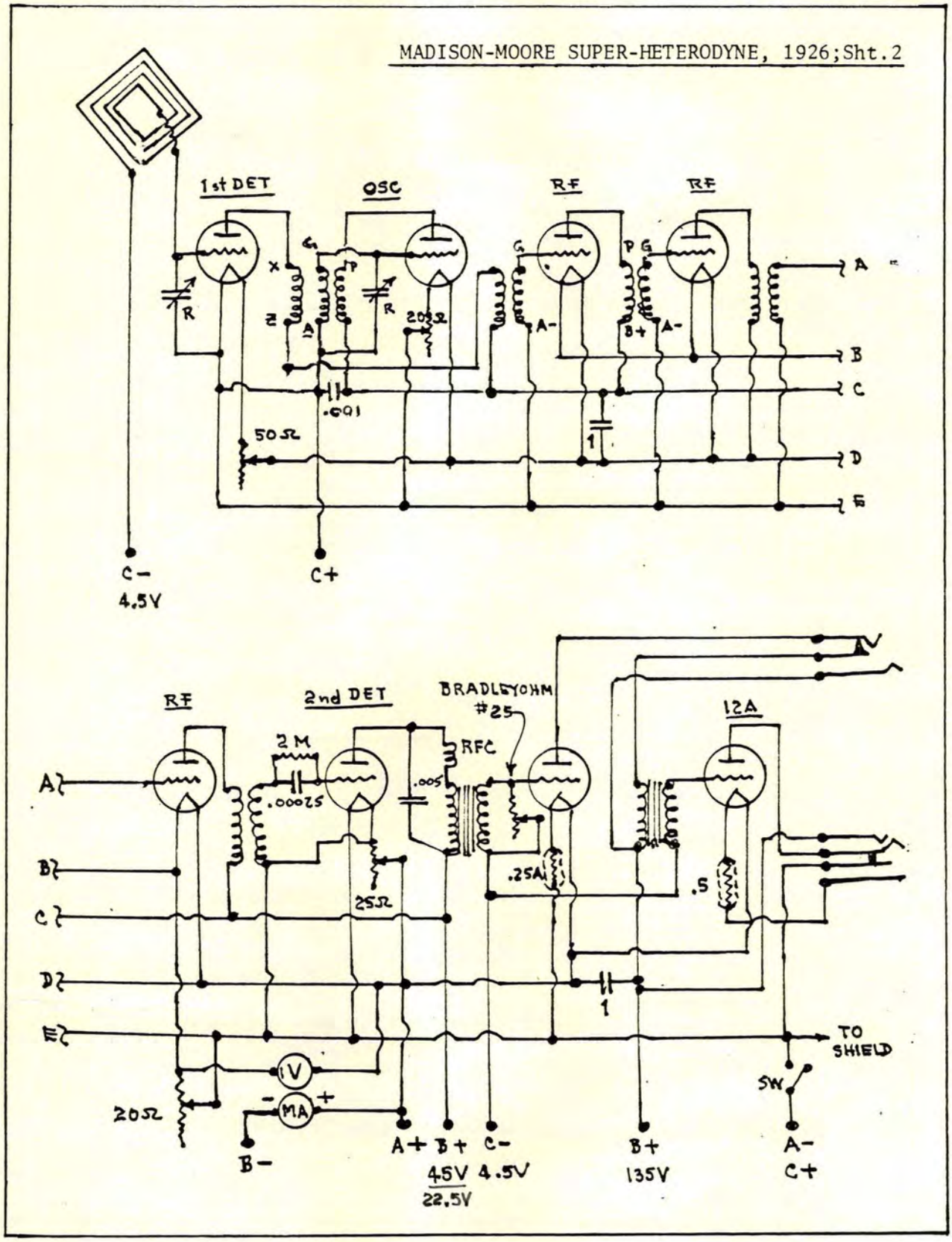

MADISON-MOORE SUPER-HET RECEIVER:Sht. 3

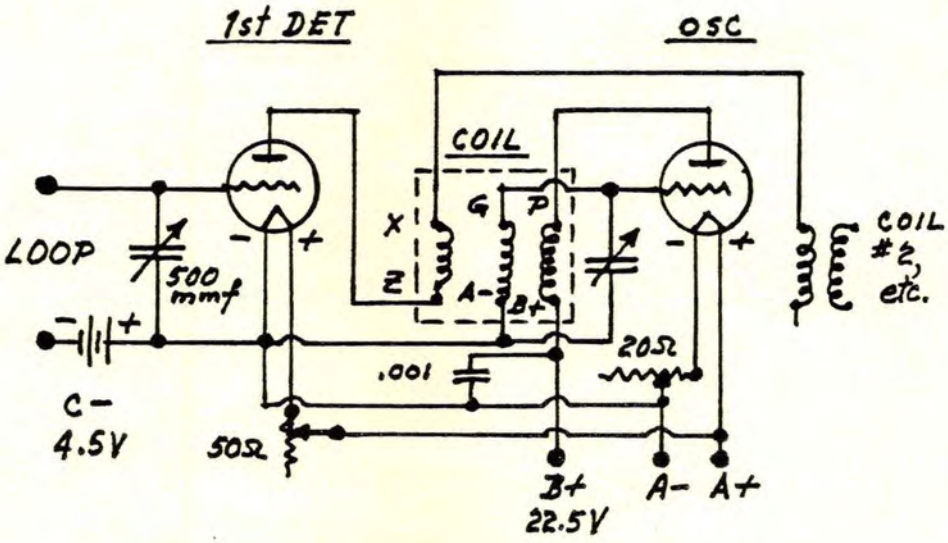

OSCILLATOR CIRCUITRY SIMPLIFIED

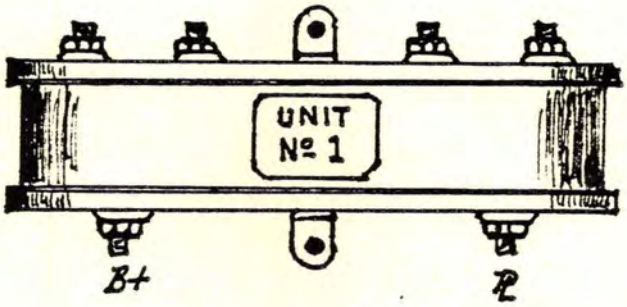

PLAN VIEW

NOTES FOR SHEET 1

1. All panel holes 13/32", unless noted.
2. Loop and Speaker Strip = 2½" x .75" x .186".
3. C-Battery Strip = 2¼" x .75" x .186.
4. M-M name was in gold Gothic script.

(CB Spr.-26)

MADISON-MOORE SUPER HETERODYNE, 1926
(Sht. 4)

GENERAL NOTES:

To tune lower than 200 meters, remove the connecting wire from the two variable condensers. This results in a capacity of 250 mmfd.

1. AF transformers = General Radio #285.

2. Variable condensers = .0005 mfd.

3. Voltmeter = Weston 0-8V, Type #301.

4. Ammeter = Weston 0-50 mA, Type 301.

5. RFC = Samson #51 (85 mH).

6. (2) Pacent "Microvern" dials.

7. Bradleyohm #25.

MADISON-MOORE " ONE-SPOT" RECEIVER
(1926) (Sht. 1)

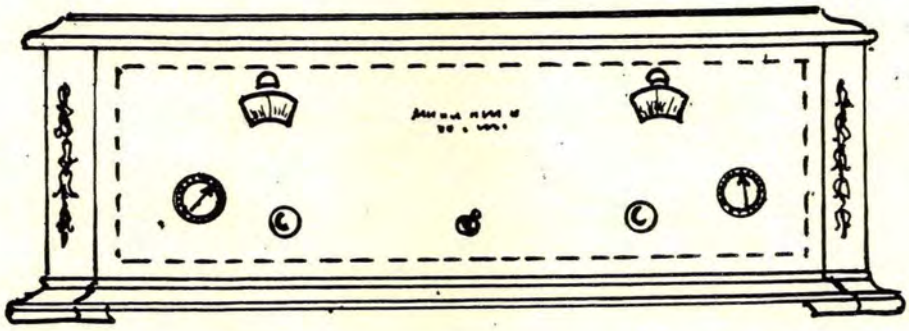

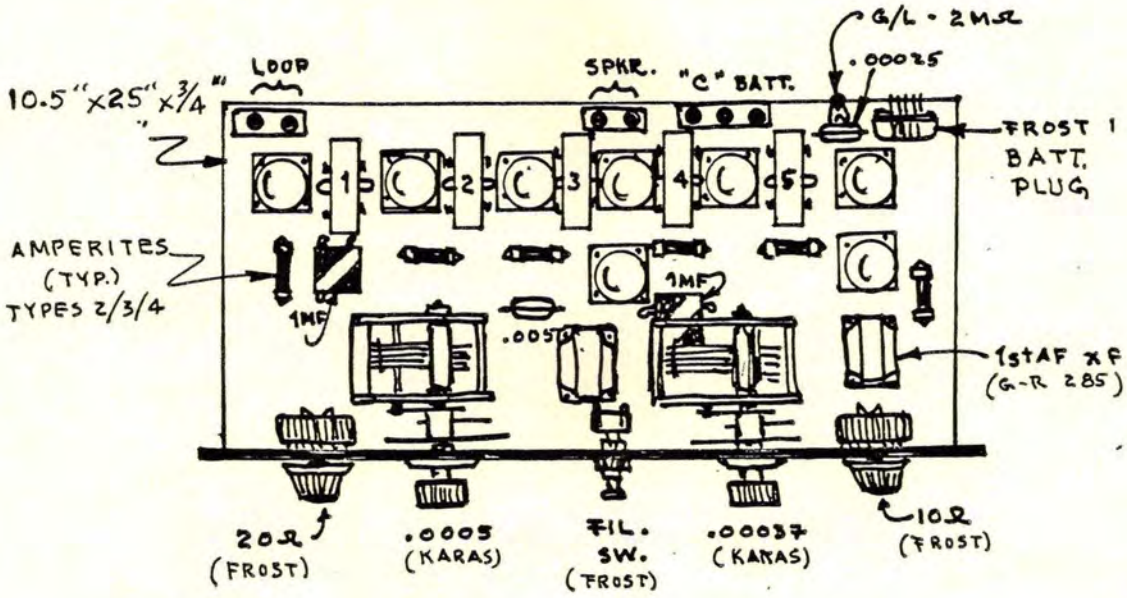

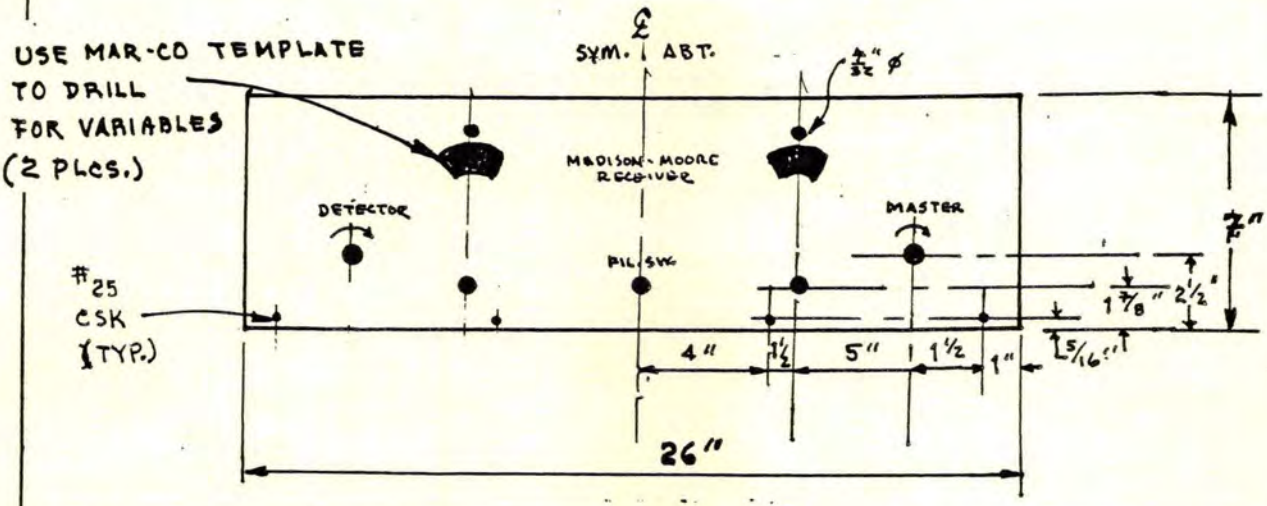

MADISON-MOORE "ONE-SPOT" RECEIVER, 1926;Sht.2

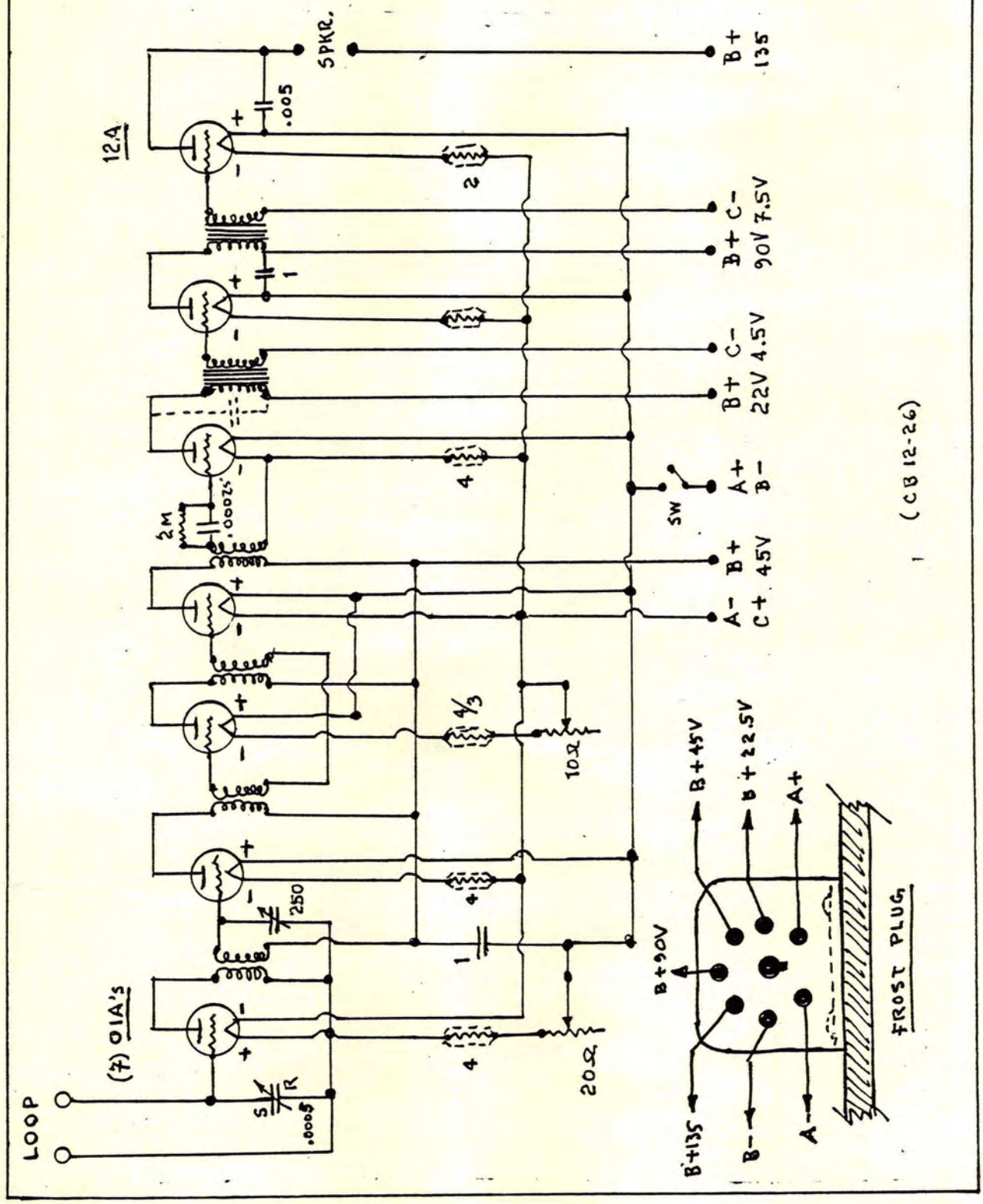

MADISON-MOORE "INTERNATIONAL ONE-SPOT" RCVR.
(1927) (Sht. 1)

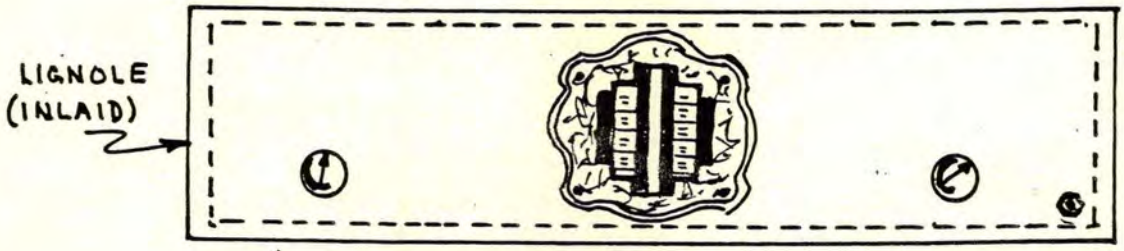

1927 PANEL

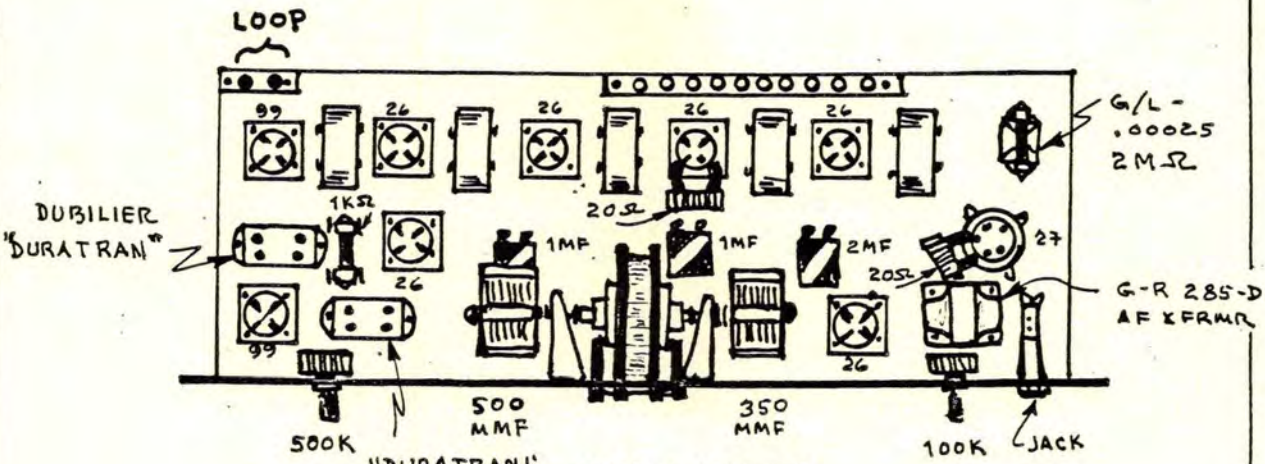

1927 LAYOUT

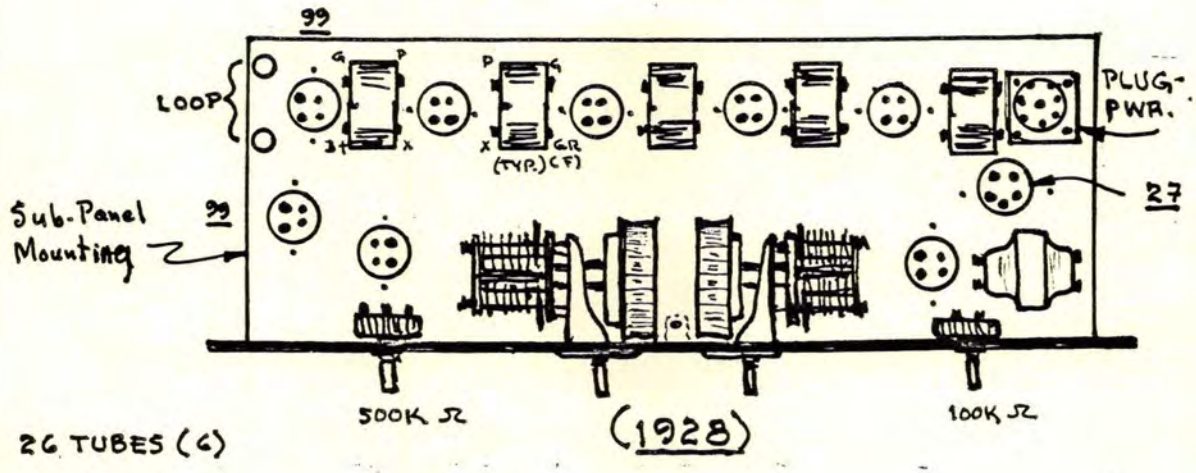

(1928)

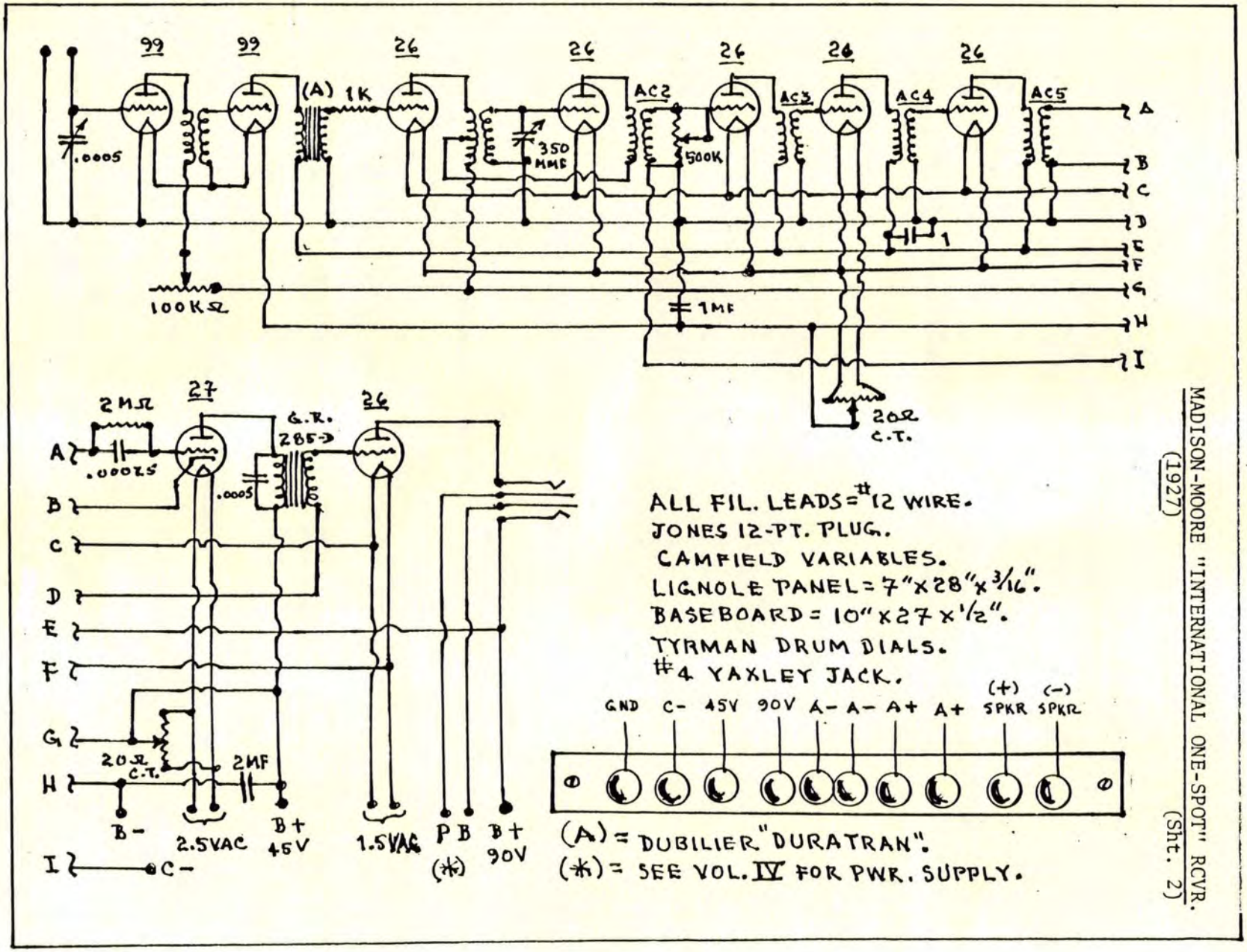

MADISON-MOORE "INTERNATIONAL ONE-SPOT" RCVR. (1927) (Sht. 2)

MAGNAFORMER 8-9 RECEIVER
(1927 Version) (Sht. 1)

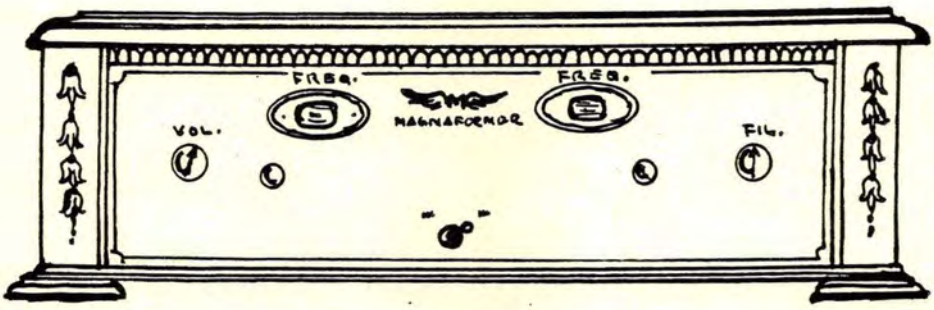

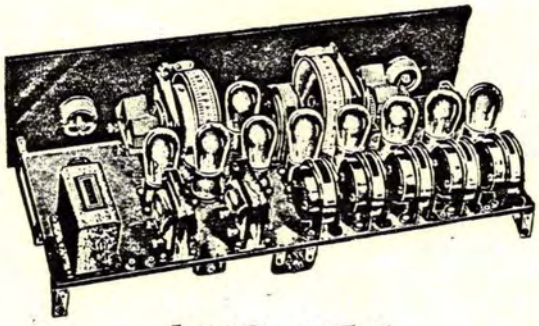

REAR VIEW

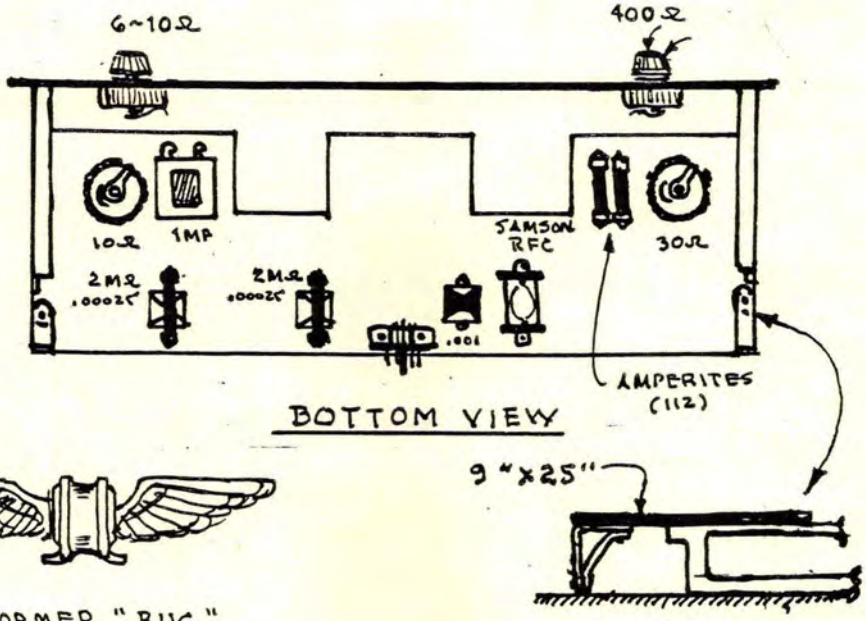

BOTTOM VIEW

MAGNAFORMER "BUG"

MAGNAFORMER 8-9 RECEIVER
1927 Version Sht. 2

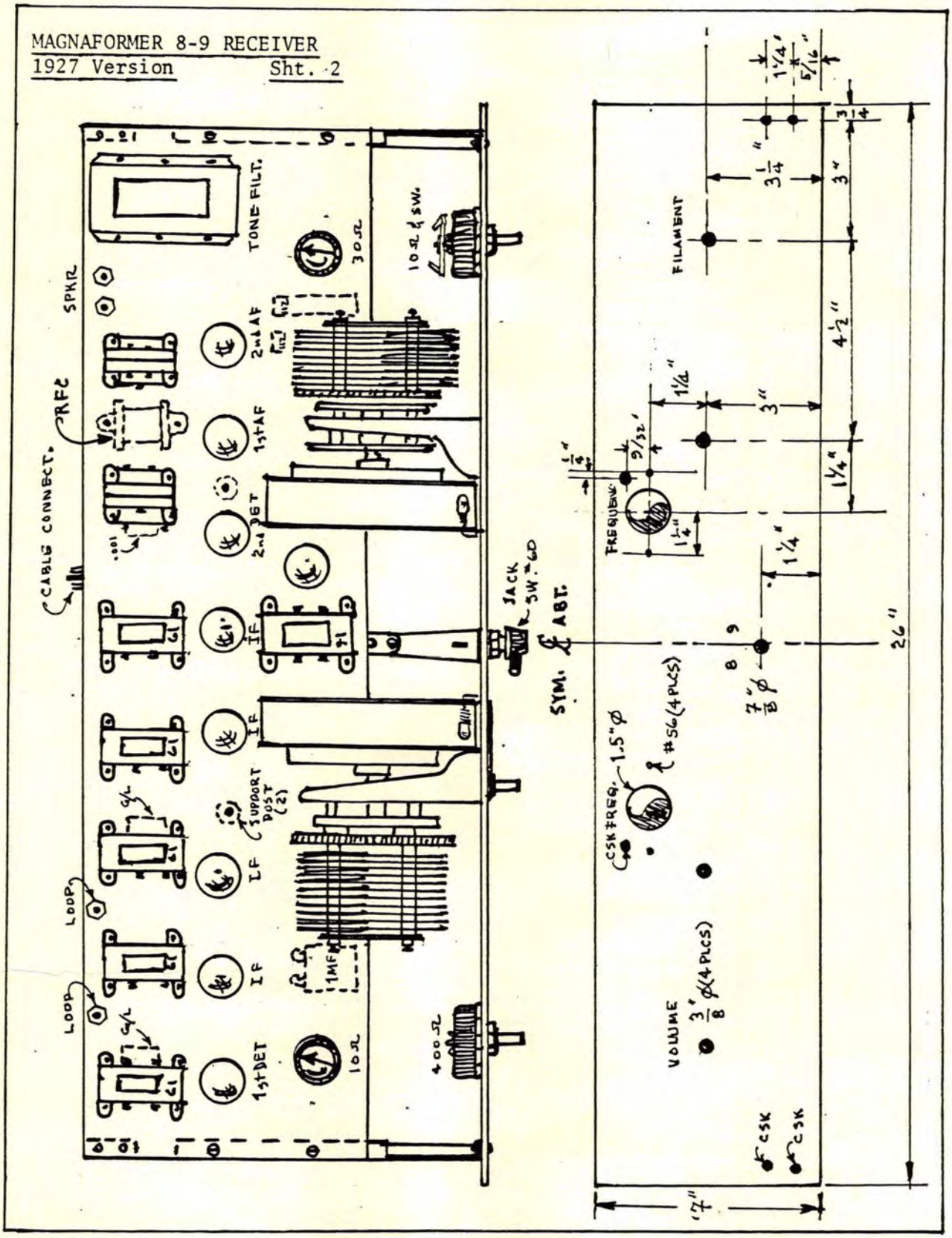

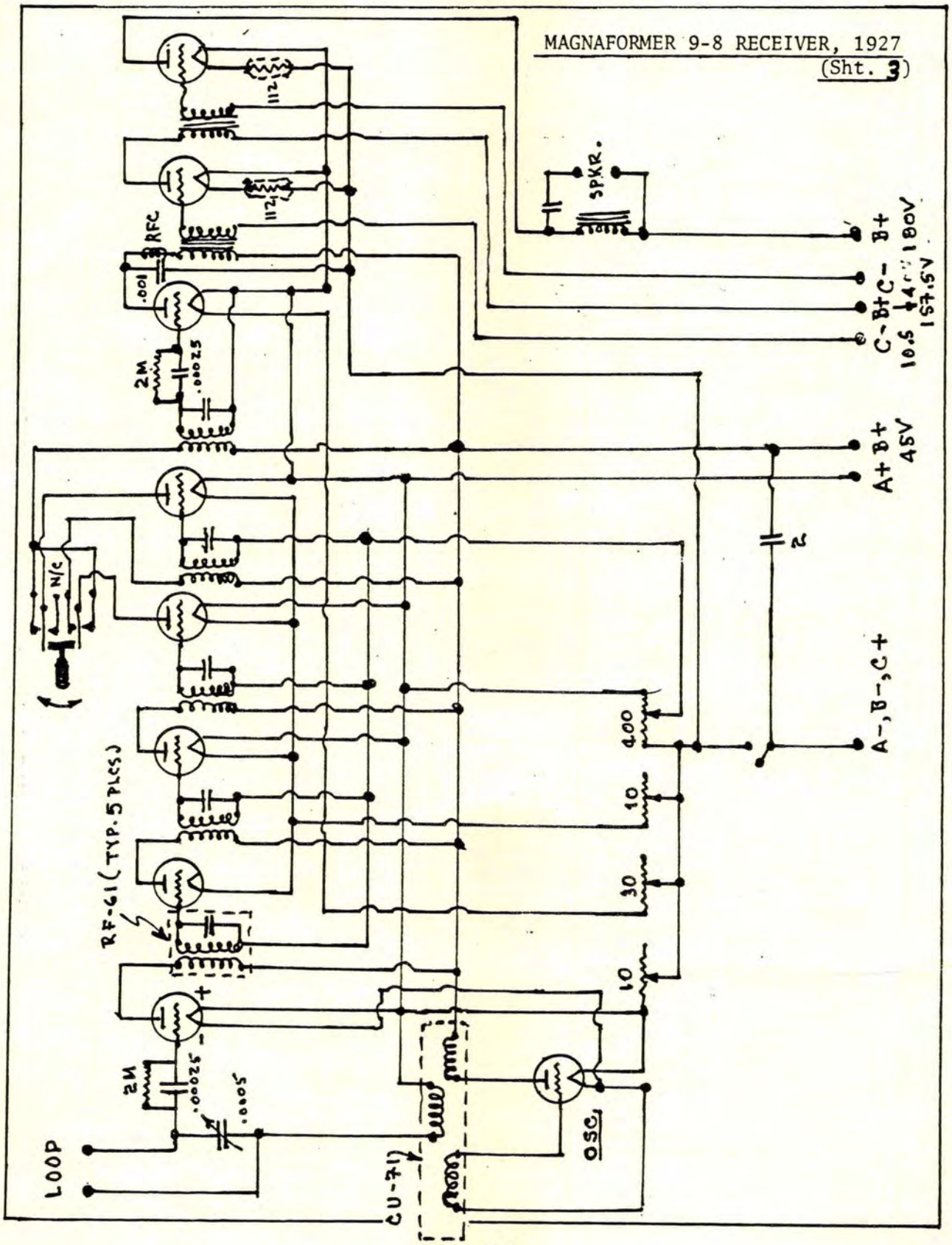
MAGNAFORMER 9-8 RECEIVER, 1927
(Sht. 3)
SPKR.
RFC
.001
2M
.00025
N/C
RF-61 (TYP. 5 PLCS.)
2M
.00025
.0005
LOOP
CU-71
OSC.
400
10
30
10
2
A+ B+
45V
C- B+ C-
B+
A-, B-, C+

MAGNAFORMER 9-8 RECEIVER, 1927
(Sht. 4)

Sealing Disc (8)

Fixed Variable (4)

(6) Metal Shield Enclosure

(1) Bakelite Spool

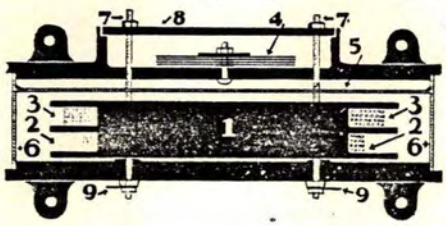

SEC Metal Shield (5)

SEC (3)

PRI (2)

TYPICAL MAGNAFORMER

Soldering Lugs (9)

Each coil is exactly the same - i.e., 69.73 KC, or 4,300 meters. Lugs are conventionally marked as F,G,P,B+. All coils carry the same designation, except the "Unicoupler" - which is designated CU-71; all others = RF-61.

NOTES FOR BUILDING

1. (2) Remler drum dials.
2. (2) Remler #639 Variables, .0005 mfd.
3. DPDT switch for cutting AF stage in or out.
4. RFC = 125mH.
5. Yaxley gold-plated jack-switch.
6. (4) tip jacks.
7. 12-ft. Round buss-wire, #14.
8. 25-ft. Flexible hook-up wire.

MAGNAFORMER 8-9 RECEIVER, 1927; Sht. 5
(Variant)

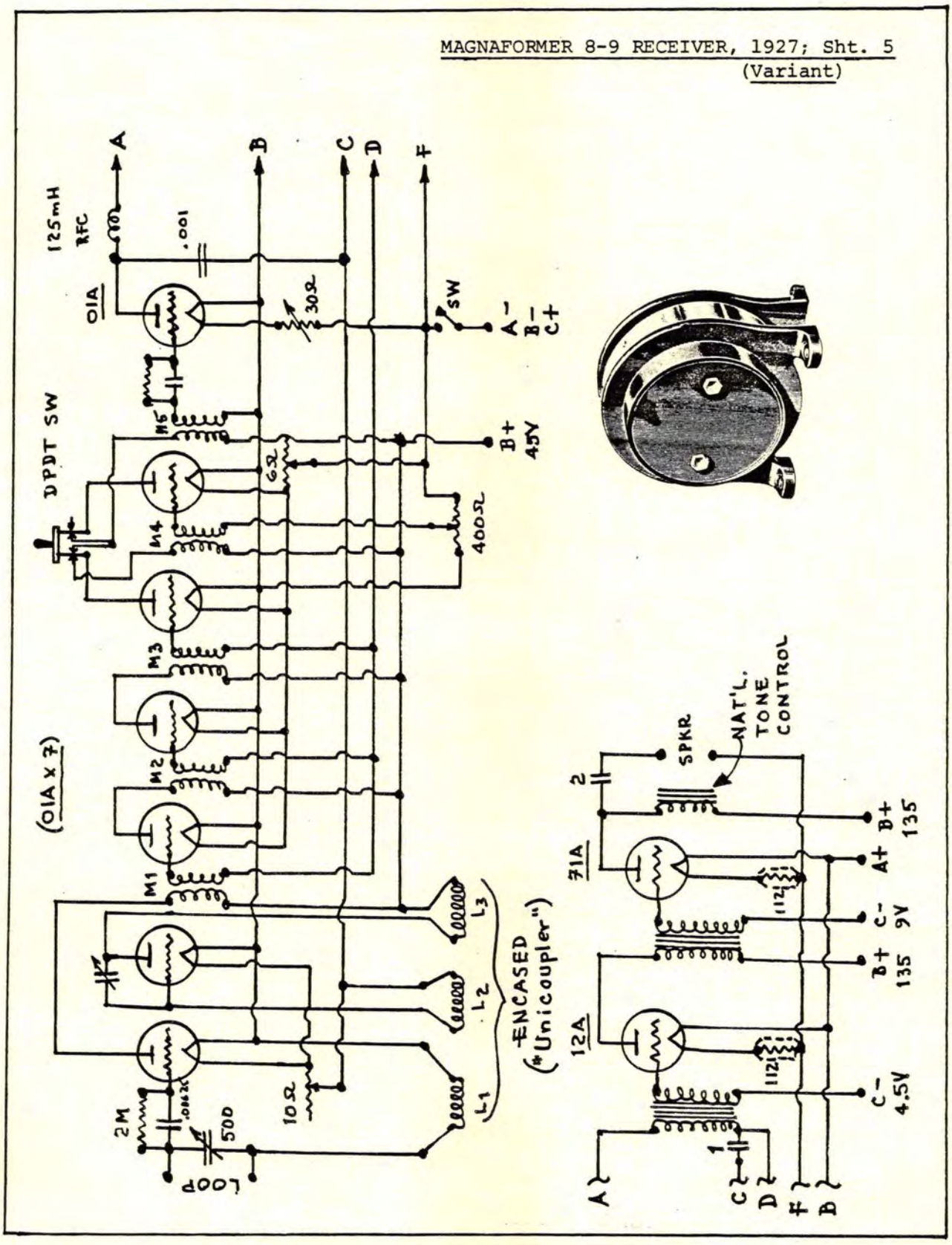

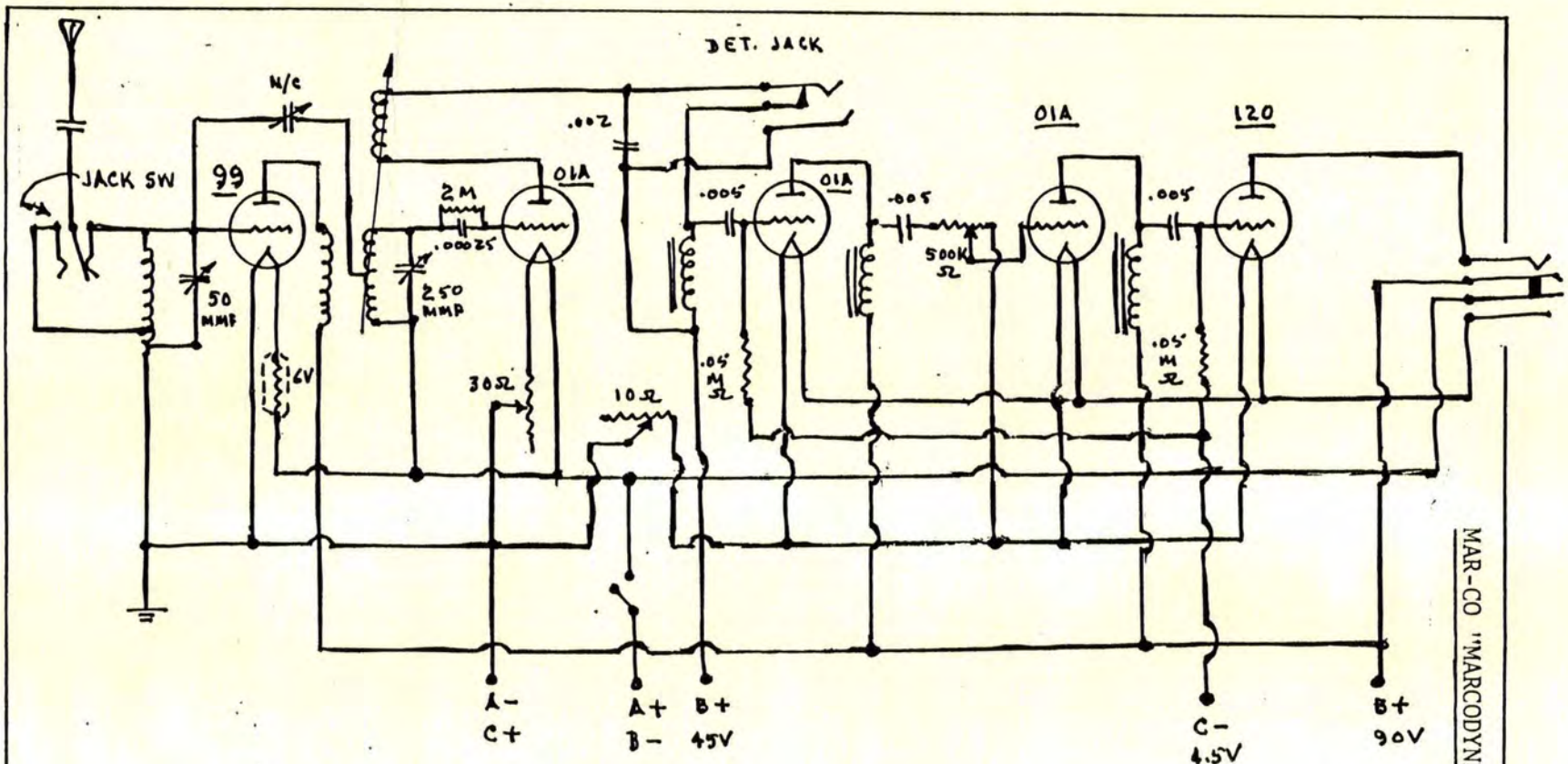

MAR-CO "MARCODYNE" No. 1 T.R.F., 1926 (Sht. 1)

Panel = 7" x 24".
(3) AF Impedance Chokes.
MAR-CO Dials & Variables.
N/C = neutralizing condenser.

(CB 26)(Kit-$25)

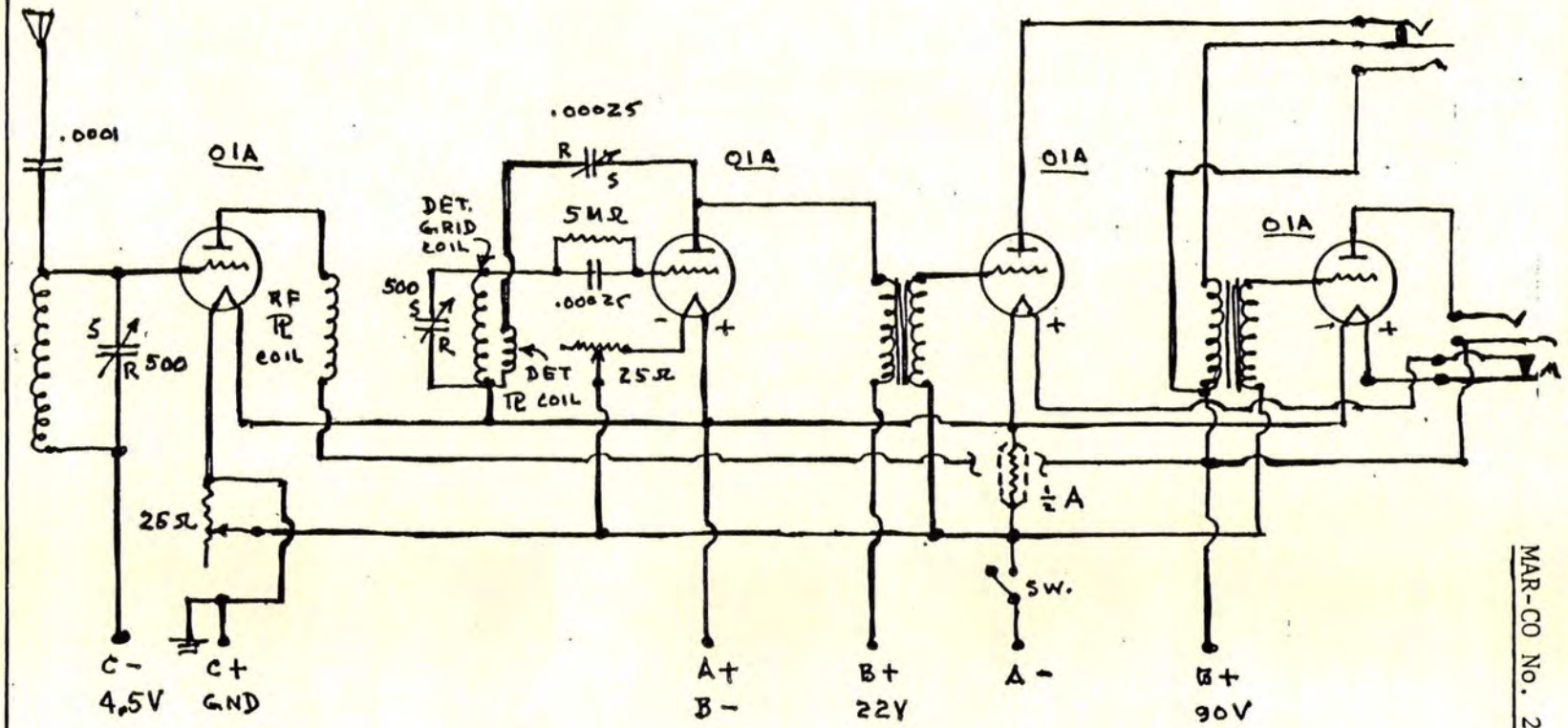

NOTES:
1. The 250 mmf variable is the main OSC control.
2. Vary knob until a whictle is heard, then trim OSC.
3. If whistle persists, turn down RF rheostat.
4. Panel = 7" x 24" x 3/16"
5. (2) Rauland R-500 AF transformers
6. Frost #656 25-ohm rheostats.
7. Frost #608 Battery switch.
8. Sub-panel = 8.5" x 23" x ½".

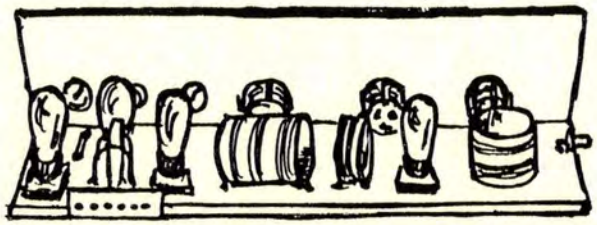

MAR-CO No. 2 T.R.F. RECEIVER, 1926 (Sht.2)

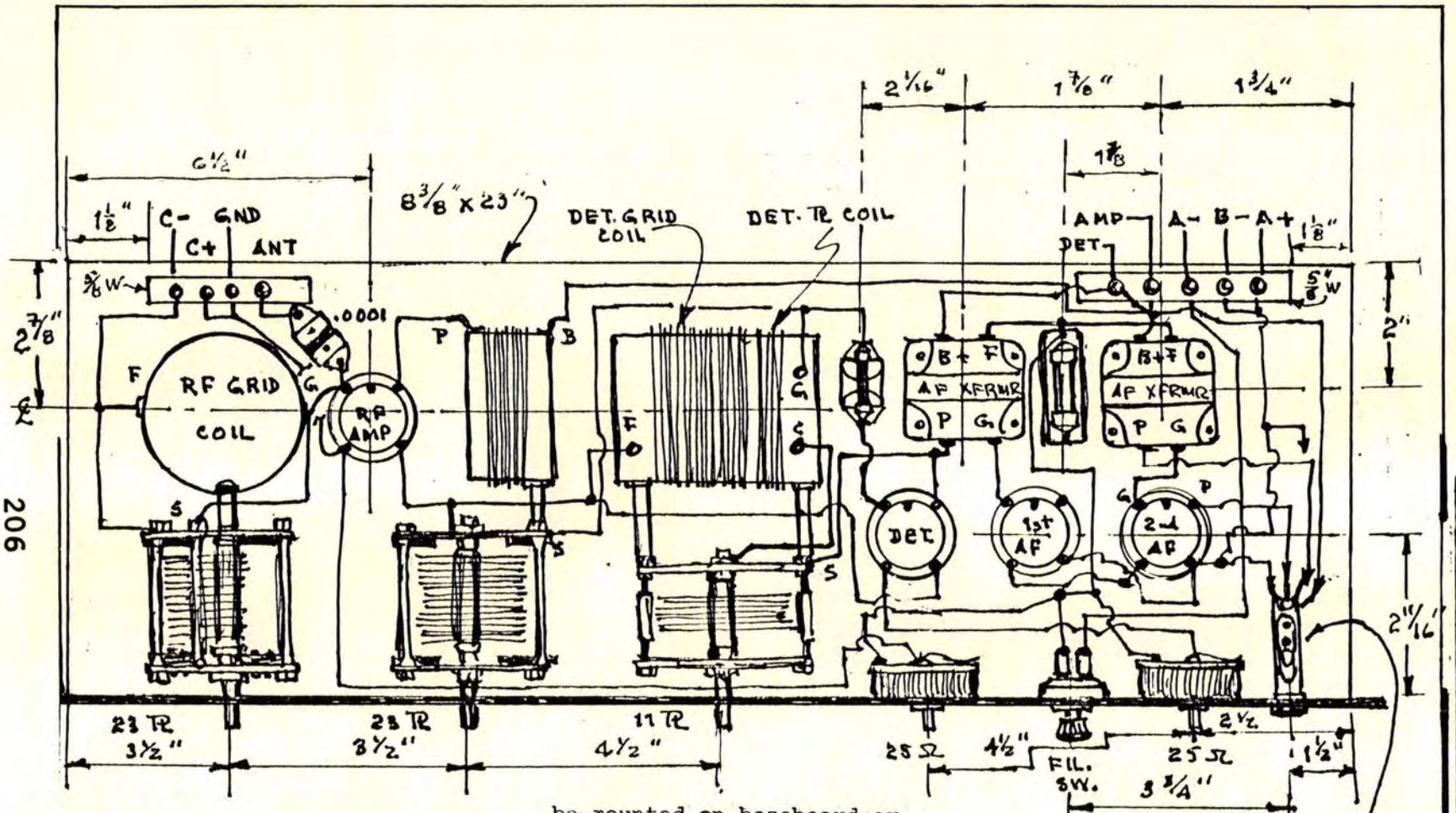

RF tube may be 99 or UV-01A; UX tubes may be used with proper sockets.
Distance between coils is critical, and they should be mounted on baseboard or as shown, as far back as possible.
Increase C-voltage or decrease Plate voltage to enhance stability.

"MARCODYNE No. 3" TRF, 1926; Sht. 1

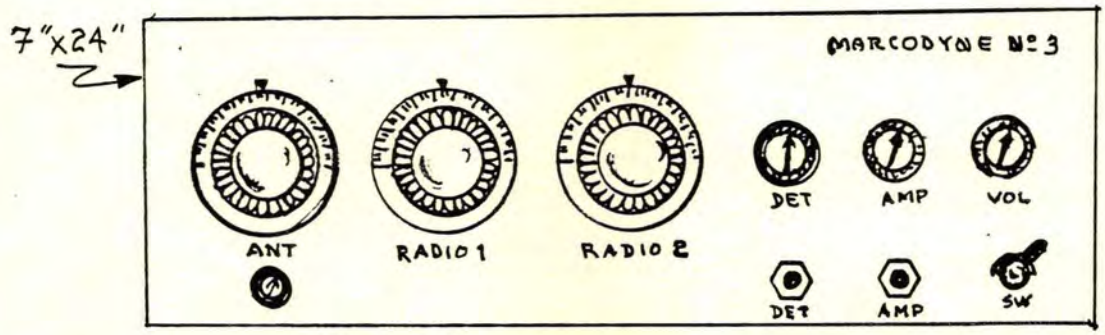

(4" RADION DIALS)

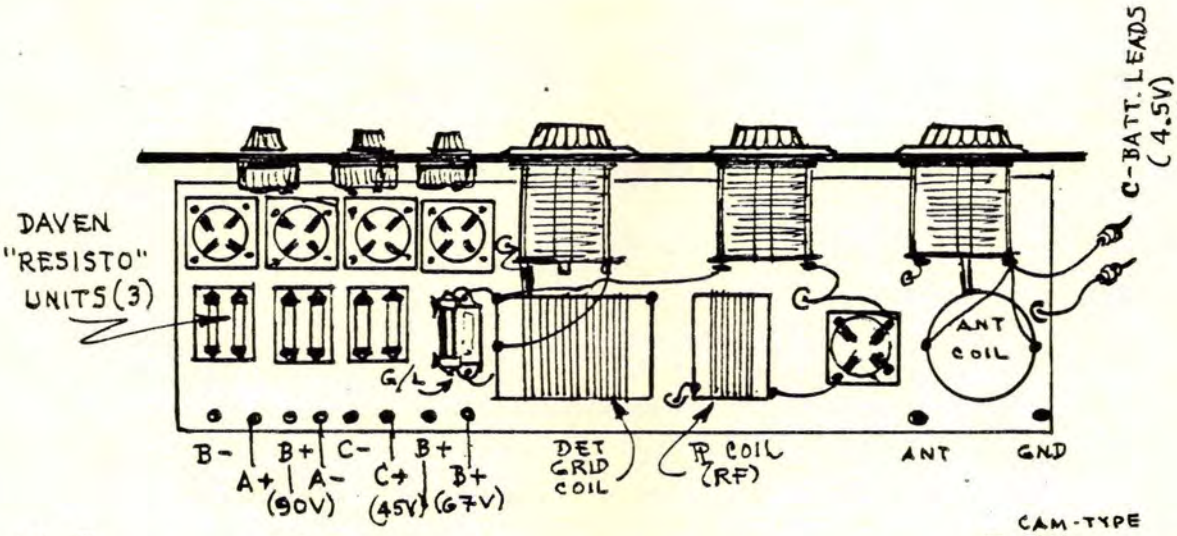

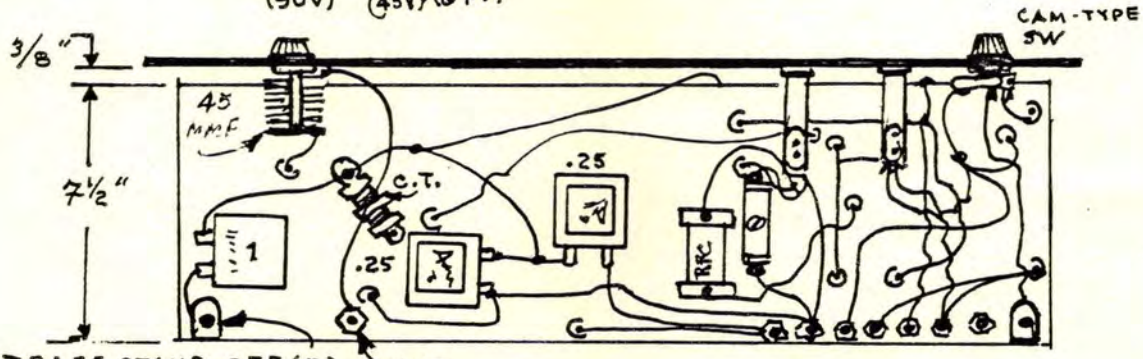

PARTIAL BOTTOM VIEW

(FILE)

"MARCODYNE No. 3" TRF, 1926: Sht. 2

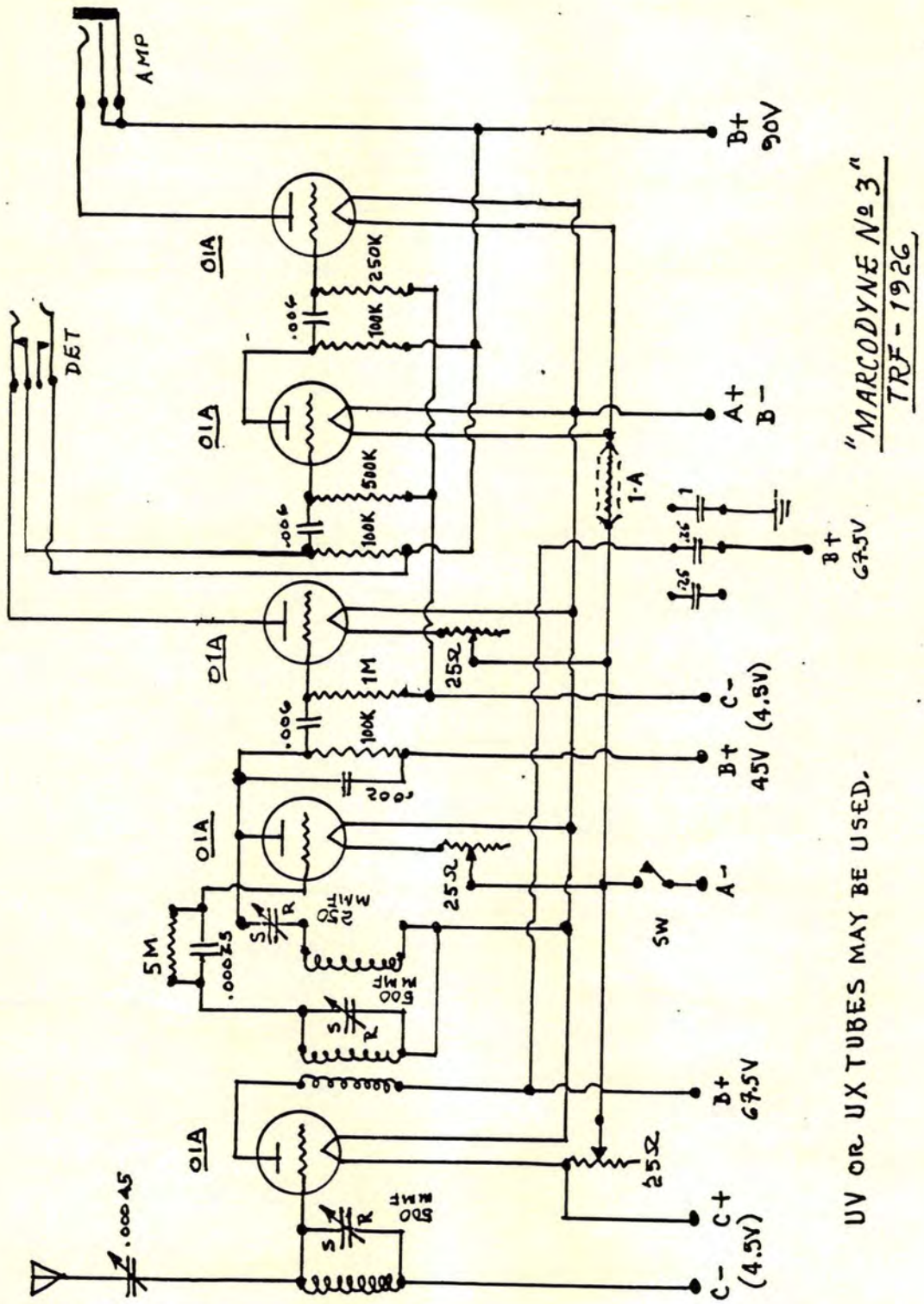

UZMANN LONG-WAVE RECEIVER, 1926
1,000 to 3,000 Meters

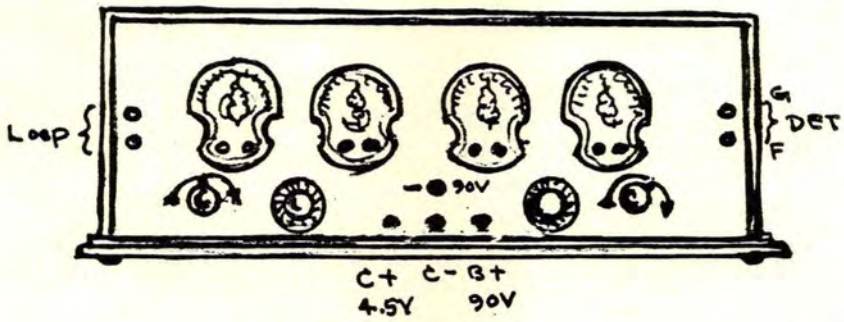

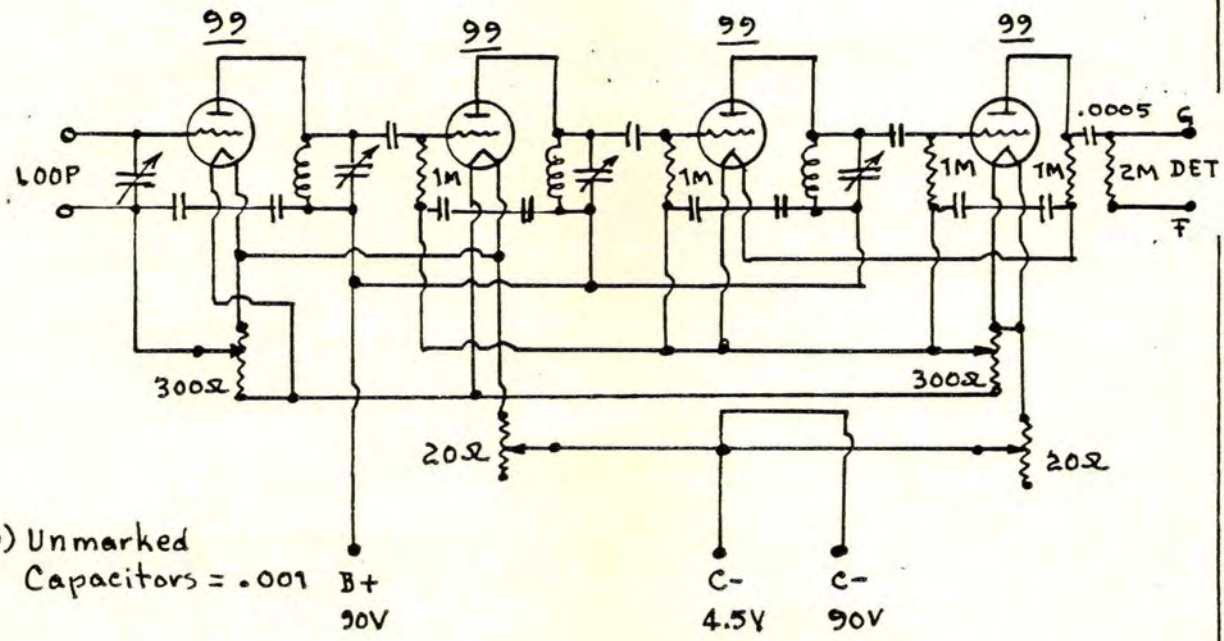

(9) Unmarked
Capacitors = .001

NOTES:
1. Coils = 200 Turns, Honeycomb (3)
2. Variable = 43 Plates (.001 MFD) (4)
3. Loop = 30 Turns, #20 DCC copper wire.
4. 300-ohm pots. = biasing grid 1st stage, and neutralizing all others.
5. Tubes mounted on3" x 10" x ¼" Bakelite strip
6. Note the application of -90V.

(RH-4-26)

GERNSBACK's "MEGADYNE" BC RECEIVER
(1932)

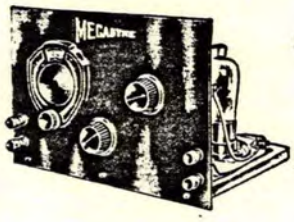

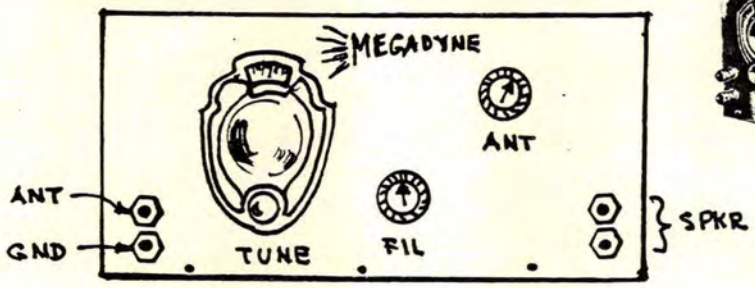

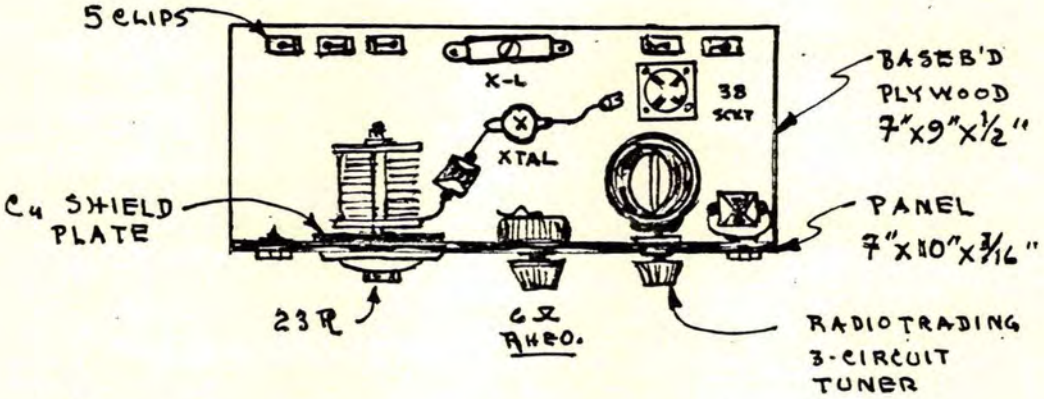

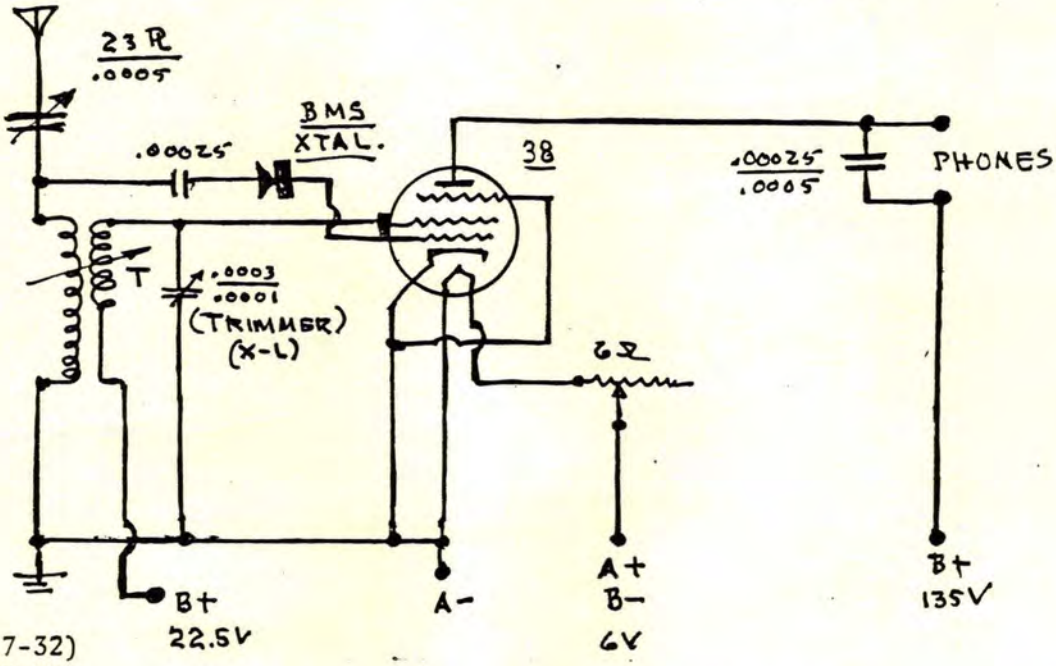

(RC 7-32)
(RC 9-32)

MAZDA "CONSOMELLO JR."; 1926,$50

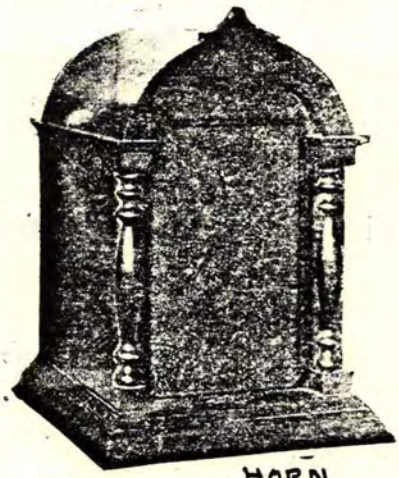

HORN SPKR. '28

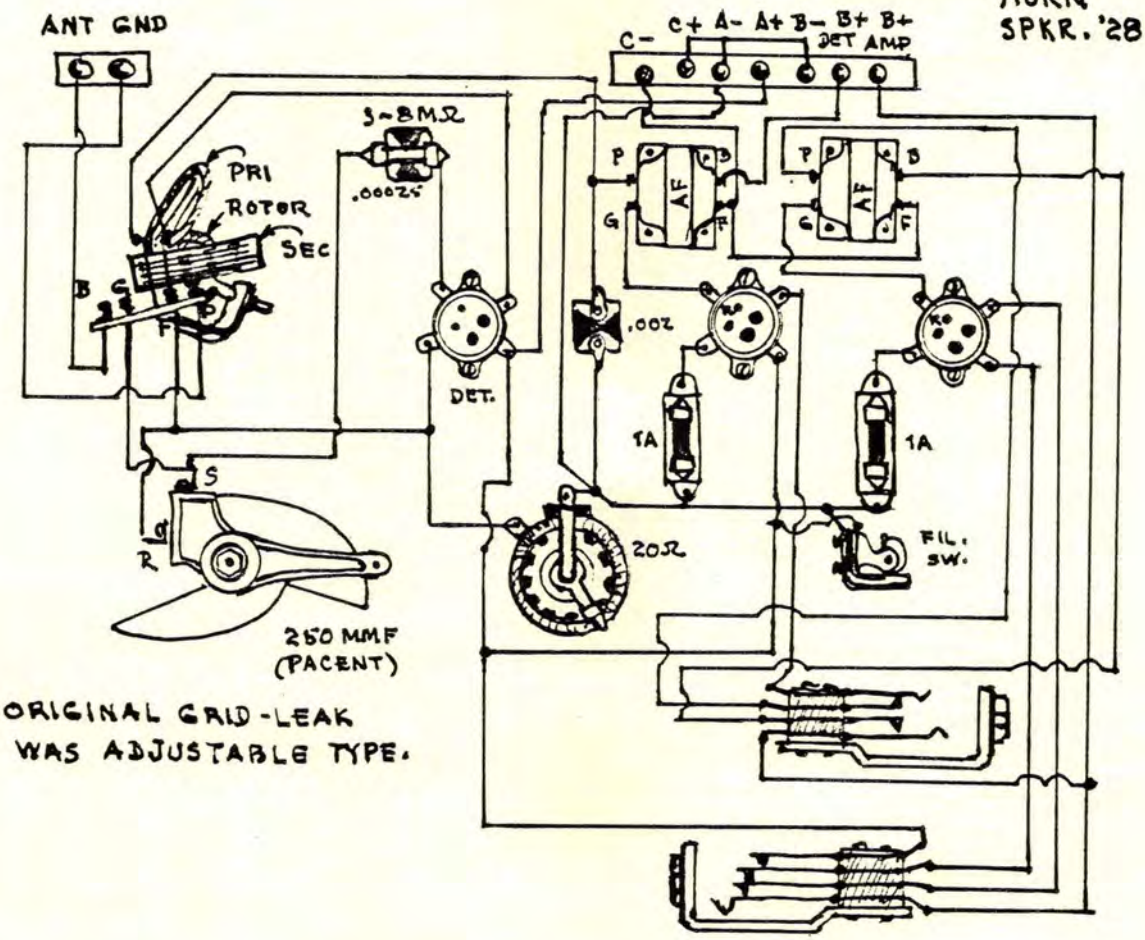

ORIGINAL GRID-LEAK WAS ADJUSTABLE TYPE.

(CB-Spr.26)

MELO-HEALD "ELEVEN" SUPER-HET, 1927; Sht.1

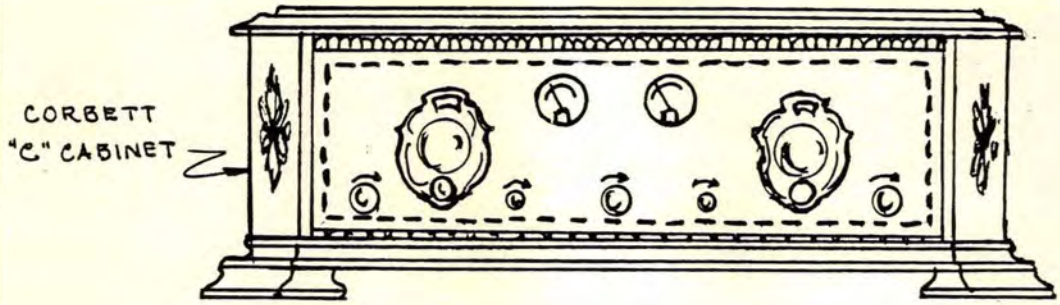

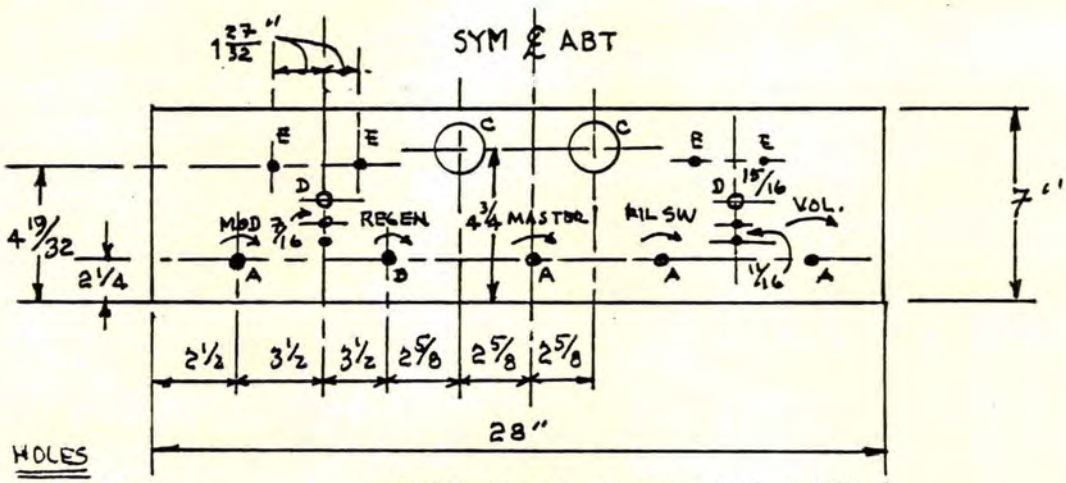

HOLES

A = 7/16" ø
B = 3/8" ø
C = 2 1/8" ø
D = 5/16" ø
E = 11/64" ø

LIGNOLE Panel. Base = 10" x 27"
(2) K-W Walnut Dials #592.
Jewell #135 & #135B Meters.
Hammarlund .0005 MFD Variables.
Hammarlund MC-9 Midget Variable.
Na-Ald Cushioned Sockets. (11)

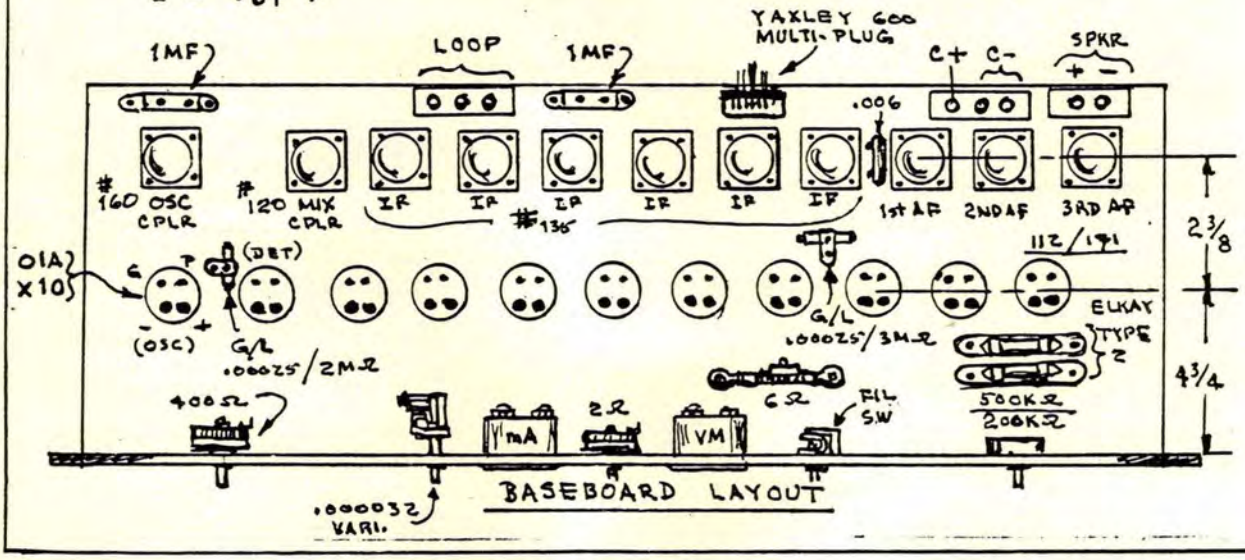

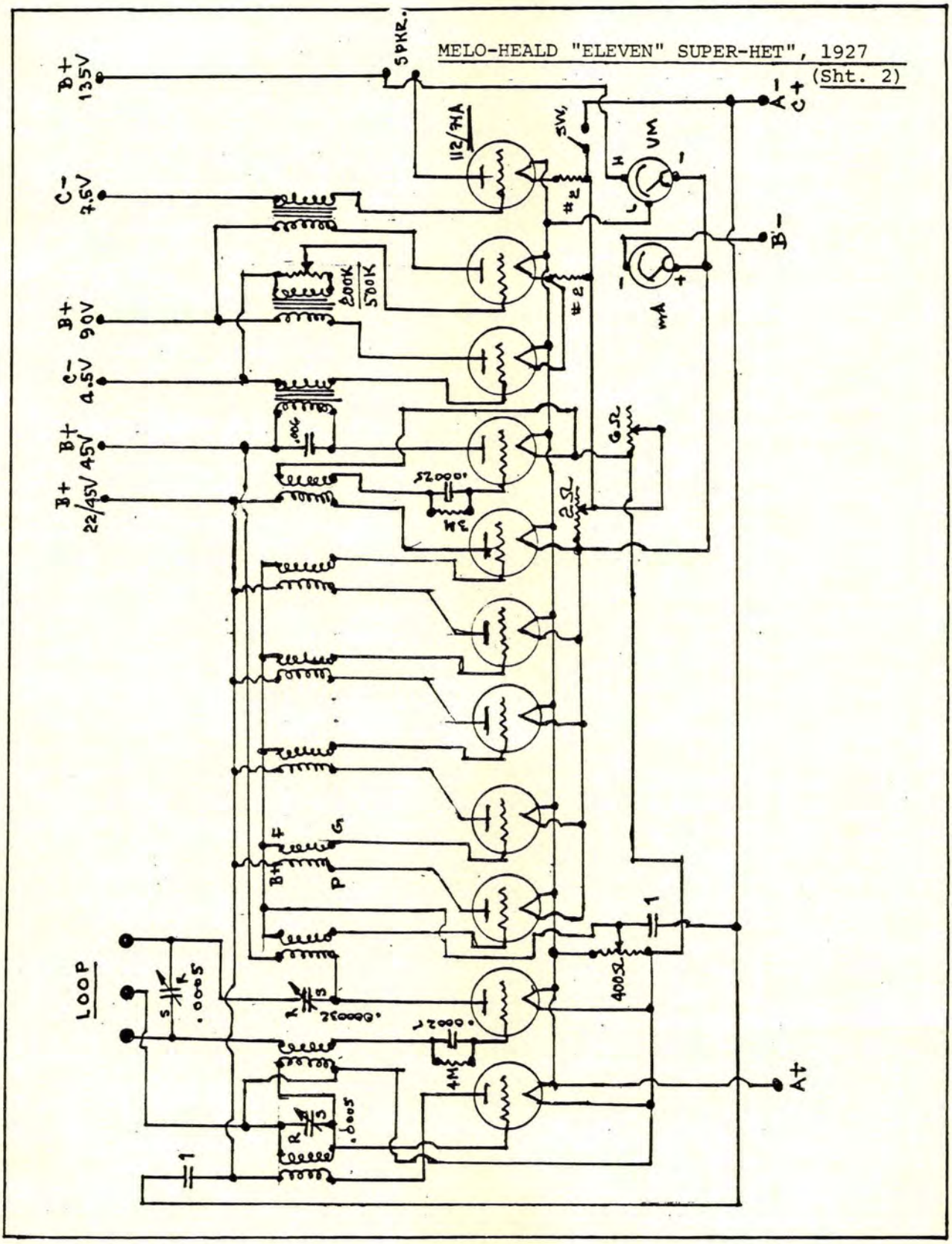
MELO-HEALD "ELEVEN" SUPER-HET", 1927
(Sht. 2)
B+ 135V
C- 7.5V
B+ 90V
C- 4.5V
B+ 45V
B+ 22/45V
SPKR.
112/74A
SW.
VM
mA
A+
B-
C+
LOOP
B+
F
G
P
.0005
.0005
.0005

(Sht.1)

THE CANADIAN "MERCURY" SETS

After the Kaiser's War, all countries were engaged in advancing the infant art of Radio, with Germany and England making the most notable advances, not the least of which was the screen-grid tube. Caught-up in our own pursuit of Radio, we tend to forget that there were others equally dedicated and involved. And while it was true that RCA and Marconi dominated the world's manufacture and sale of radios, there were notable contributions by others which were not predicated upon dominance.

Canada never had an indigenous radio industry. Radios were in the main produced for the Canadian market under a veritable niagara of licenses from a variety of foreign companies, again - chiefly Marconi and RCA, or its subsideries. Even Northern Electric of Canada produced tubes under license, although they seem to be remembered mostly for their R215A valve, which we know as the "Peanut Tube".

Probably the most "national" of Canada-produced radios was the MERCURY series, produced by H.M.Kipp of Toronto.

Our early radio media published quite a few adverts from foreign companies, such as England, Australia, France, and Canada. But such ads were not maintained beyond 1926. Also, there were no technical details of the radios or accessories they offered, save the Bretwood variable resistor; nor were their radios ever detailed in the magazine's editorial copy. Kipp, for example, placed small one-inch adverts in Radio World in 1924 which simply stated that a MERCURY radio was for sale.

By 1928 Kipp had standardised on a 10-tube jobbie he called the MERCURY SUPER TEN. It was a design he held to for four years without making changes for the sake of changes. Like most British engineering efforts, it was over-designed and curiously constructed, considering the state-of-the-art of the period. But the popularity of the MERCURY SUPER TEN was attested to by its use by the Royal Mounted Police, The Toronto Star (to pick up foreign news), King George V, the Hudson's Bay Company, et al.

The following pages contain a bit of data on the MERCURY SUPER TEN, which could be of passing interest. The pertinent details are there, but as there was nothing radical about the super-heterodyne circuitry, the schematic has been deleted. The fact that Kipp catacombed five stages of RF using honeycomb coils was after the fashion of the day, as the idea of catacombs was also being practiced by Alden, RCA, Silver-Marshall, etc. The method of peaking the IF coils was novel, and strictly British, as there were simpler techniques around at the time.

* * *
* *
*

THE CANADIAN "MERCURY"; Sht. 2

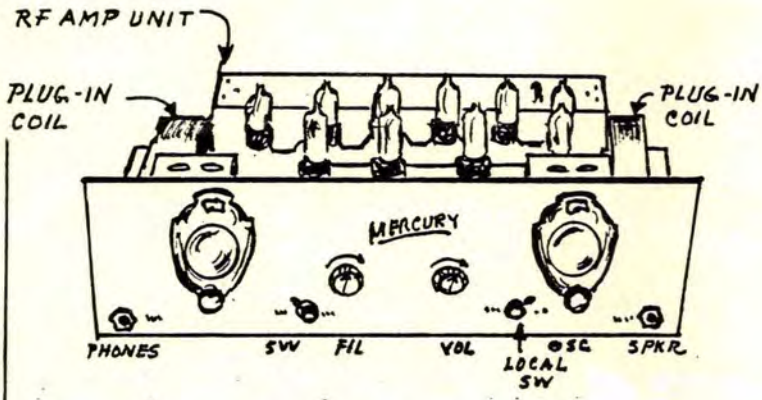

"SUPER TEN"

1. (5) S.G. 24s; (3) 27s; (2) 45s.
2. Tubes in Series-Parallel.
3. Max. "B" drain = 12 mA.
4. 5 stages of IF amplification.
5. Single P-P AF stage.
6. 12-15 KC. signal seperation.
7. Chassis = 18" x 6½" x 8½".
8. Also known as "STANDARD SW. TEN".

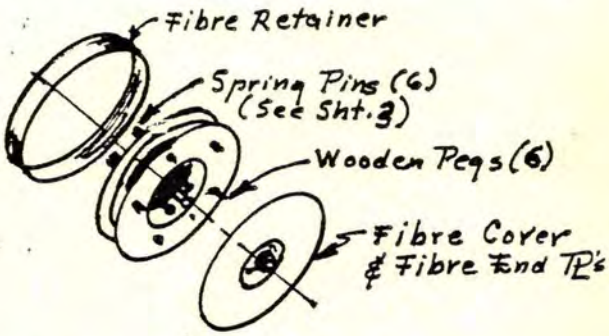

PLUG-IN RF COILS
(Moorecroft Style)
Exploded View.

The "SUPER TEN" was also offered in a "DeLuxe Jewel-Box" cabinet; see over-leaf for a detail.

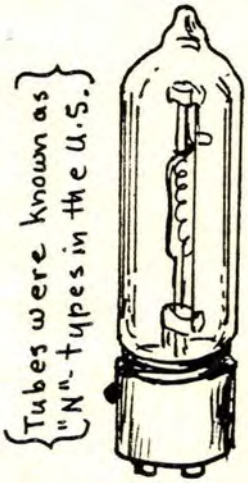

"PEANUT" TUBE
(Full-Scale)
R-215-A

FIL mA. .25 A
FIL V. .85/1.10V
DET TP 22-45V
AMP TP 90-135V
GRID V. -9
AMP. Constant 9
OUT. IMP. 15KΩ

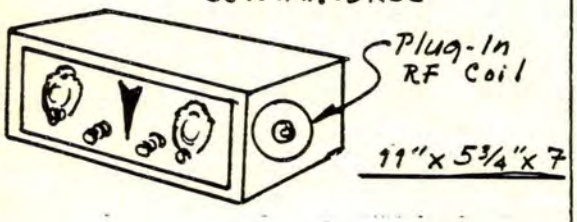

"SCOUT" (10 TUBES)

Plug-in coils = 9 - 190 meters.
Original cost = $130 (U.S.).
Local Station Switch.
Remote control available for $20.
Also used in automobiles.
Tubes manufactured by Northern Electric.
Completely wired, less cabinet, at factory.

THE CANADIAN "MERCURY; Sht. 3

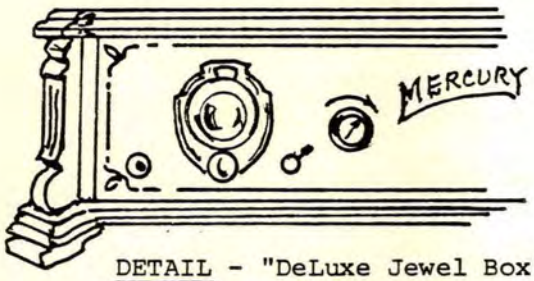

DETAIL - "DeLuxe Jewel Box"
Solid Walnut Cabinet.

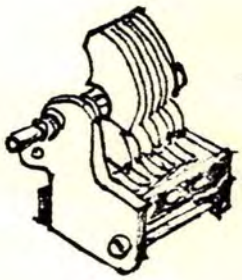

OSC. TUNING CONDENSER

Split-Type: 3-plate sexion used for Ultra-SW: the other sexion for standard SW. Isolating the two capacities was done automatically when a coil was inserted.

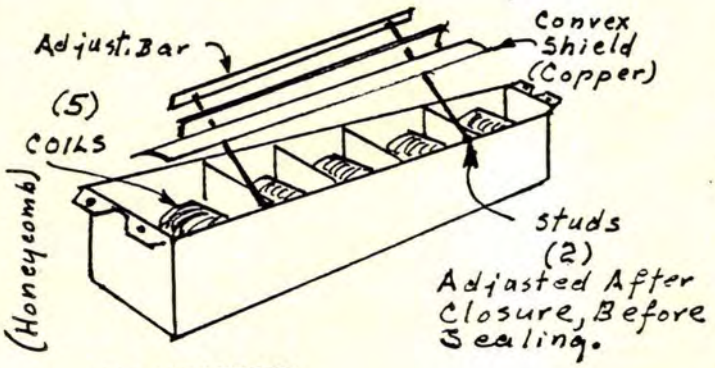

RF AMPLIFIER

Two brass screw-studs secured from the bottom after closure governed the amount of leak between each coil - i.e., for peak IF.

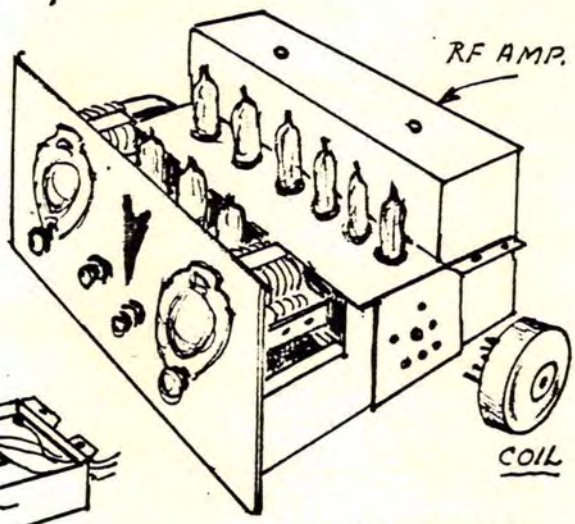

"SCOUT" CHASSIS

(P-P Not Used In This Model.)

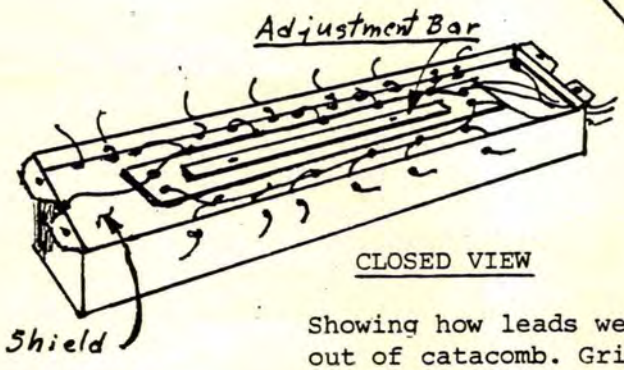

CLOSED VIEW

Showing how leads were brought out of catacomb. Grid & Plate leads 1" long. Unit sealed at the factory.

A COMPACT AC-DC TRF MIDGET, 1933

(7½" x 6" x 5½")

NOTES:

1. TRIMMERS NOT SHOWN ON VARIABLES.
2. ALL PARTS INSULATED FROM CHASSIS.
3. L_1 = SICKLES ANT CPLR.
4. L_2 = SICKLES RF COIL. (Others may be used.)
5. 100V ON TP & SCREEN of THE 78 & 12A7.
6. 10V ON "K" of 12A7.
7. 4V ON 78 "K" @ FULL VOL.

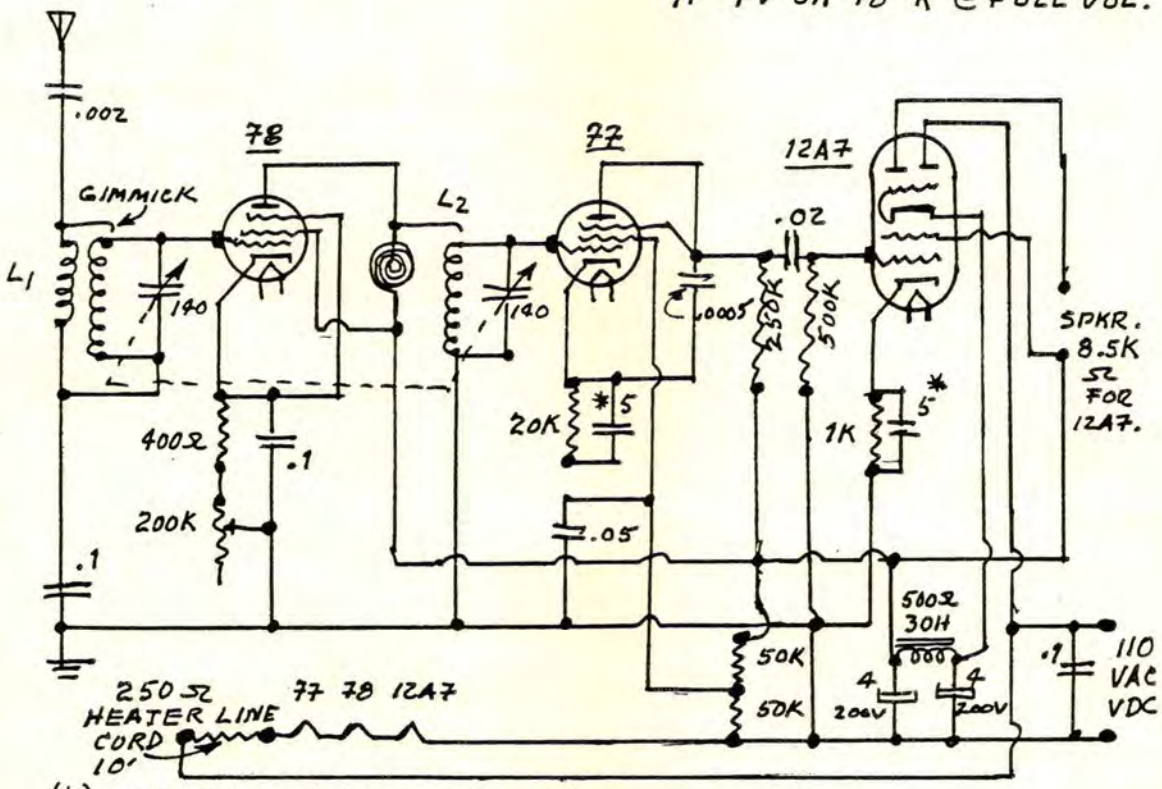

(*) = ELECTROLYTICS, 25 VW.

(RN 5-34)

MOHAWK "NAVAJO" 5-TUBE RCVR.,: 1926
(Sht. 1)

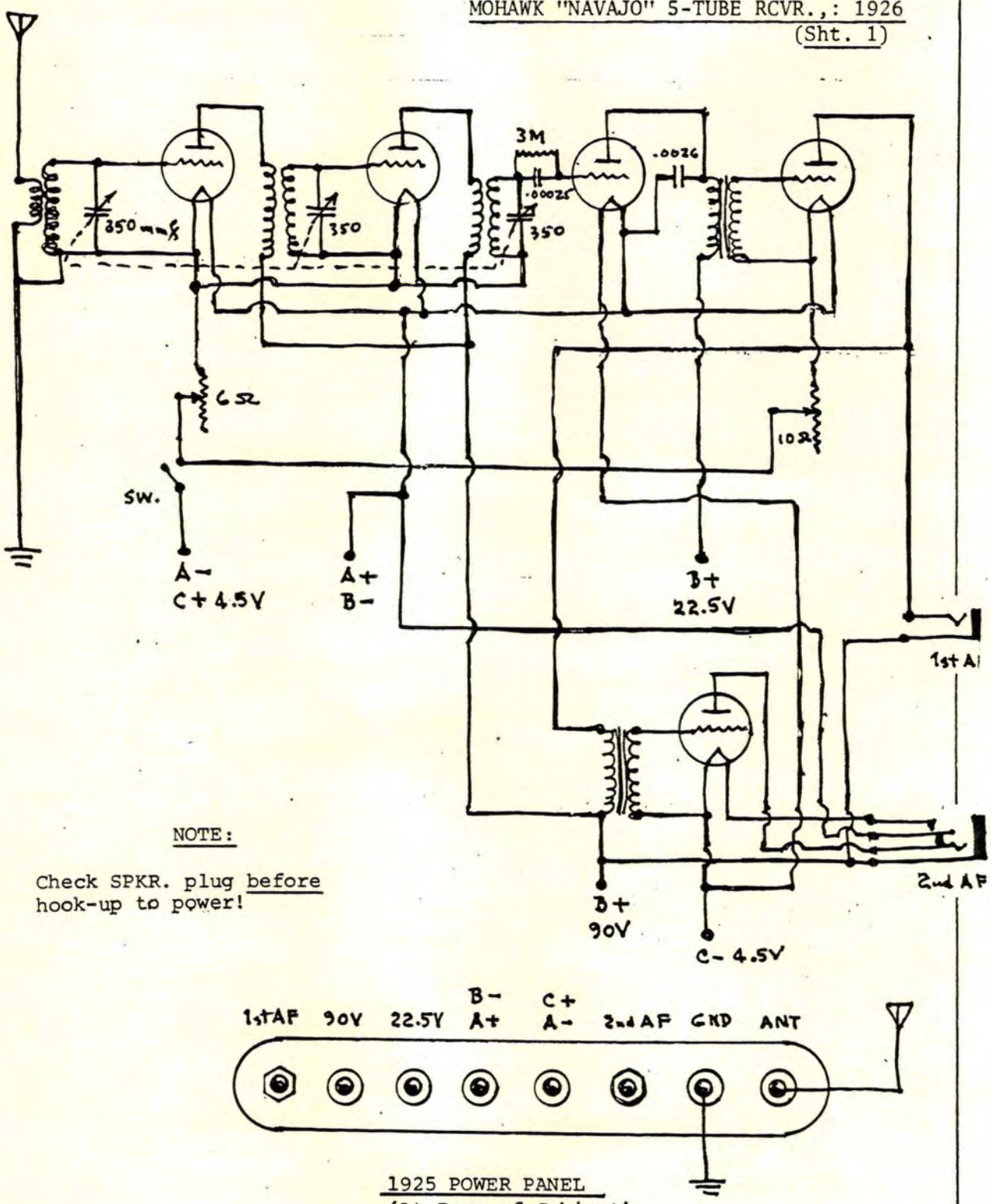

NOTE:

Check SPKR. plug before hook-up to power!

1925 POWER PANEL
(At Rere of Cabinet)

MOHAWK "NAVAJO" 5-TUBE RCVR.,1926
(Sht. 2)

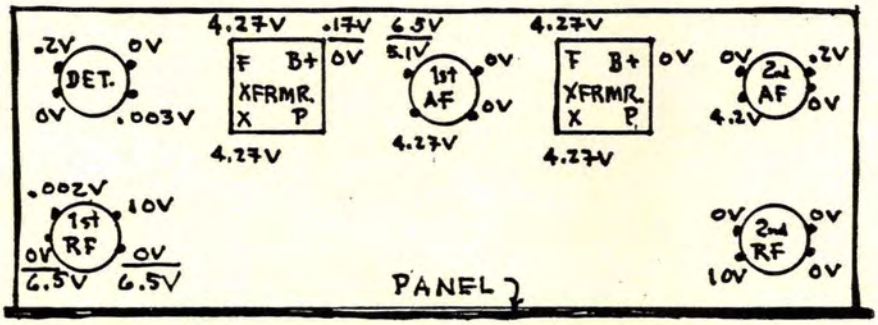

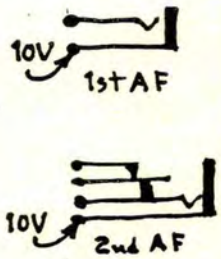

BOTTOM VIEW

1. Socket voltages are with tube removed.
2. B+ and C+ are not to be applied.
3. 6.3VDC applied at INPUT terminals & GND.
4. There should be no voltage change when rheostats are operated.
5. Switch should be opend and then closed.
6. Read dual voltages with switch ON.

NOTE: The above voltage measurements were taken from the Model "VA", 1925/1926 circuitry.

MORRIS "SIMPLICITY" RECEIVER; 1927
(Sht.1)

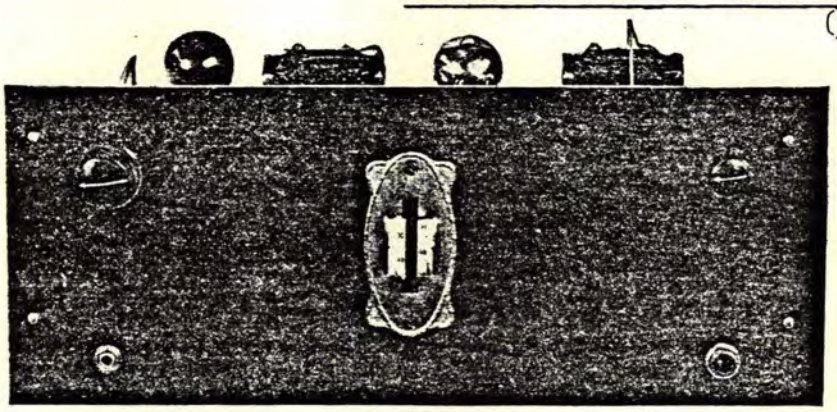

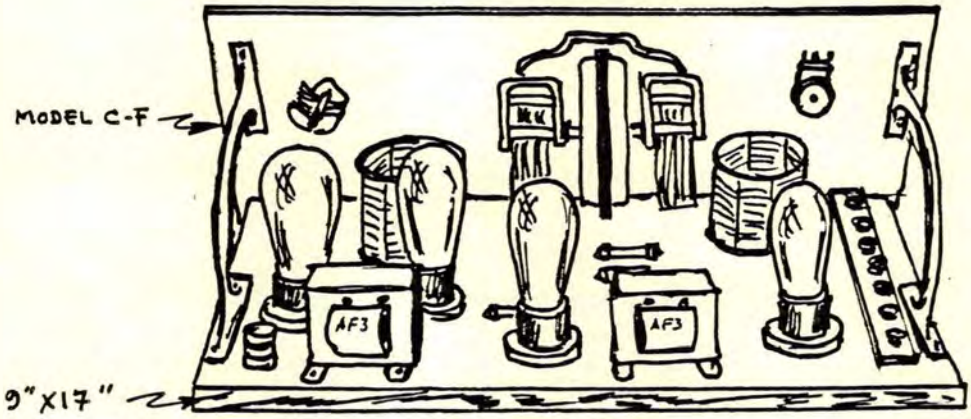

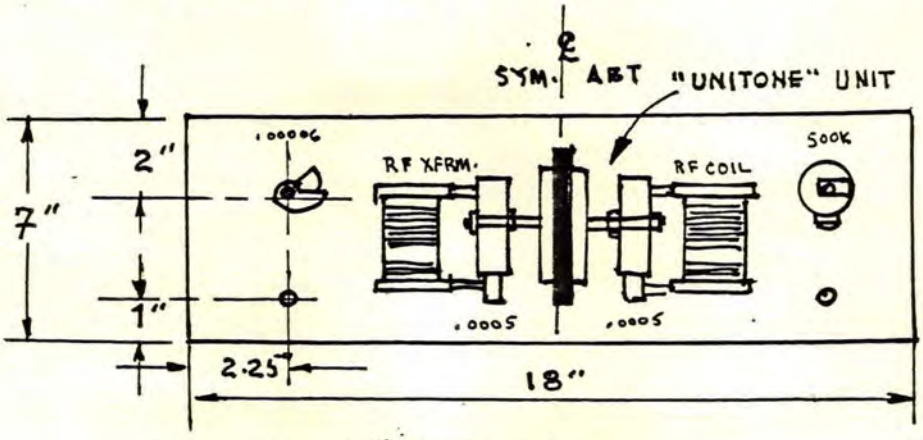

Ferranto AF-3 AF xfrmrs.
Hammarlund MC-15 Midget
Bruno RF "Unitone" unit; or, Model CF.
8 binding bposts

"Precision" 340 RFC
X-L Model "N" (N/C)
112 & 1-A Amperites

(R 1-27)

MORRIS "SIMPLICITY" RECEIVER, 1927
(Sht. 2)

NOTE: 1. This unit was kitted by BRUNO at $53. It is very similar to BRUNO's "Powertone" receiver, q.v.
2. The BRUNO "Unitune" unit was an RF tuning assembly, consisting of 2 RF coils, 2 variable condensres, & 2 drum-dials. It was mounted as a rigid assembly, and could be bought separately for $12 to $21.
3. The Rice system of neutralization was used; however, the Browning-Drake system worked just as well.
4. ANT coil SEC = 56 turns, tapt at turn #26.
5. Some early FERRANTI AF xfrmrs. had a terminal marked "Earth". This was and is the European equivalent for GND, not chassis ground.

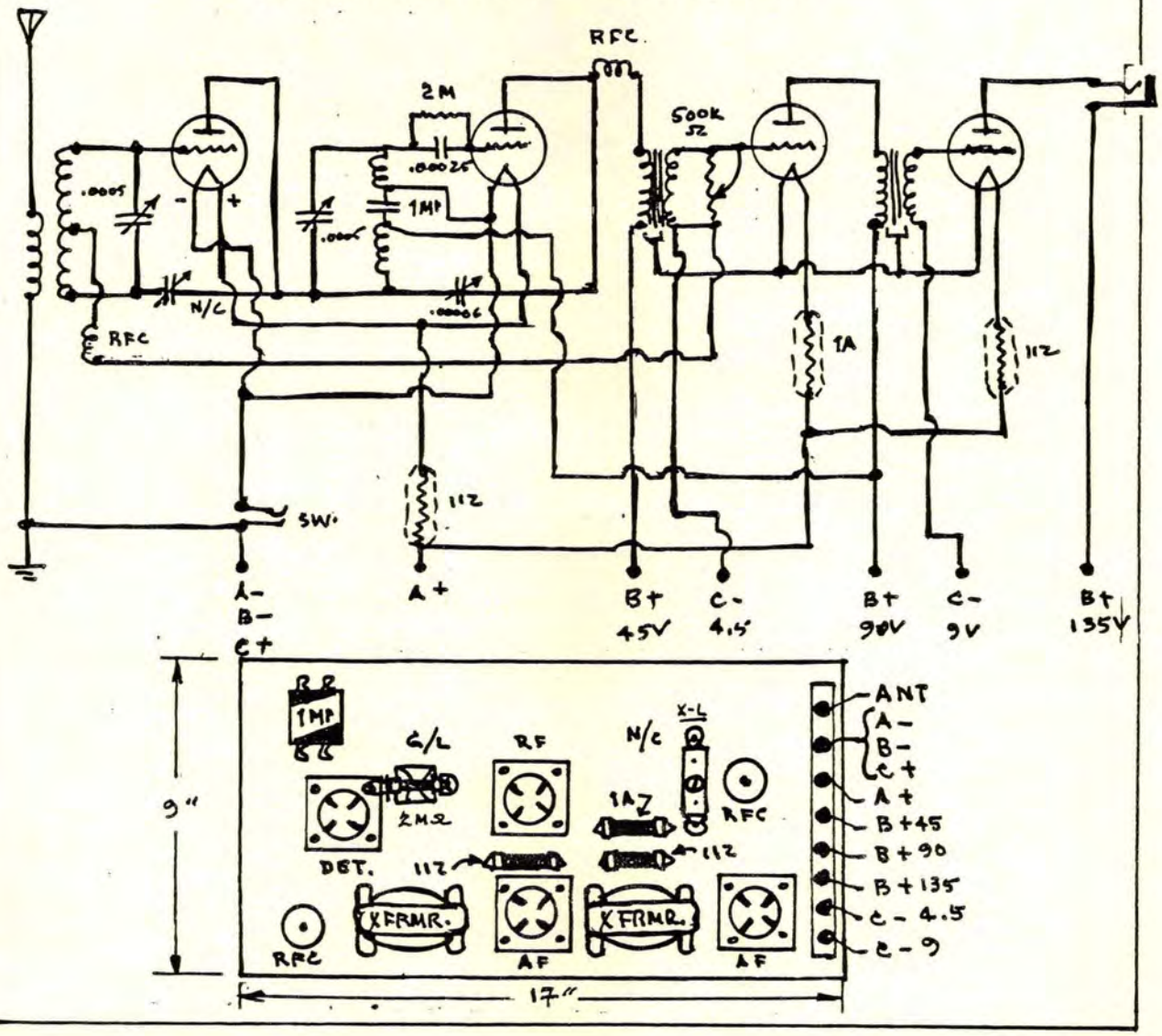

MU-RAD MODEL MA-15 T.R.F. - 1923;Sht.1

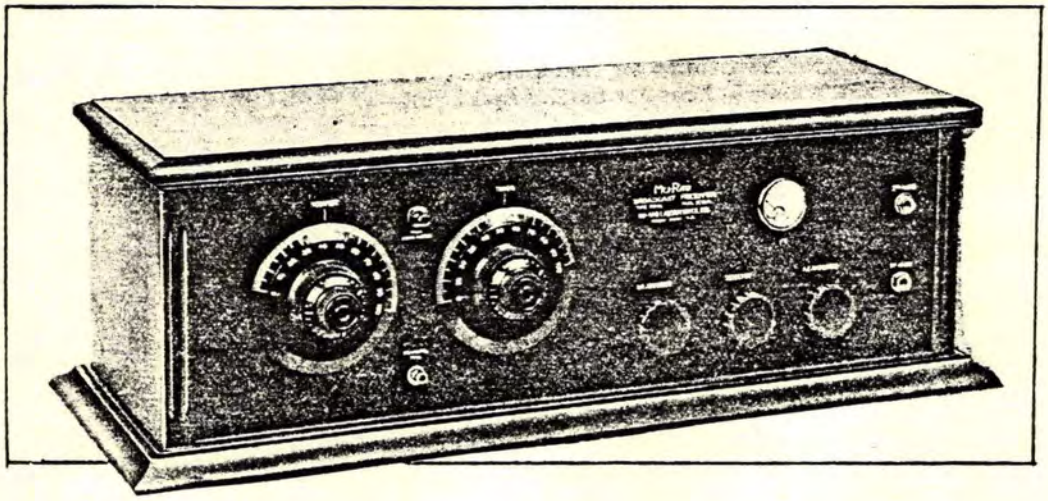

"ONE THOUSAND MILES ON A TWO-FOOT LOOP!!!" (Advert)

NOTES:

1. RF coils were plug-in type.
2. All tubes were 01A.
3. Solid mahogany cabinet.
4. All RF coils were identical; refer to Sheet 2 for coil-winding data
5. P-P switch = Push-To-Test; indicates B+ voltage on the meter.
6. Vernier dials and an engraved panel.
7. Refer to Sheet 2 for schematic.

MU-RAD MODEL MA-15 T.R.F., 1923;Sht. 2

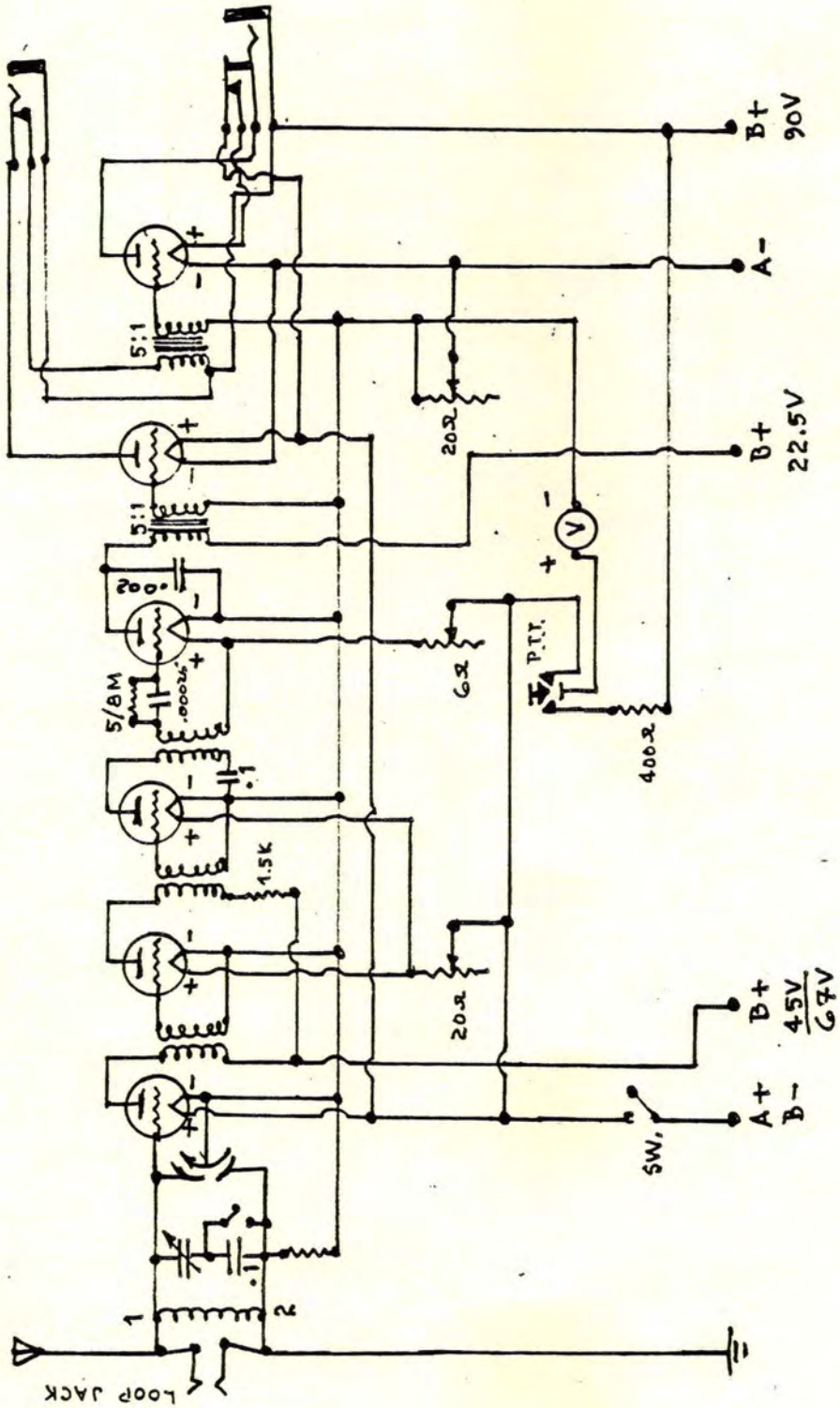

P.T.T. = Push-To-Test.
ALL COILS: PRI = 26T, #24 DCC
SEC = 42T, #24 DCC

MU-RAD "SUPER SIX" TRF, 1926; Sht.1

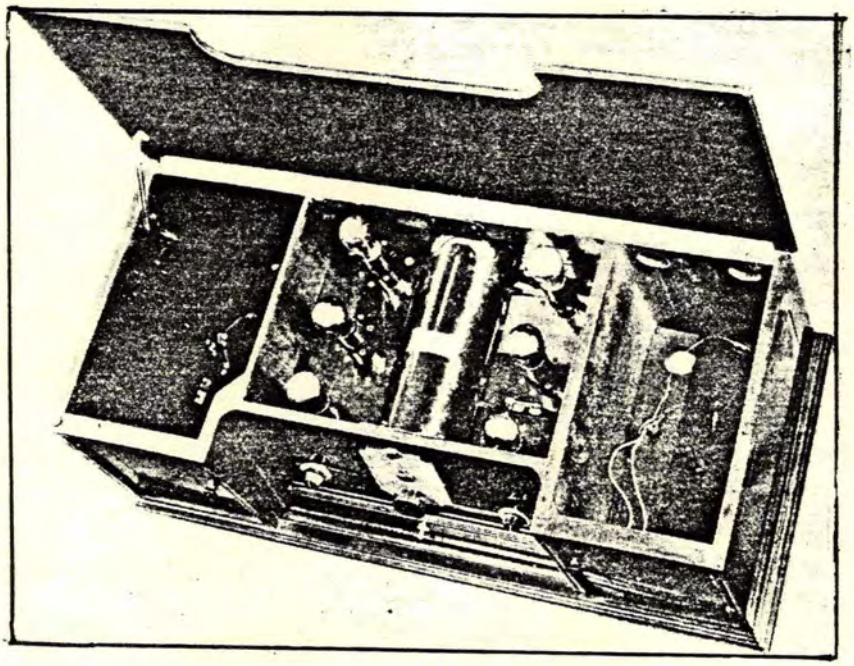

Available with two panel configurations; see Vol. V. The cut above depicts the Model B. Both had 2 stages of RF, DET, and 3 stages of AF. Tube complement was (5) 01As, 12A or 71A. Dial gear ratio 5:1.

MUSIC MASTER - WARE REFLEXED NEUTRODYNE
(1926)

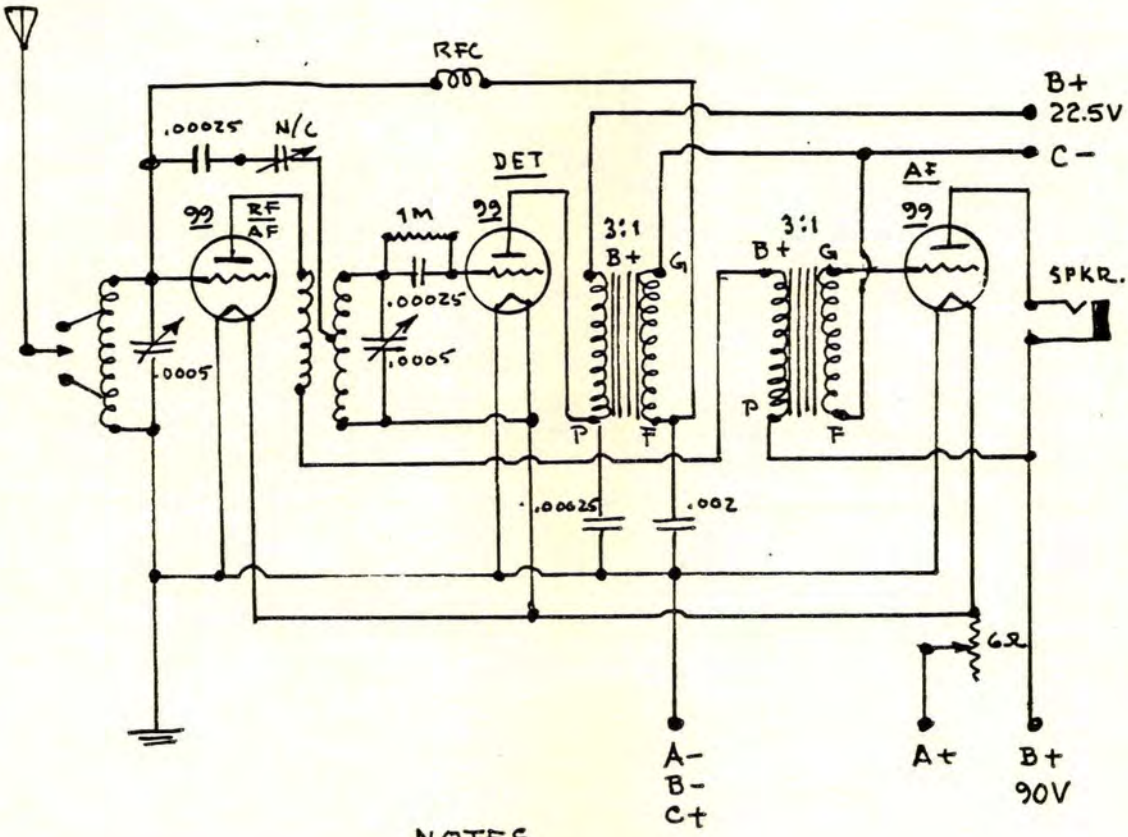

NOTES

1. The chief trouble w/ this set in the early days always could be traced to the AF xfrmrs. If you have this set (unless you are a purist) simply replace the AF xfrmrs. w/ later models, such as Samson, Thordarson, General Radio, etc.

2. A metal panel was used in this set, & shorting frequently occurred between A-, or GND & the TR circuits, or A+. If the original insulation is frayed, replace the wiring.

(R 4·26)

SARGENT-RAYMENT SIX S.G. RCVR.
(See INFRADYNE Monograph.)

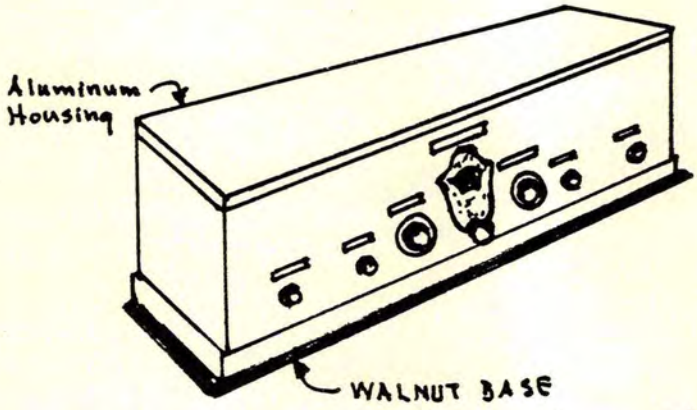

4 Tuned RF Circuits.
3-Stage S,G, Amplification.
Individual Verniers.
Detector.
2 AF Amplifier (Clough).

Aside from being rare in terms of collecting vintage radios, this model was the precursor to the Sargent-Rayment Seven, which proved to be rather popular for a couple of years, being pushed by Silver-Marshall. For the basic circuitry, refer to the shematic of the S-R 7. To publicise the Screen-Grid Six (using the new 22 tubes), S-R published a 16-page booklet entitled "Radio Par Excellence - 1929", which was distributed gratis. Kit $120.

SAMSON SUPER-KIT, 1925 ($22.50)
PANEL CONFIGURATION

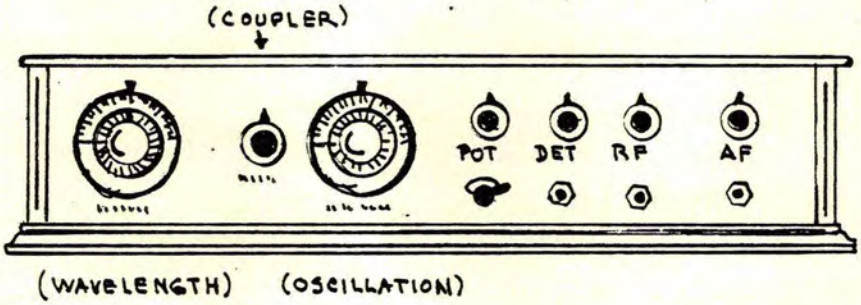

(3) SAMSON L.W XFRMRS.; FILTER XFRMR.; OSCILLATOR CPLR.

A REFLEXED NEUTRODYNE, 1925; Sht. 1

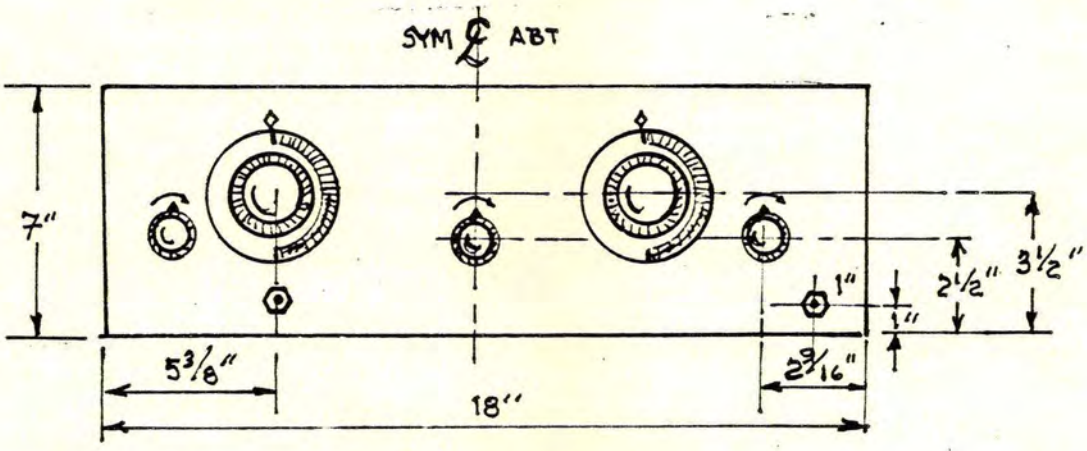

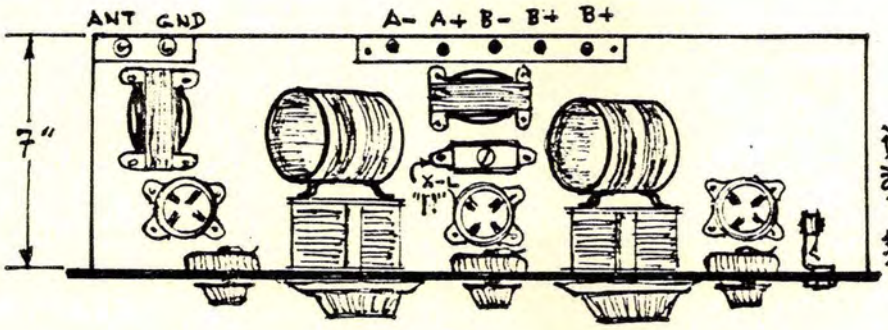

NOTES

1) 99 TUBES.
2) BRETWOOD GRID-LEAK.
3) 6 Ω FIL. RHEO. (3)

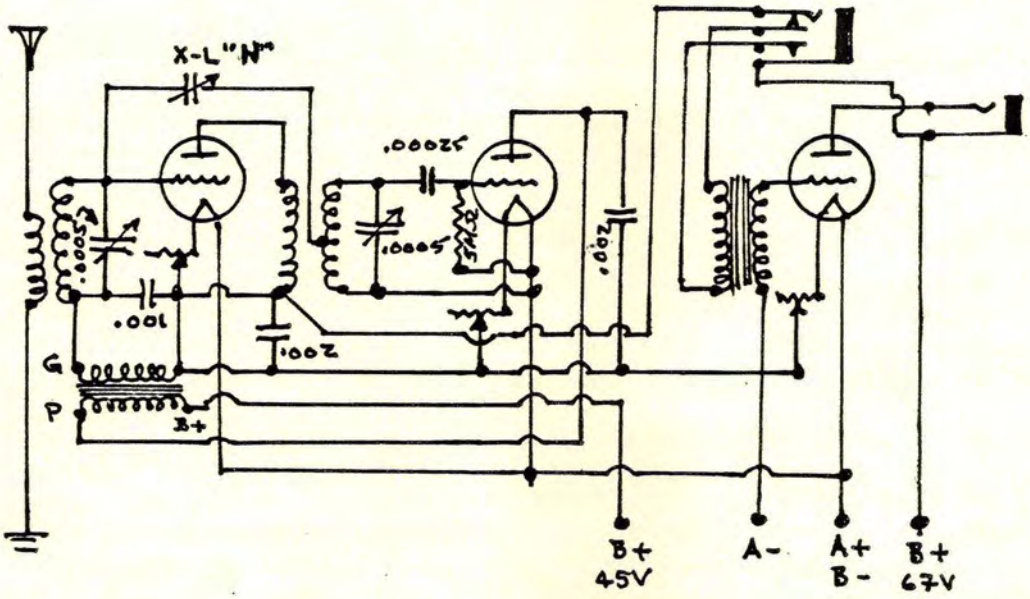

A REFLEXED NEUTRODYNE, 1925; Sht. 2

What is interesting about this set is that it was a radical departure from the concretised belief that only a 5-tube Neutrodyne was feasible. Engineers of the Twenties insisted that any set employing less than 5 tubes would compund the difficulties of neutralising, and would never have adequate volume. Percy Warren, in 1925, decided to reflex the Neutrodyne, and this was the result. The results, according to media of the day, were "eminently satisfactory".

Coil data are as follows:

ANT Coil = 12 turns of #22 DCC wire on a 3" Ø form; space 1/8th of an inch, then wind 45 turns for the GRID coil.

Plate Coil = Same as ANT coil; GRID coil same as ANT coil, with the 12th run tapt for the Neutralising condenser connexion.

The other end of the Neutralising condenser is connected to the stator of the first variable.

The "G" post of the first AF xfrmr. is connected to the grid return of first GRID coil and the other AF xfrmr. secondary connexion, as shown on the schematic. The first AF xfrmr. is of high ratio; the other, low.

The X-L Vario-Denser is the Model N.

Coil forms are both 4" long; four soldering lugs on each form. Drill a small hole between the PRI and SEC windings as a feed-through for wire.

Small brass angles are used to attach the coils to the end-plates of the variable condensers, both being home-made. Do not tighten these angles too tightly, as the angle of installation for the coils will have to be ascertained by trial-and-error. The conventional angle for Neutrodyne receivers of the period was 57.3°, and should be tried first.

When neutralising the set, place a piece of paper between one of the FIL prongs of the second tube and its contact spring. Turn the set on and fish for a strong local station. Adjust the X-L unit until any interstage coupling disappears. If, however, the set begins to oscillate, change the angle of the coils until the noise disappears. Then leave the X-L unit alone. Rotate both dials simultaneously.

* * *

NORDEN-HAUCK "SUPER DX" RECEIVER, 1930
(Sht. 1)

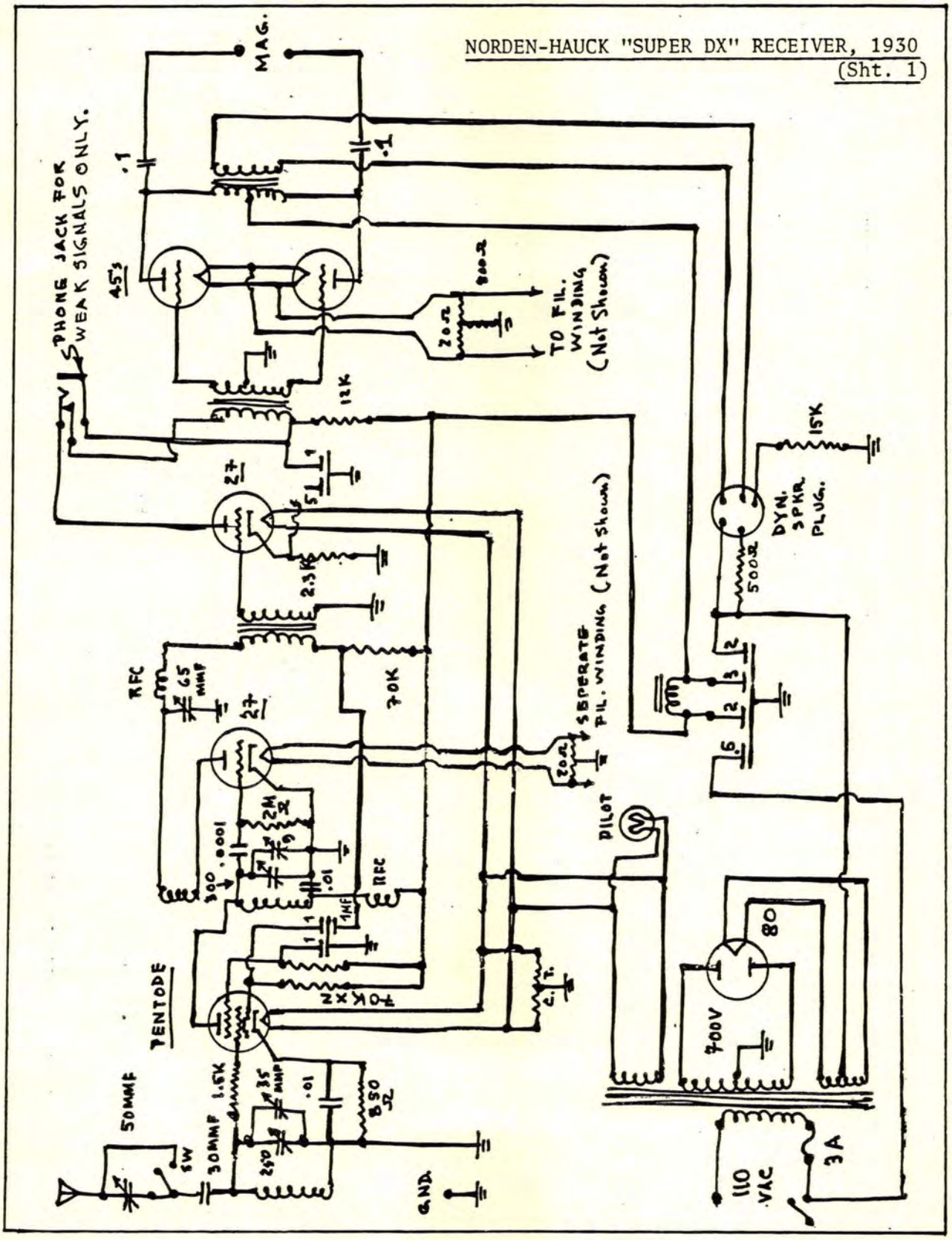

NORDEN-HAUCK "SUPER DX" RECEIVER ;'30
(Sht. 2)

GENERAL NOTES:

1. To use PM speaker, disconnect plug marked DYNAMIC SPKR.
2. There may be a slight increase in hum: a choke may be plugged in.
3. 3 sets of plug-in coils originally supplied by N-H: 1,500 to 15,000 KC.
4. Variable condensers are mounted in vertical position, a'la Grebe.

(CB-9-30)

"TOM THUMB" PORTABLE, 1924

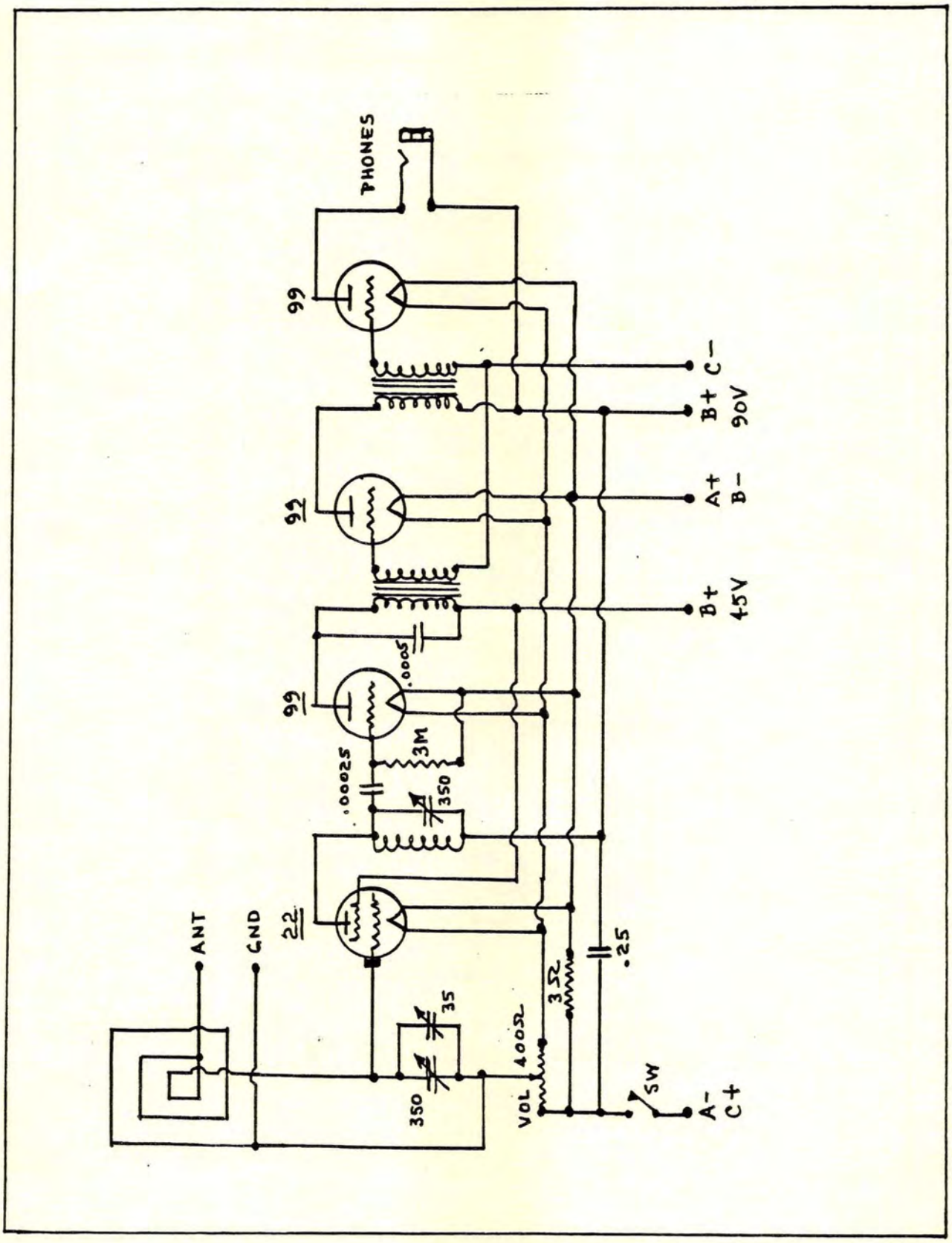

"PIERCE AIRO" 6-TUBE CHASSIS, Sht. 1
($50)

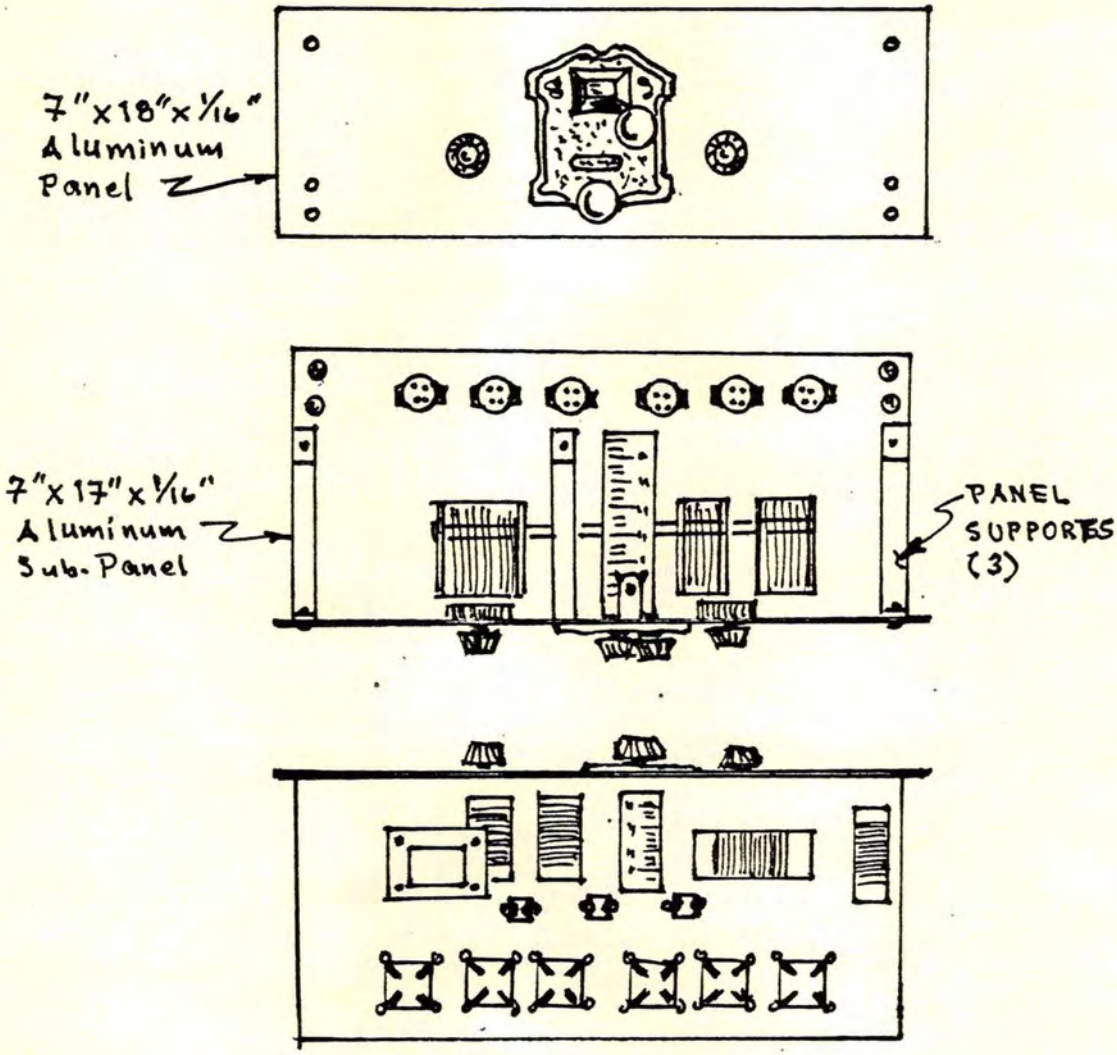

BOTTOM VIEW

(2) RF STAGES
SLF Variables

DETECTOR
Coils = 1½"ø

(2) R-C AF STAGES

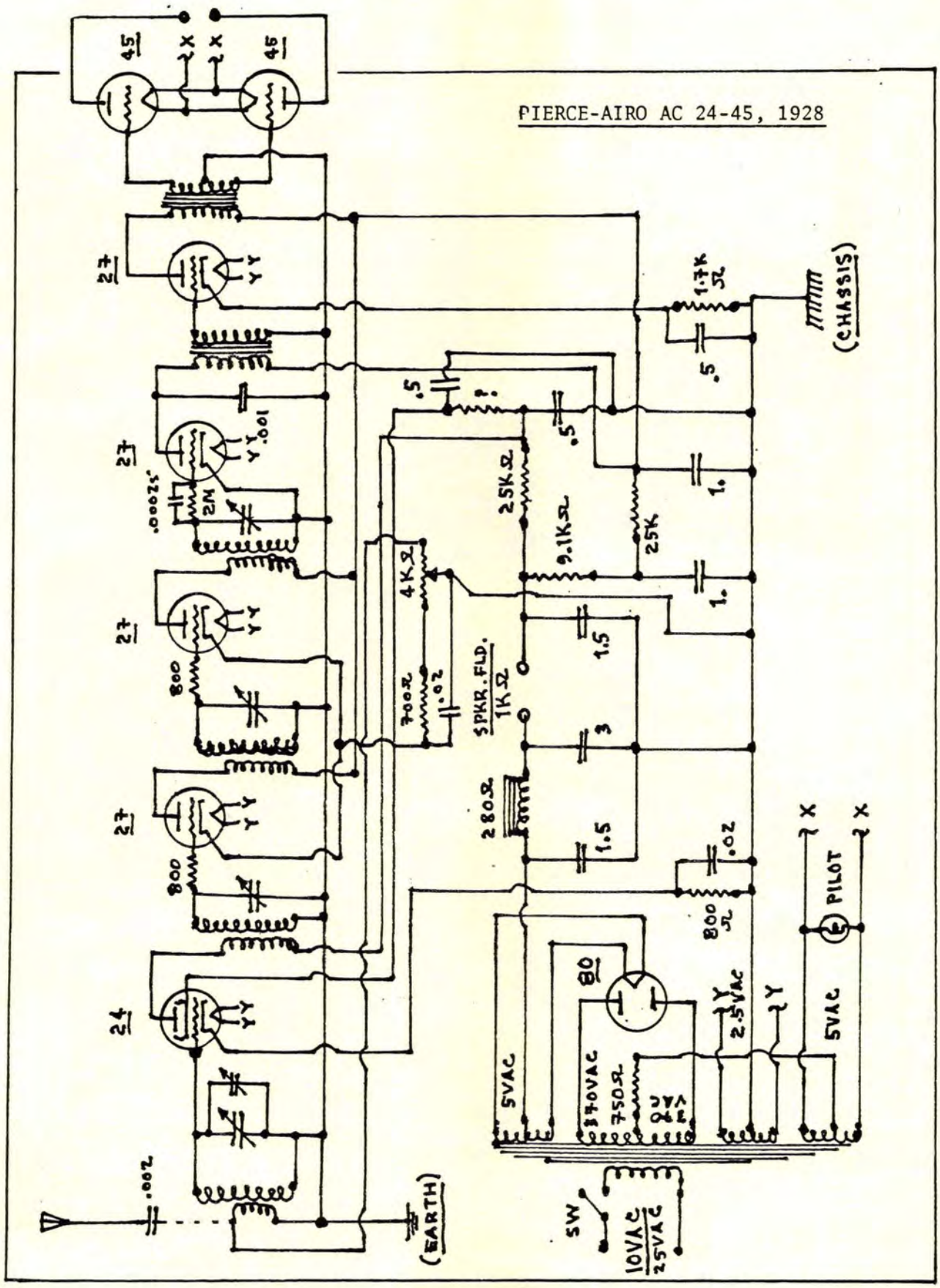
PIERCE-AIRO AC 24-45, 1928
45
45
X
X
27
27
27
27
27
24
.0002
2M
.001
800
800
.002
(EARTH)
.5
.5
.5
1.
1.
1.5
1.5
3
.02
4KΩ
700Ω
SPKR. FLD.
1KΩ
280Ω
25KΩ
9.1KΩ
25K
1.7K Ω
(CHASSIS)
80
5VAC
370VAC
750Ω
2.5VAC
5VAC
800 Ω
PILOT
X
X
SW
10VAC
25VAC

PORTABLE CONFIGURATIONS

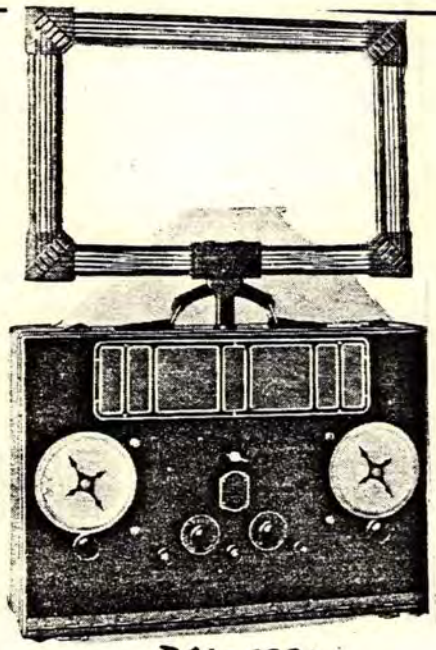

RCA- 1926

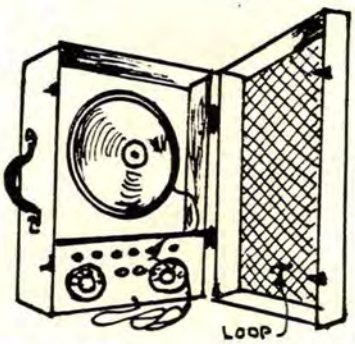

PRESSLEY-SANGAMO
PORTABLE - 1925-$135
(Rossiter, Tyler, McDonald, NYC)

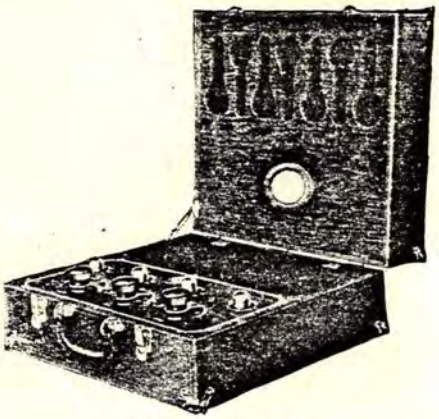

OZARKA-1926

R.C.A
1926

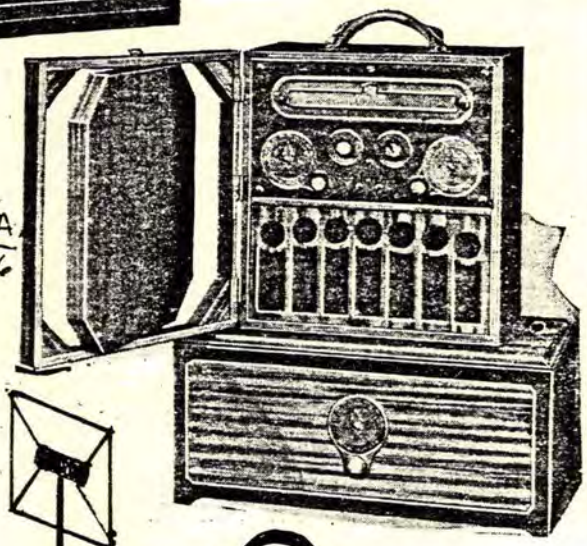

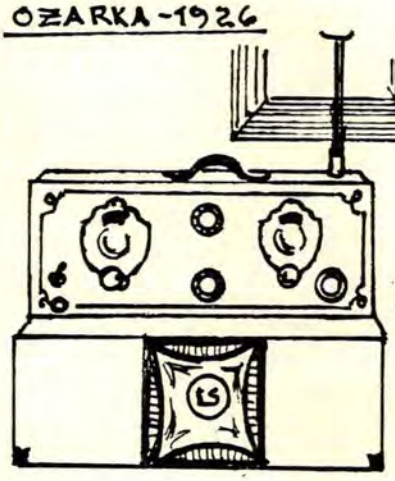

KEMPER
1927

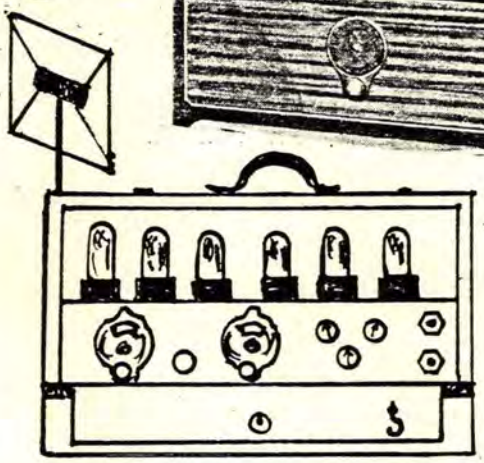

"RAMBLER SIX" PORTABLE
Am. Interstate
(1926 - $90 - 25#)

POWERTONE UNIVERSAL PORTABLE, 1933; Kit $9

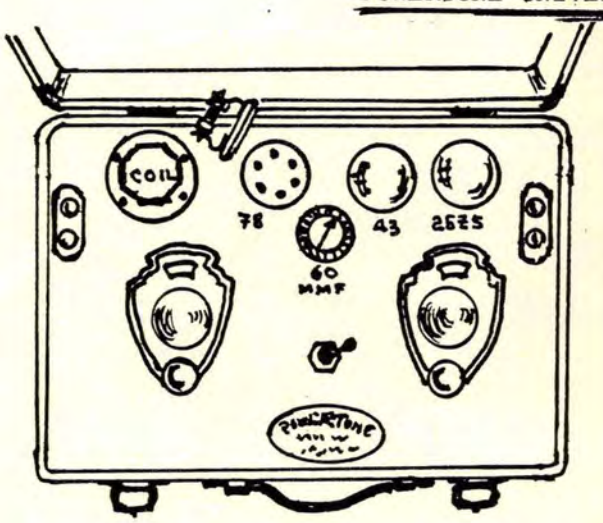

ANY COMMERCIAL 2-WINDING SW. COILS MAY BE USED: ORIGINAL COILS WERE TRY-MO, WHO KITTED THIS SET.

AC OR DC MAY BE USED.

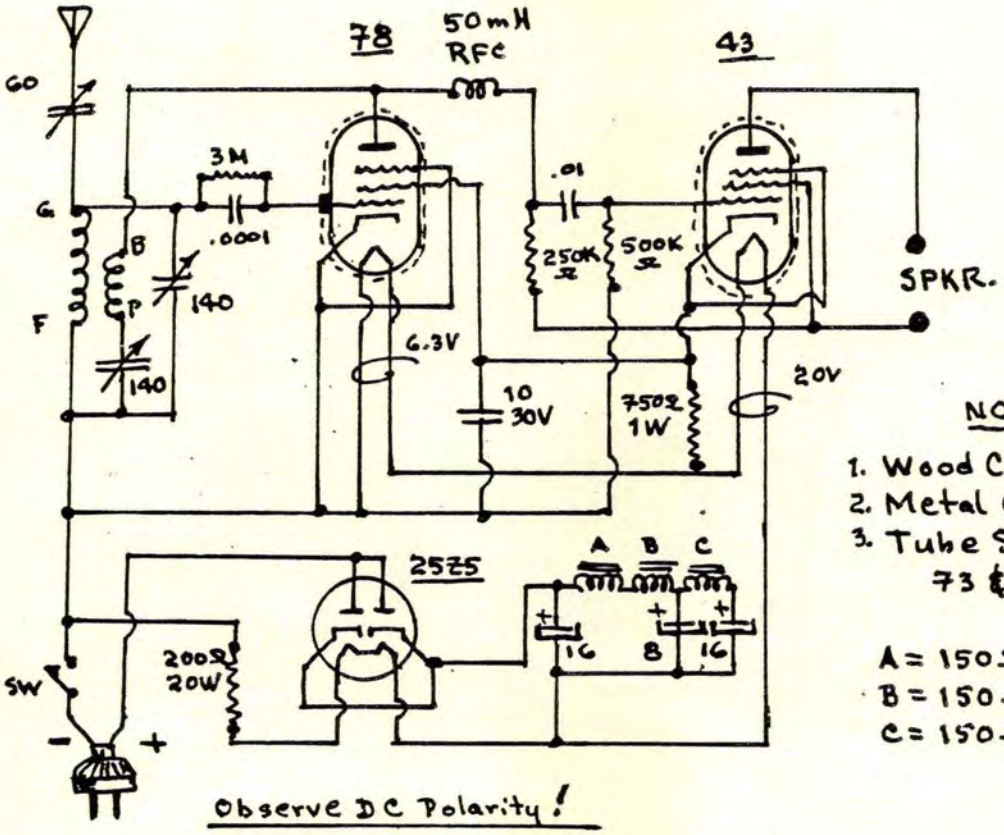

Observe DC Polarity!

NOTES

1. Wood Carrying Case.
2. Metal Chassis.
3. Tube Shields on 73 & 43 Tubes.

A = 150Ω
B = 150Ω
C = 150Ω
} 30H ea.

"POWERTONE" (BRUNO) RECEIVER, 1926/1927
(Sht. 1)

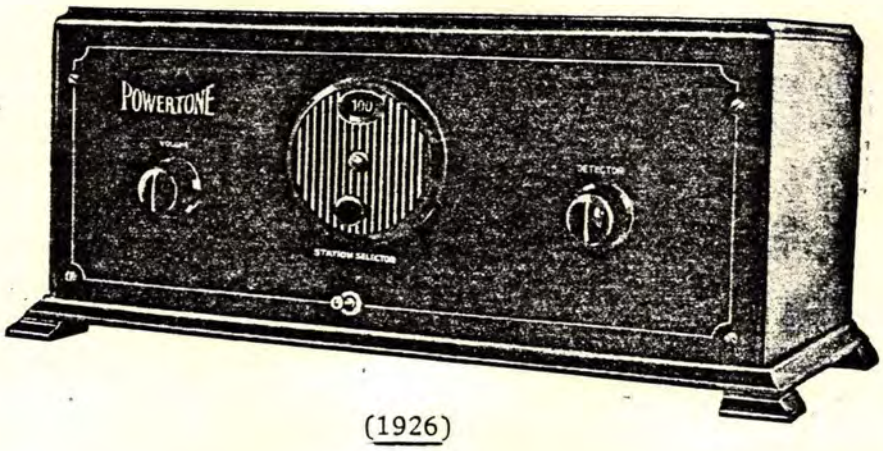

(1926)

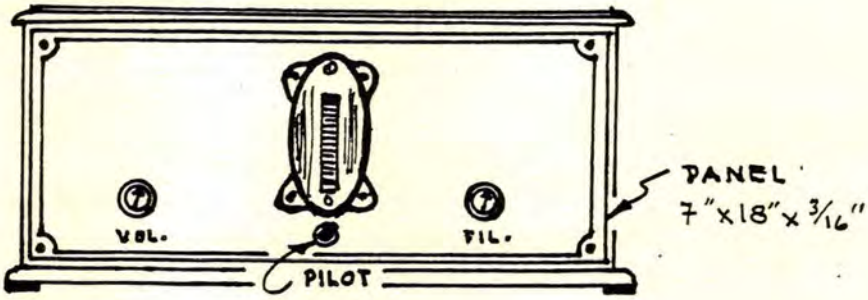

(1927)

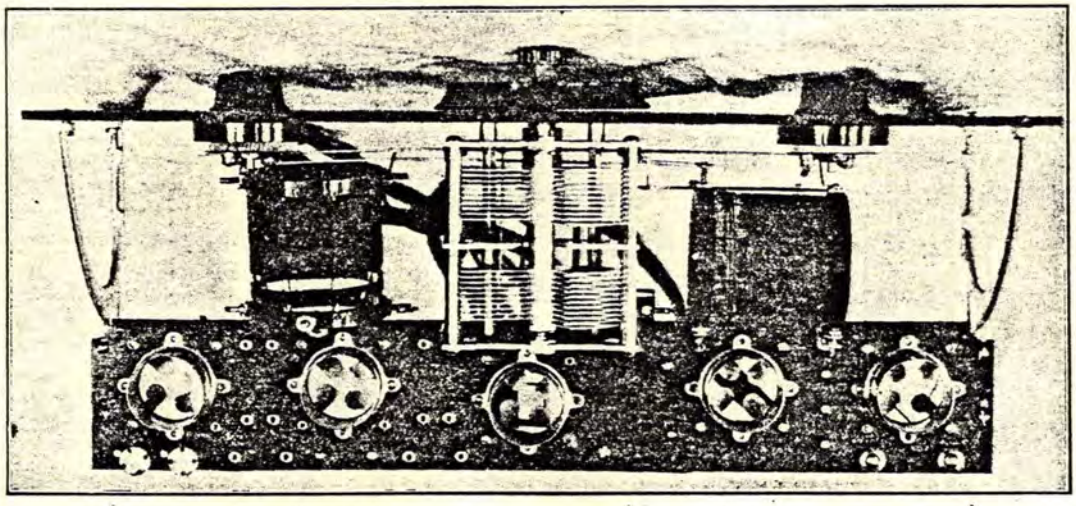

(SWC 11-36)
(RH 4-26)
(RW 8-20-27) (38)

BRUNO "POWERTONE" RCVR., 1926/1927;Sht.2

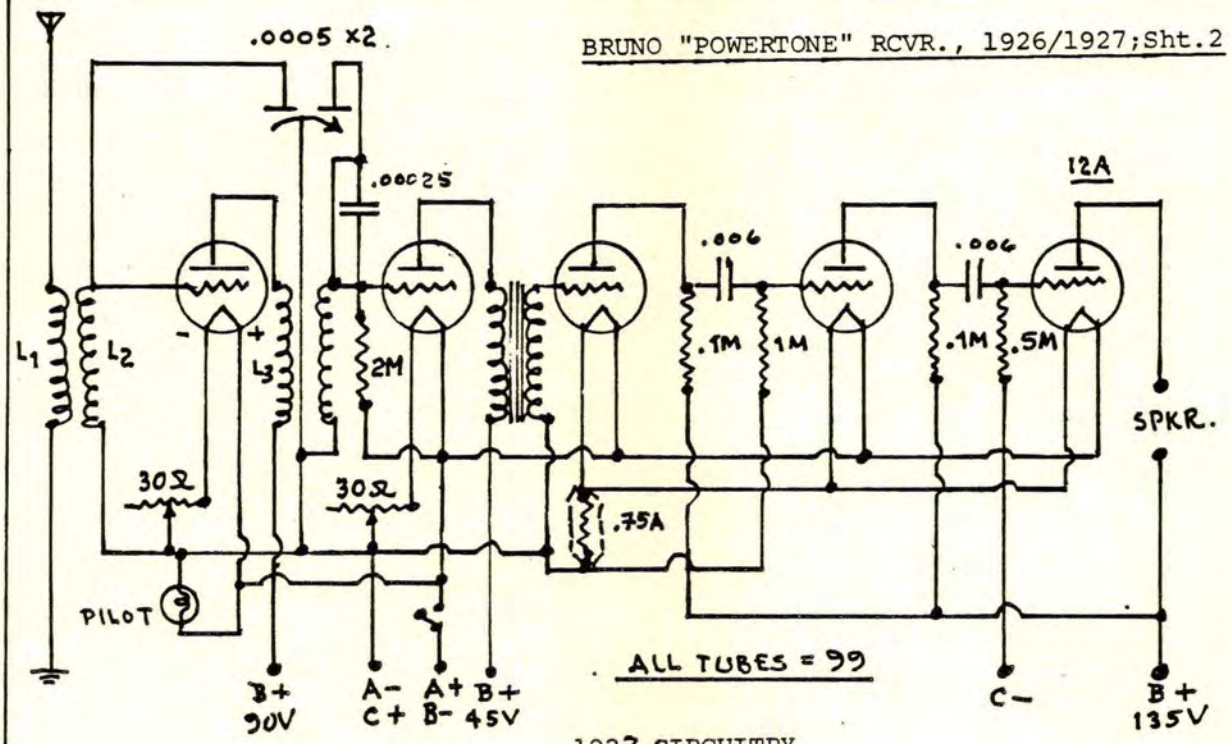

1927 CIRCUITRY

Coil Forms = 2½" Ø x 2" (Bruno #99 coil set used originally.)
Separation Between L1 & L2 = 3/8"; L3 & L4 separation = ¼".
L1 - 10T #24 DCC; L2 = 52T #24 DCC. L3 & L4 same.

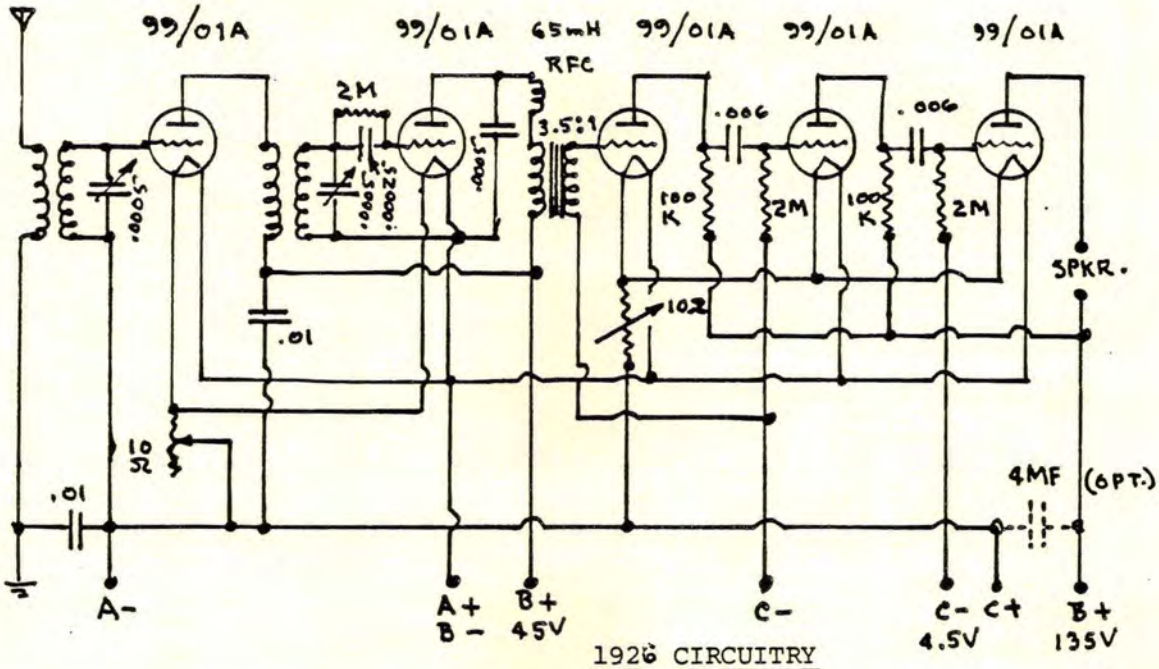

1926 CIRCUITRY

PRESSLEY-SANGAMO PORTABLE SUPER-HET, 1925

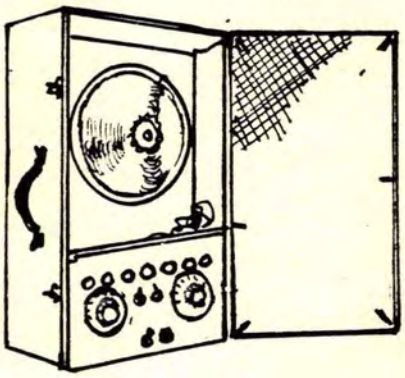

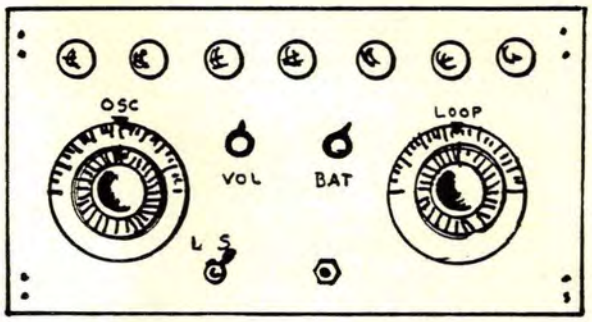

PANEL DETAILS

(2) REMLER TWIN-ROTOR VARIABLES.
99 TUBES.
CROSLEY "Musicone" SPEAKER

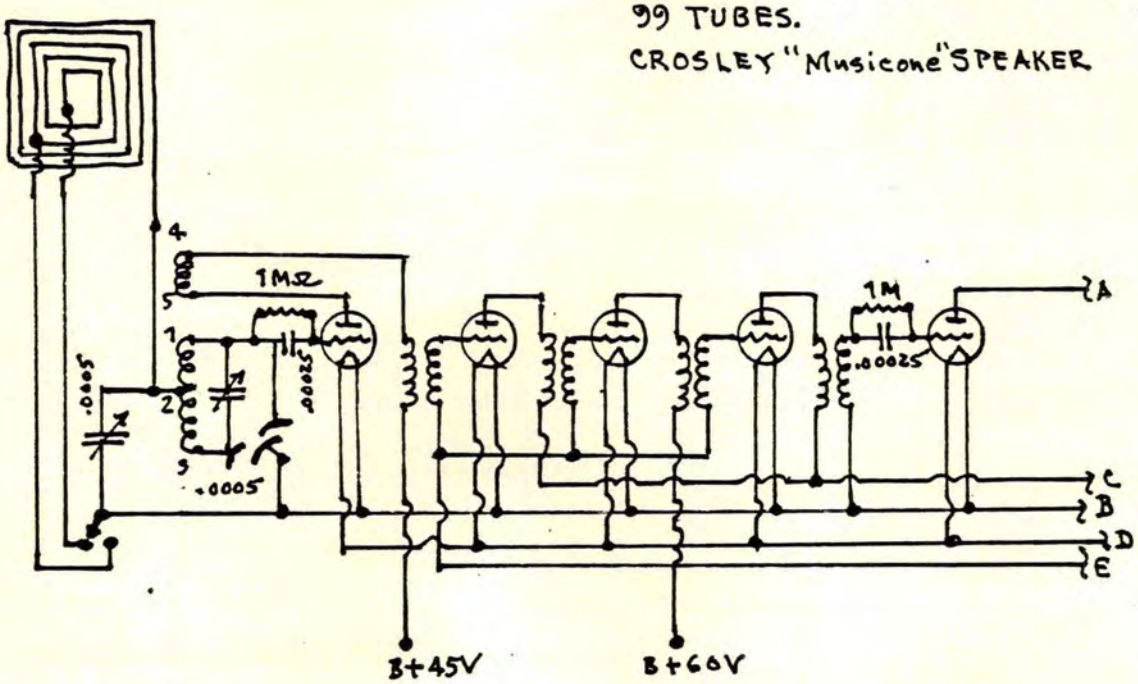

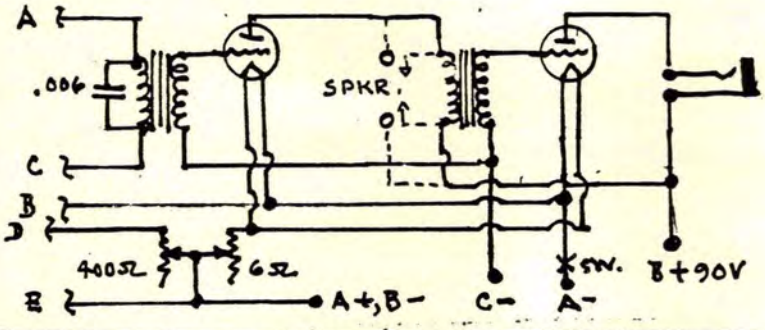

"QUADRAPHASE SUPEROLA" Receiver, 1925; Sht. 1

This set shows the employment of the QUADRAFORMER coils. The set was designed by Gearhart-Schleuter firm in Fresno, California. This set apparently was never popular, even though it was reported with usual enthusiasm by Radio In The Home. Harkness designed a circuit around the coils, but it found no favour with set-builders of the period.

Gearhart, himself, was constantly writing articles about the "NEW Quadraformer...Improvements in the Quadraformer...more Improvements in the Quadraformer...", etc., etc., but he was not very persuasive, for the coils and circuits employing them simply never got off the ground as the employment of the torodial coil was in the ascendency.

The QUADRAPHASE SUPEROLA was the first circuit to utilise as mandatory the then-new Rider "Phasatrol" - a clever device, and which in this circuit was properly employed. Its function is illustrated on page 241. There were a few differences in the SUPEROLA - the RF coil metal can acting as a shield was not grounded, and the rotors of the ganged variables were reversed, so that no two grids had adjacent condenser connexions. The logic of this, according to Gearhart, was that if all three of the grid connexions were in-line, then shielding would be needed. It was a fallacious notion that didn't prove out.

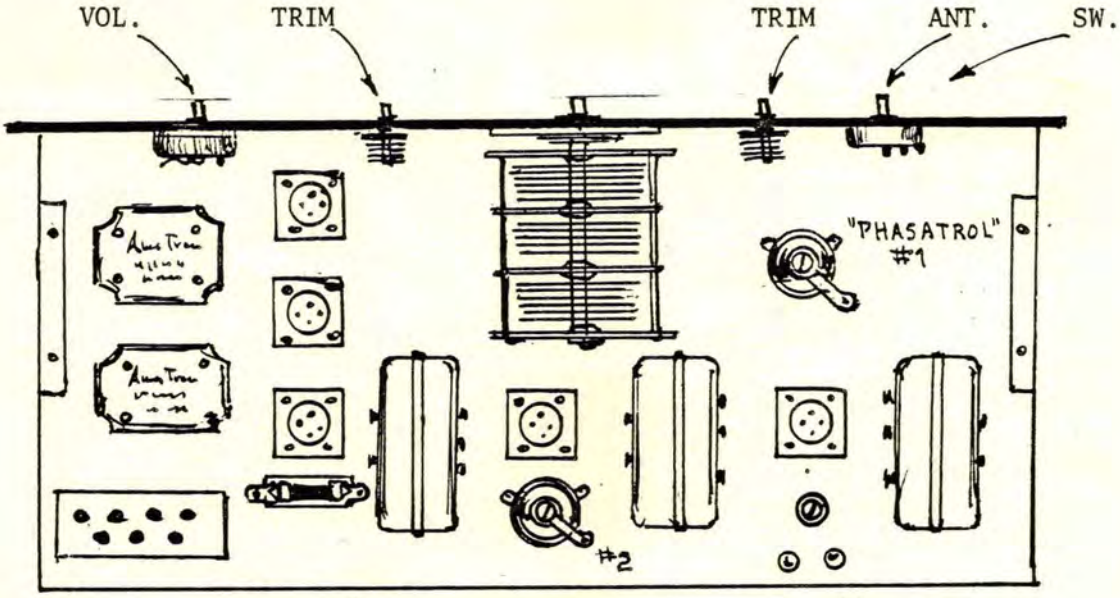

"QUADRAFORMER SUPEROLA" RECVR.:1927
(Sht. 2)

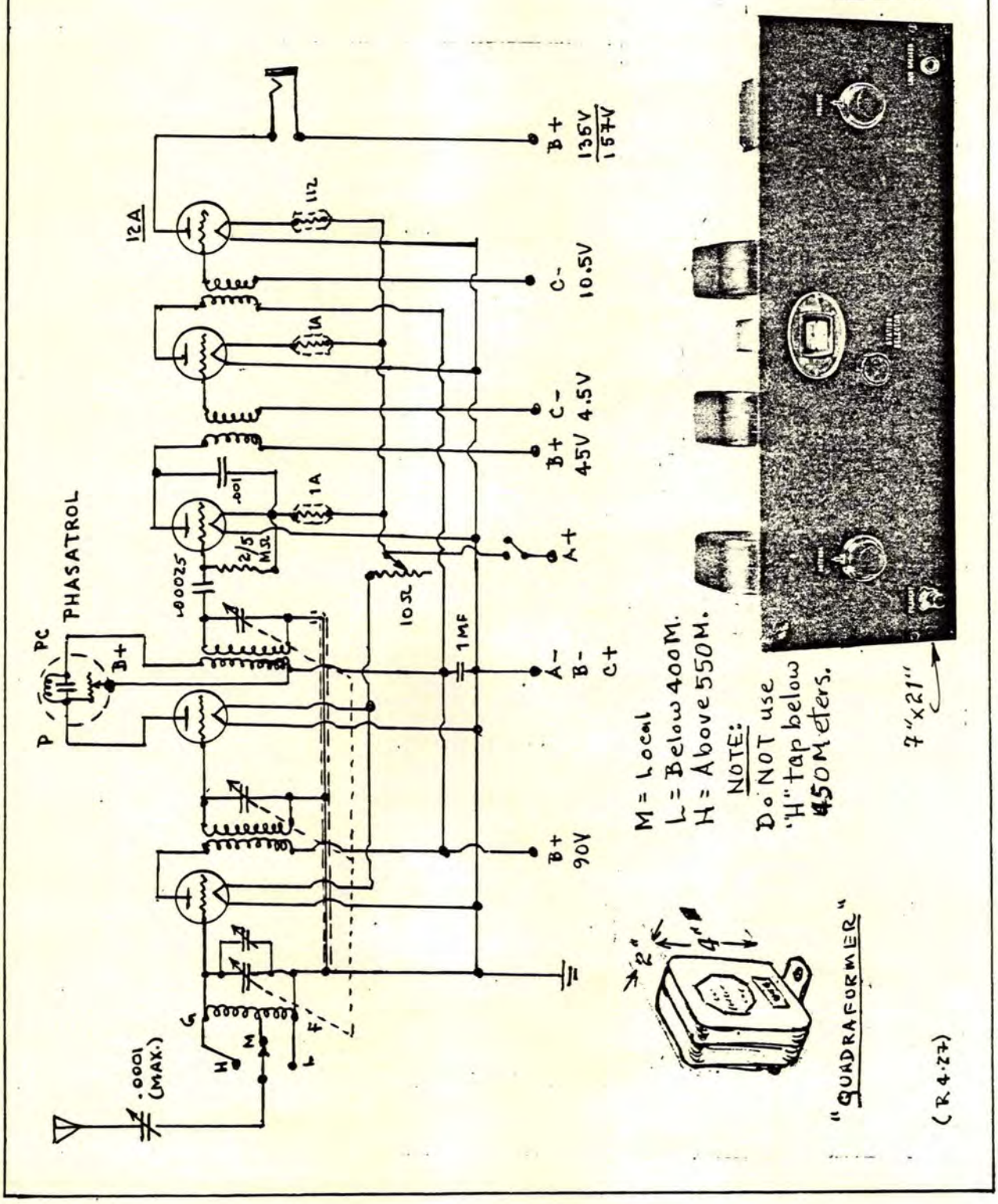

"QUADRAFORMER SUPEROLA" RCVR., 1927
(Sht. 3)

PHASATROL WIRING:

To "P" Terminal on 2nd RF Xfrmr.

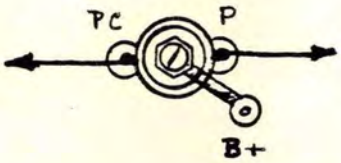

To Plate of 2nd RF Tube

GENERAL NOTES:

1. Note that rotors of the ganged variable are reversed from the usual order.

2. Do NOT ground RF shields.

3. A 300A DET may be used, substituting a 10-ohm resistor for the Amperite.

4. Set-Up: Turn Phasatrol screw fully CW.
   Adjust ANT variable full in.
   Trim variables for best signal.
   Set ANT variable half in.
   Adjust trimmers on variables for maximum signal.
   Open ANT variable until signallessens.
   Tune in another station, and adjust trimmers, if necessary.

5. Phasatrol Adjust:

   Tune in a station around 250 meters.
   Turn VOL up until oscillation occurs.
   Adjust Phasatrol screw until oscillation ceases - about 180°.
   Use a non-magnetic screw-driver.

"QUADRAFORMER SUPEROLA" RCVR., 1927
(Sht. 4)

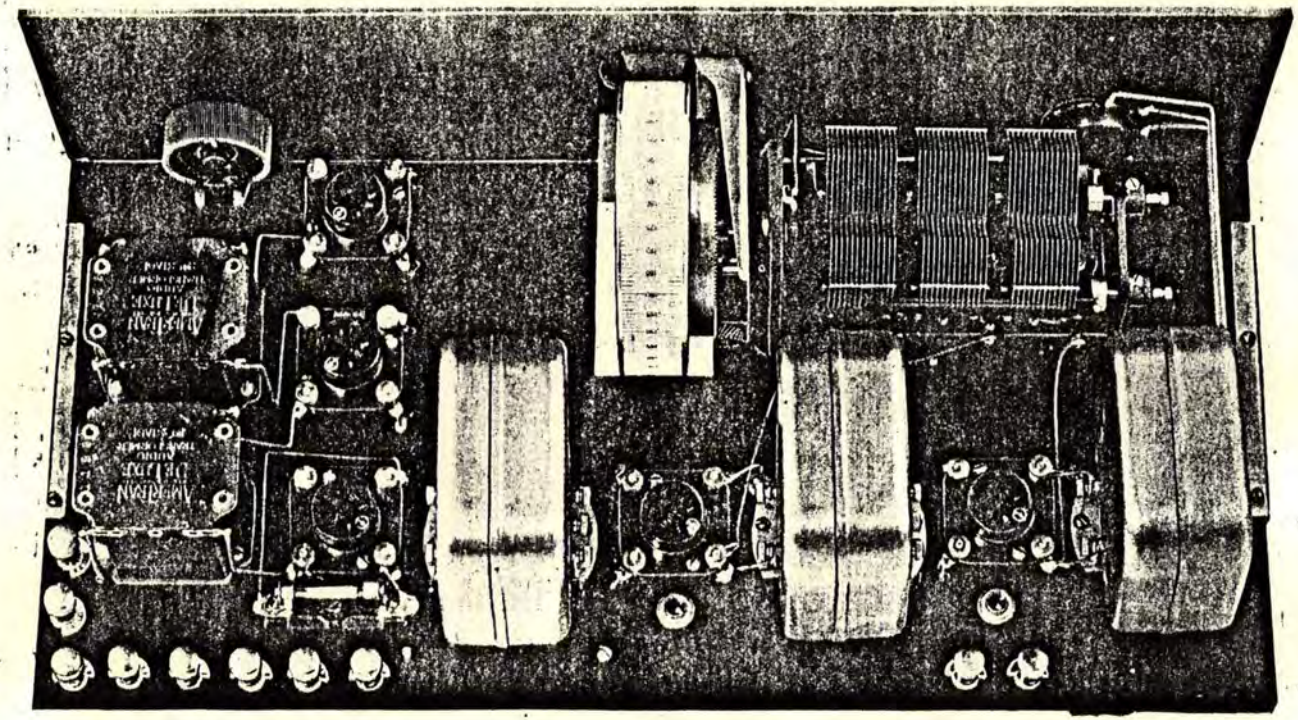

THE LAYOUT ABOVE IS A VARIATION OF THE ORIGINAL "QUADRAFORMER," MADE BY AN UNKNOWN HOME-CONSTRUCTOR. CIRCUITRY IS ESSENTIALLY THE SAME, AND AFTER I GOT IT WORKING PROPERLY, FOUND THAT ITS PERFORMANCE WAS NOT DIFFERENT FROM THE ORIGINAL.

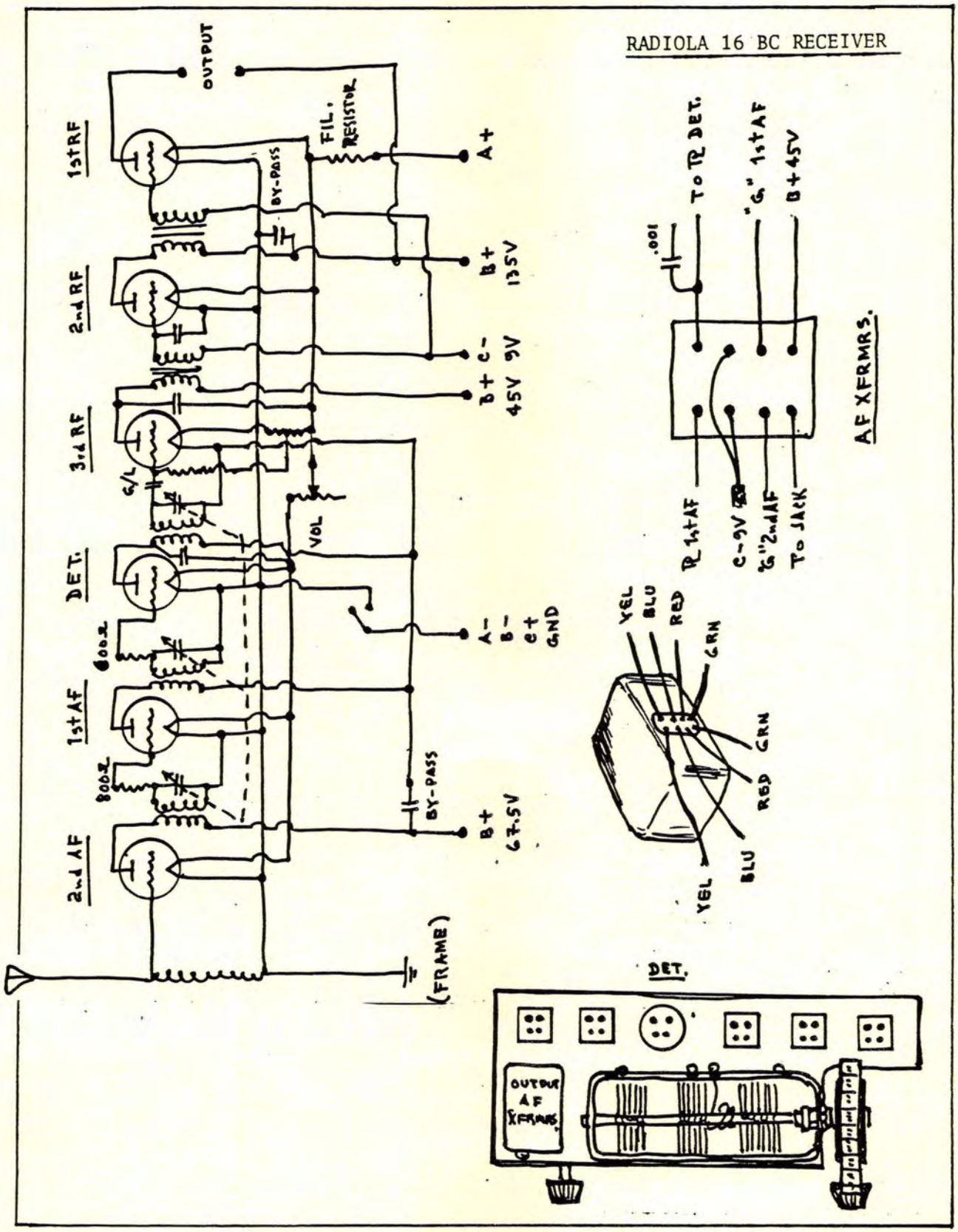
RADIOLA 16 BC RECEIVER
OUTPUT
1st RF
2nd RF
3rd RF
DET.
1st AF
2nd AF
FIL. RESISTOR
BY-PASS
A+
B+ 135V
B+ C- 45V 9V
VOL
A-
B-
C+
GND
B+ 67.5V
(FRAME)
.001
TO PL DET.
"G" 1st AF
B+45V
PL 1st AF
C-9V
"G" 2nd AF
TO JACK
AF XFRMRS.
YEL
BLU
RED
GRN
DET.
OUTPUT AF XFRMRS.

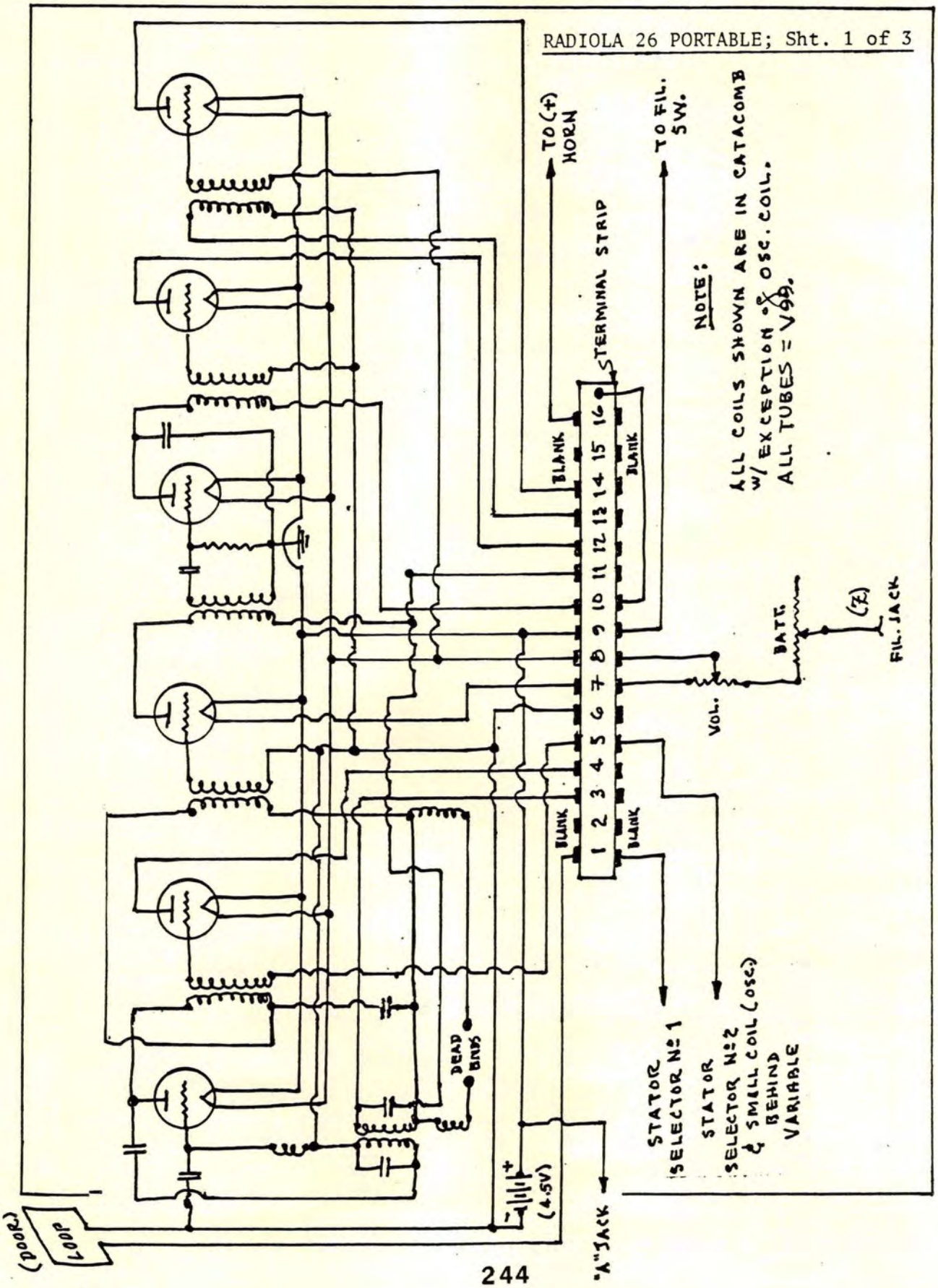
RADIOLA 26 PORTABLE; Sht. 1 of 3
TO (+) HORN
TO FIL. SW.
TERMINAL STRIP
BLANK
BLANK
BLANK
BLANK
1 2 3 4 5 6 7 8 9 10 11 12 13 14 15 16
NOTE:
ALL COILS SHOWN ARE IN CATACOMB
w/ EXCEPTION of OSC. COIL.
ALL TUBES = V99.
BATT.
FIL. JACK
VOL.
STATOR SELECTOR Nº 1
STATOR SELECTOR Nº 2
& SMALL COIL (OSC.) BEHIND VARIABLE
DEAD BIND
(4.5V)
"X" JACK
LOOP
(LOOP)

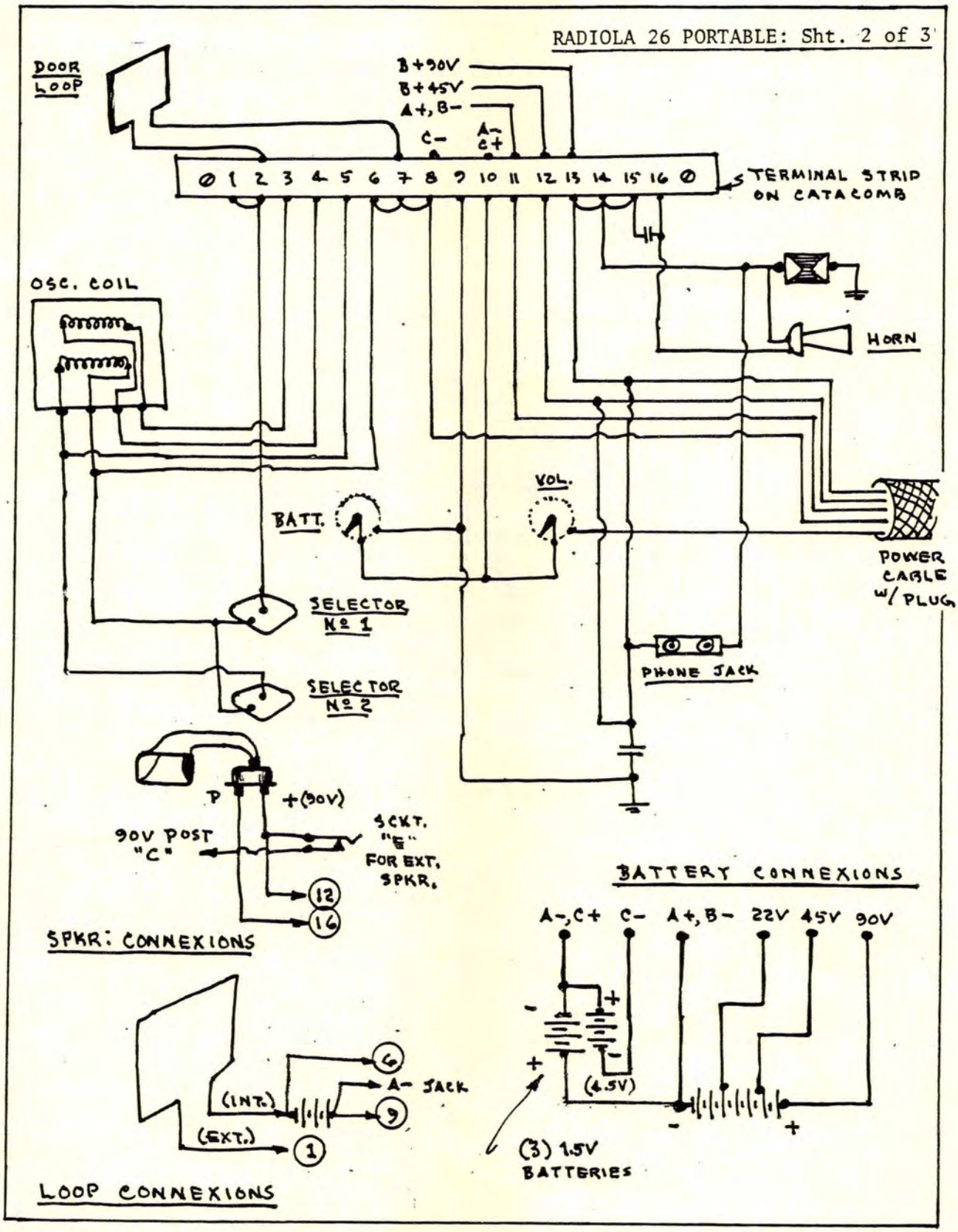
RADIOLA 26 PORTABLE: Sht. 2 of 3
DOOR LOOP
B+90V
B+45V
A+, B-
C-
A-
C+
0 1 2 3 4 5 6 7 8 9 10 11 12 13 14 15 16 0
TERMINAL STRIP ON CATACOMB
OSC. COIL
HORN
VOL.
BATT.
POWER CABLE W/ PLUG
SELECTOR Nº 1
SELECTOR Nº 2
PHONE JACK
P
+(90V)
90V POST "C"
SCKT. "E" FOR EXT. SPKR.
12
16
SPKR. CONNEXIONS
BATTERY CONNEXIONS
A-,C+ C- A+,B- 22V 45V 90V
(4.5V)
(3) 1.5V BATTERIES
6
A- JACK
(INT.)
9
(EXT.)
1
LOOP CONNEXIONS

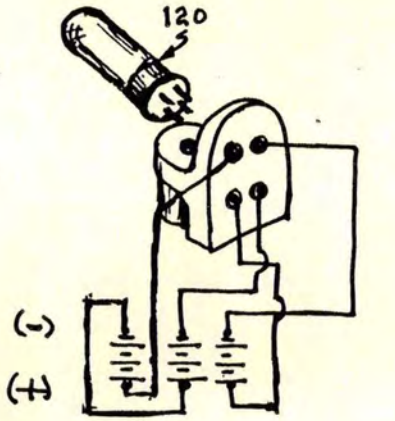

(3) 22.5V "C" BATTERIES
UR-556 ADAPTER WAS AVAILABLE FOR 120 TUBE IN LAST STAGE.

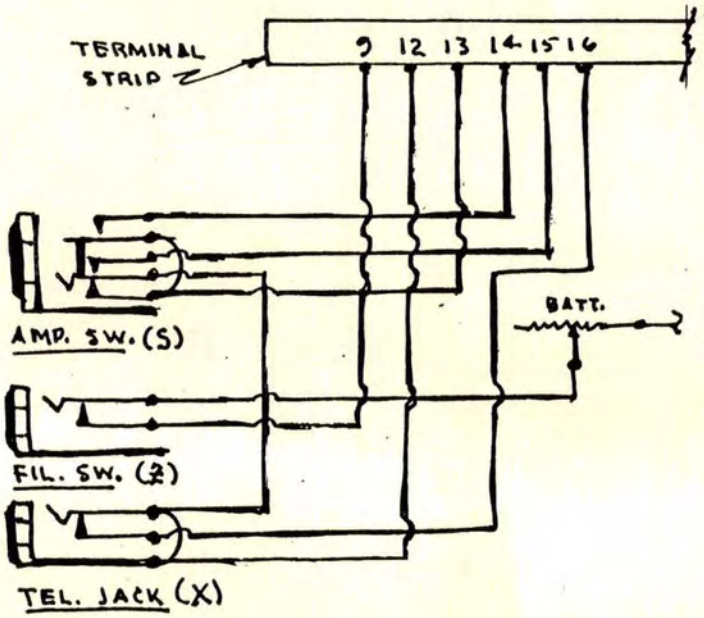

NOTES

1. RADIOLA 26 CATACOMB CONNEXIONS ARE REVERSED FROM ALL OTHER RCA 6-TUBE CATACOMBS! Do Not attempt to interchange them.

2. Horn spekaer is at all times connected to 2nd AF stage.

3. Phone-tip pin jacks are connected to 1st AF stage.

4. No stage-change switch was employed.

RADIOLA 26 PORTABLE: Sht. 3 of 3

RCA "CATACOMB" NOTATIONS FOR MODEL VIII & SUPER-HETERODYNE; 1926 (Sht. 1

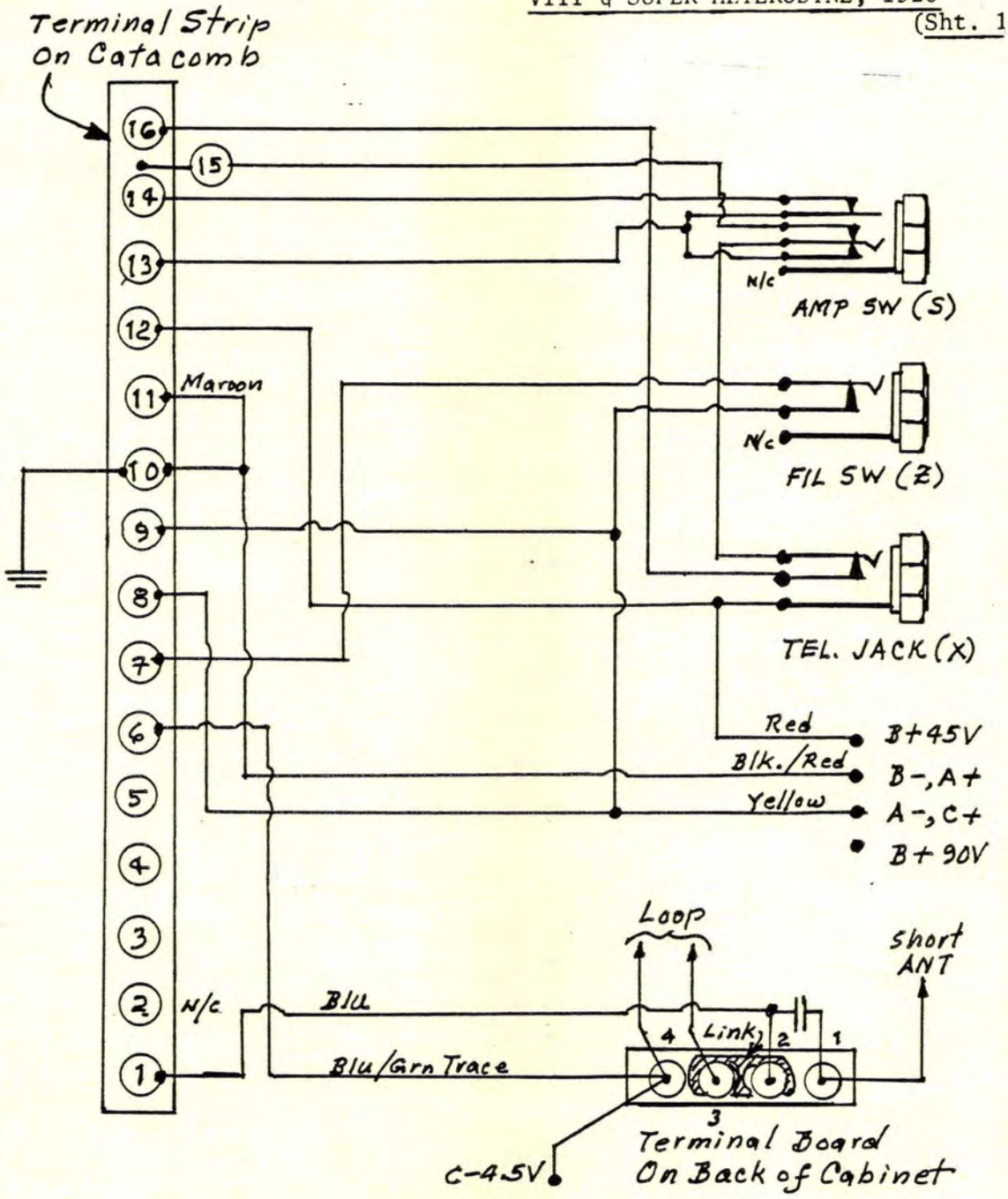

RCA "CATACOMB" NOTATIONS FOR MODELS VIII & SUPER-HETERODYNE, 1926;Sht.2

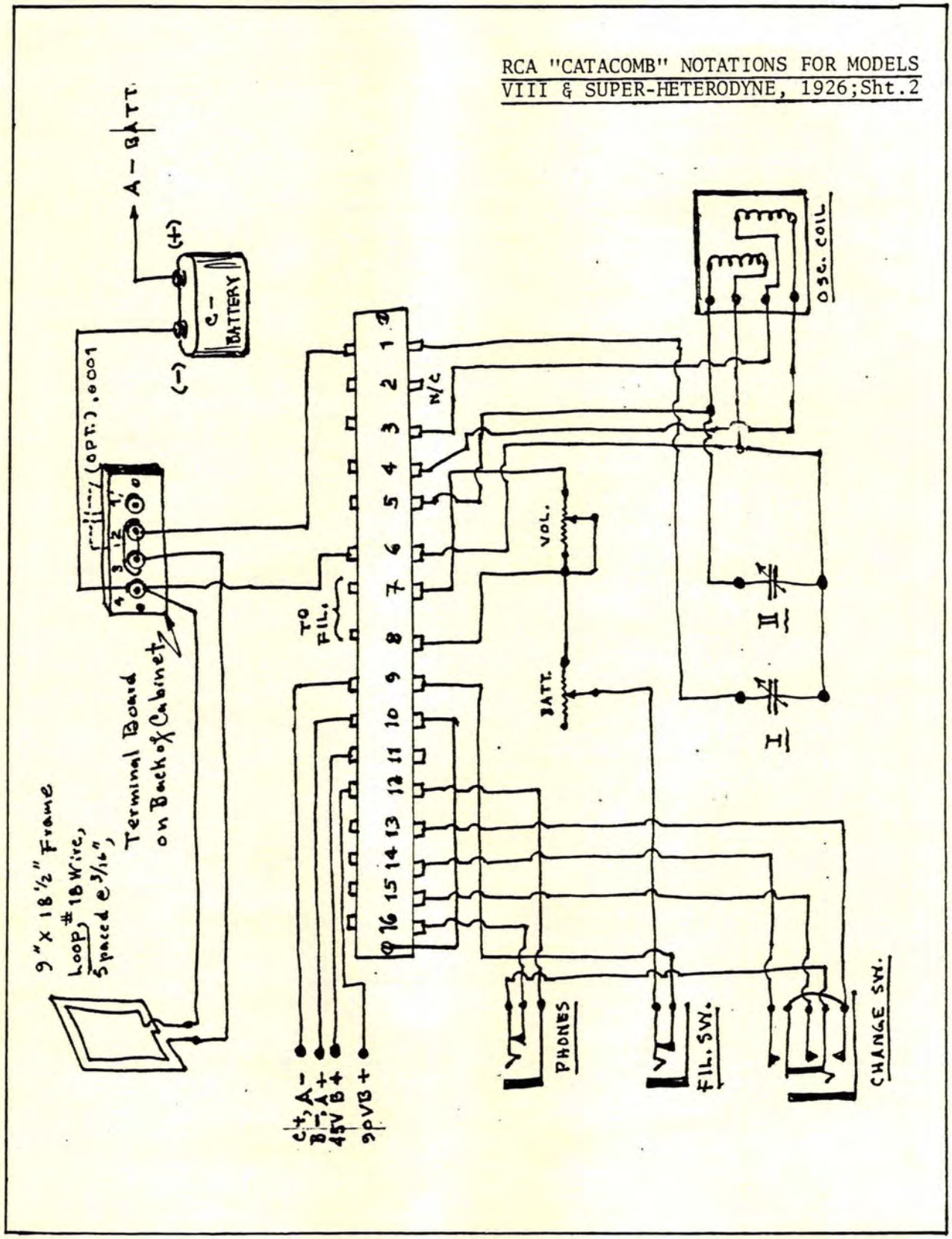

RADIOLA SUPER-HETERODYNE, 1926; (Sht. 1)

NOTE: Also applicable to RCA Model VIII (AR-810) & AR-812. Both used the same catacomb.

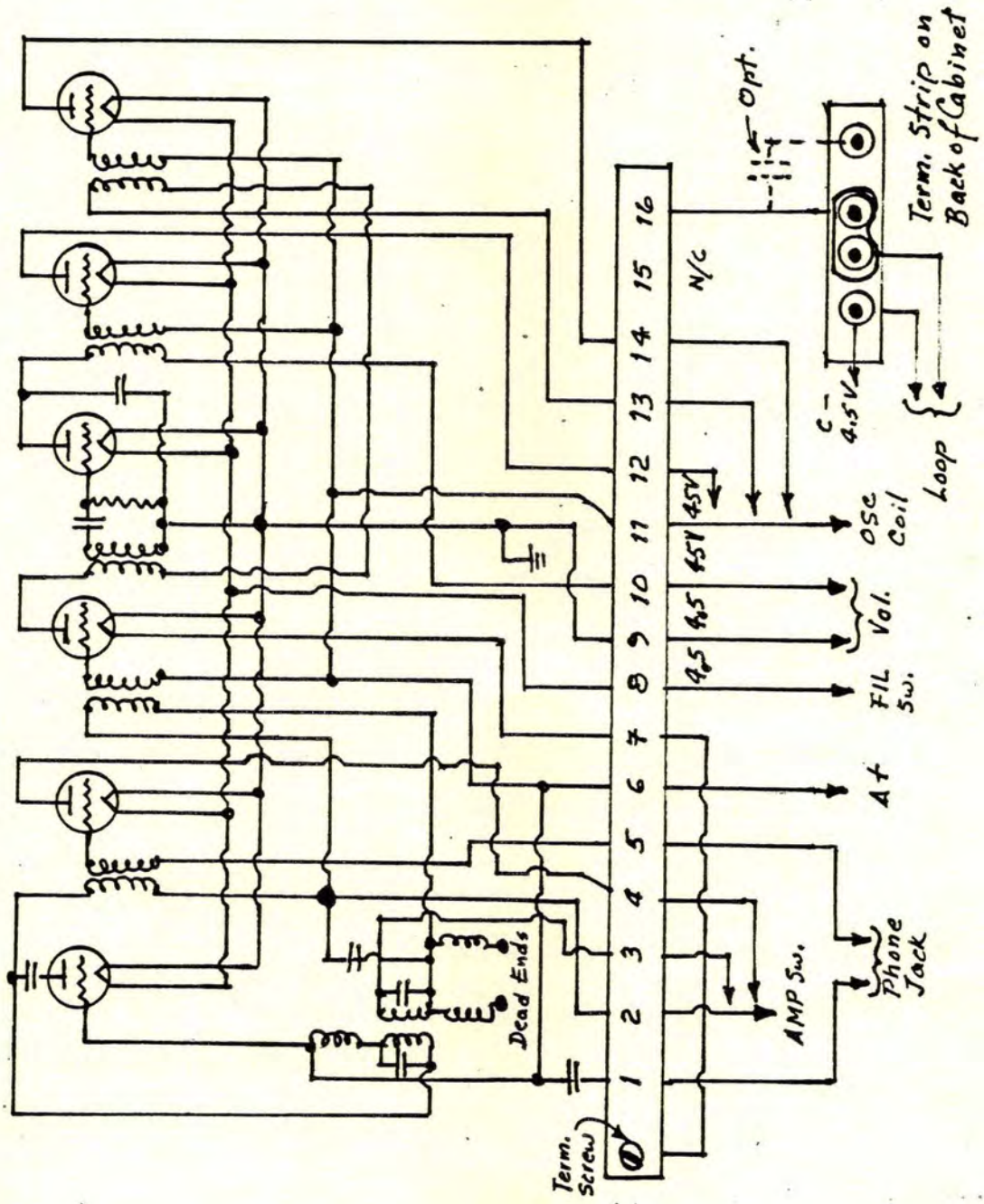

RADIOLA SUPER-HETERODYNE, 1926; Sht. 2

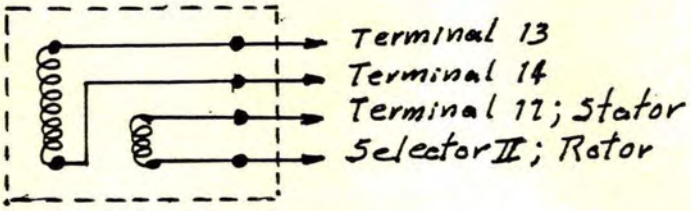

OSC COIL DET.

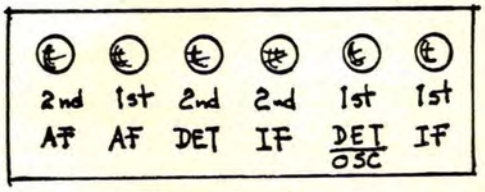

TUBE LAYOUT

NOTES:

1. A standard RF xfrmr. may be used instead of a loop. ANT and GND connected to PRI; SEC to Posts 2 and 4 on Terminal Board. Link should be open. Xfrmr. should be for a .0005 MFD variable. Connecting Post 1 to ground will sometimes help.

2. See RADIO-CRAFT, April, 1930, for Data Sheet.

3. Circuit uses the 2nd Harmonic:

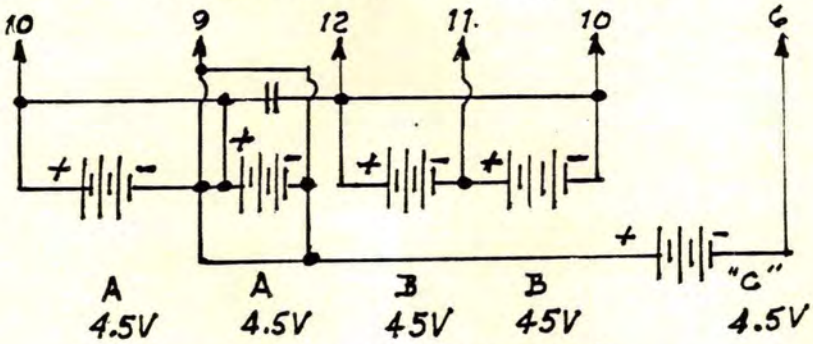

9V "A Supply required.
The .006 cap. may be replaced with 1 or 2 MF.
Posts 9 and 16 do not connect to catacomb.
Terminal board is on back of cabinet, inside.

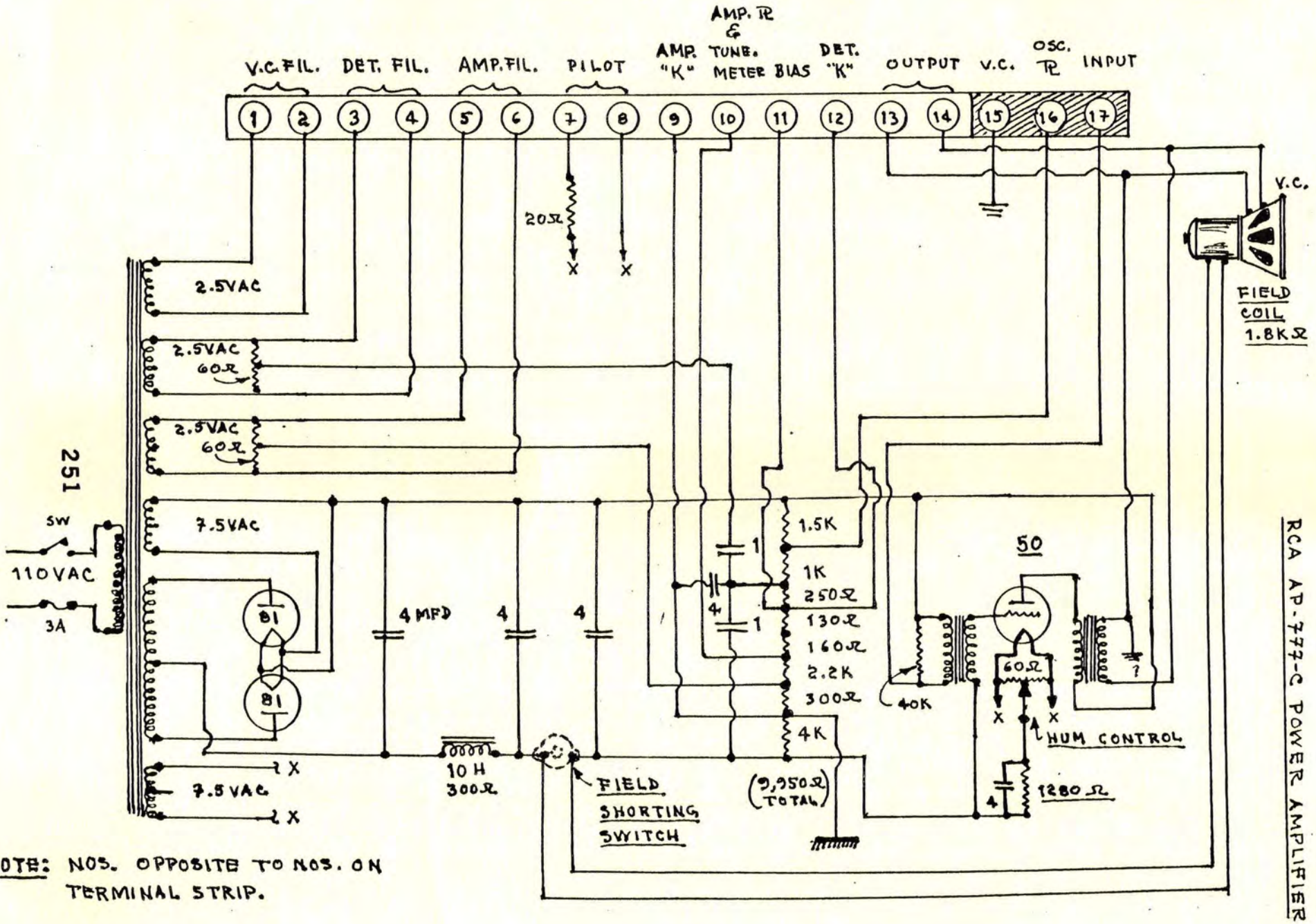

NOTE: NOS. OPPOSITE TO NOS. ON TERMINAL STRIP.

RCA AP-777-C POWER AMPLIFIER

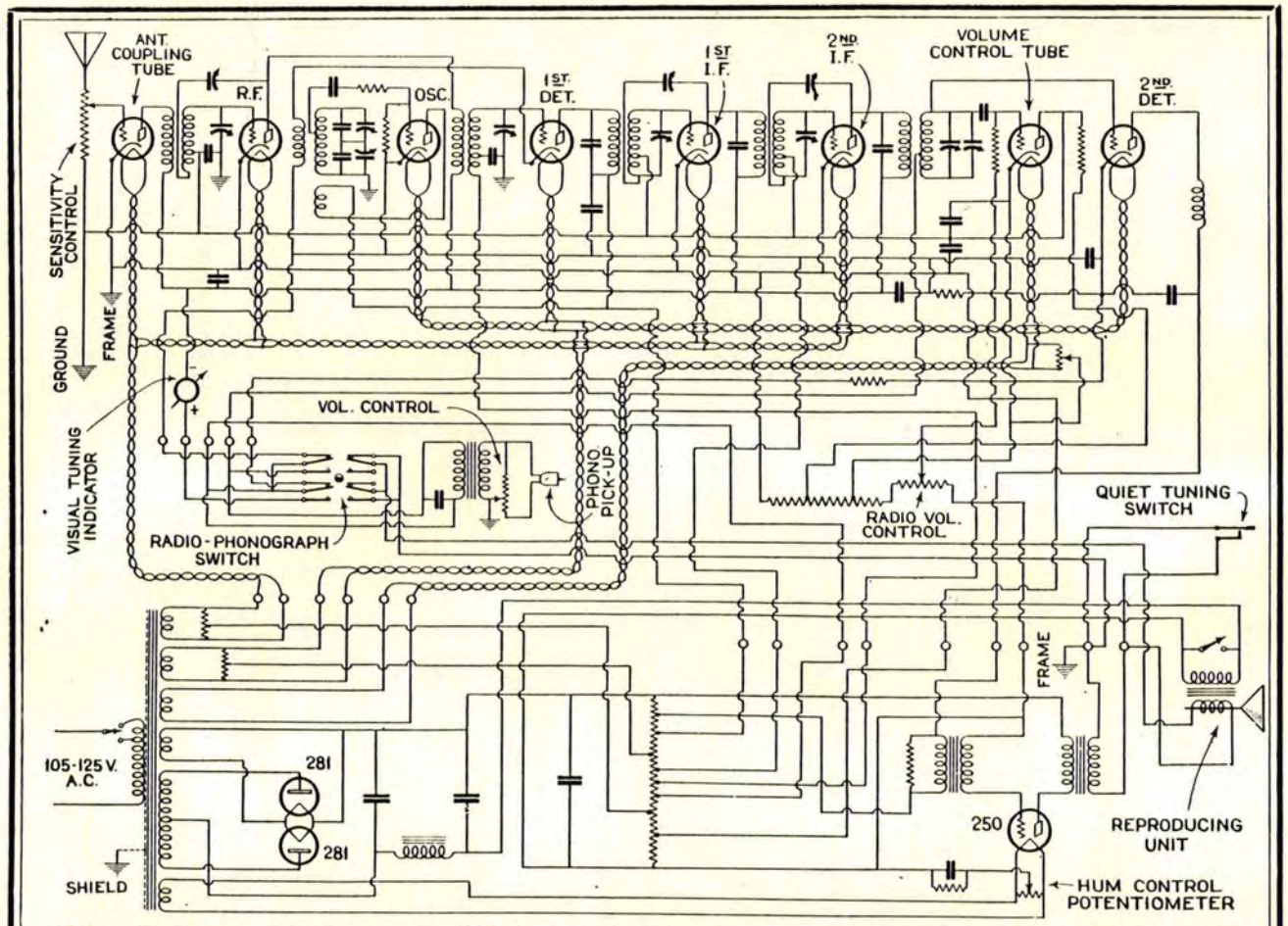

Schematic diagram of the Radiola 64, which is a combination radio and phonograph. The notable features are: automatic volume control; a visual tuning indicator in the form of a milliammeter in the plate circuit of the volume control tube; a power detector, feeding directly into the 250 tube; an untuned input circuit and lastly, a quiet tuning switch. Note that only the heater-type tubes are used in the receiver circuit, which, incidently, is fundamentally the same as the Radiola 60 superhetrodyne.

RADIOLA 64 NOTATION

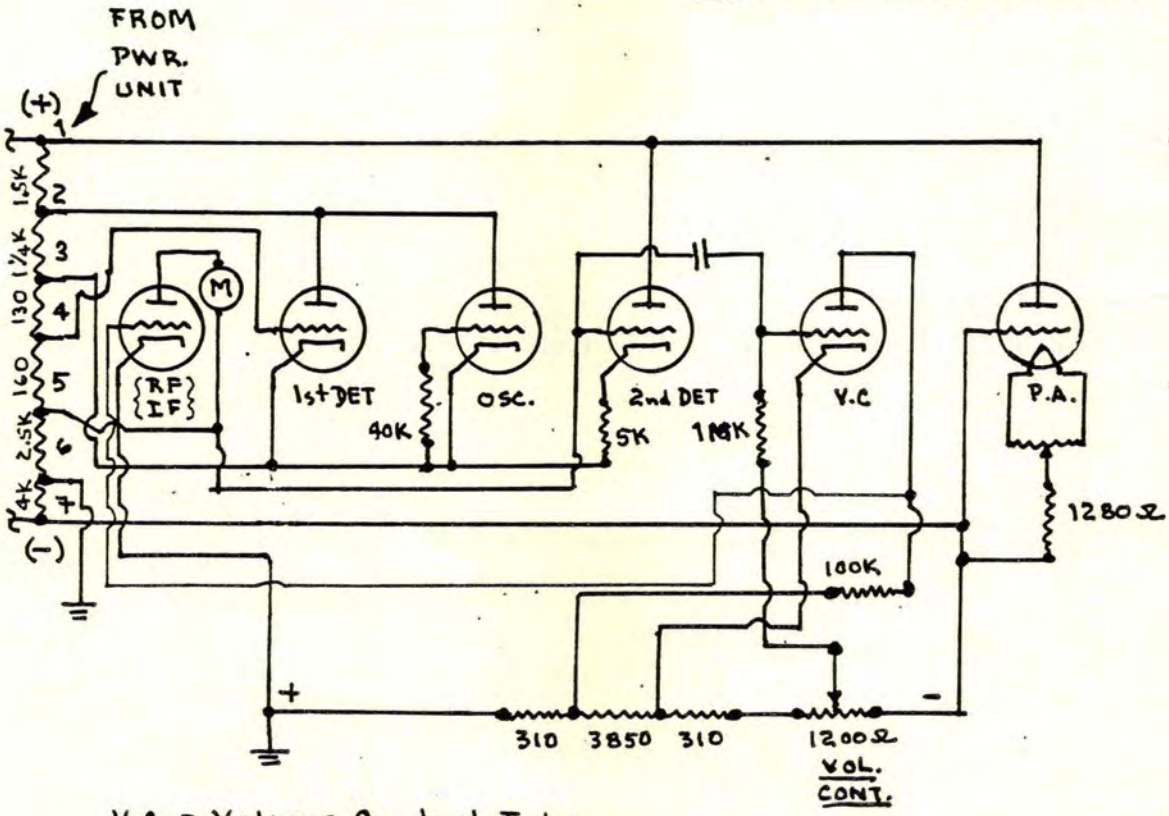

V.C. = Volume Control Tube.
M = Meter.
P.A. = Power Amplifier Tube.

(RF & IF TUBES SHOWN AS ONE TUBE. SEE ALSO PAGE 252.)

There were two variants of the Radiola 64 circuit, different enough to where they were not interchangeable. This format will not permit detailed schematics, so if you are restoring a Radiola 64, either table, console, or phonograph-combination, write to The Editorial Group, Ltd., and a large scale schematic will be sent to you. The Electrola Model 764 is also the Radiola 64.

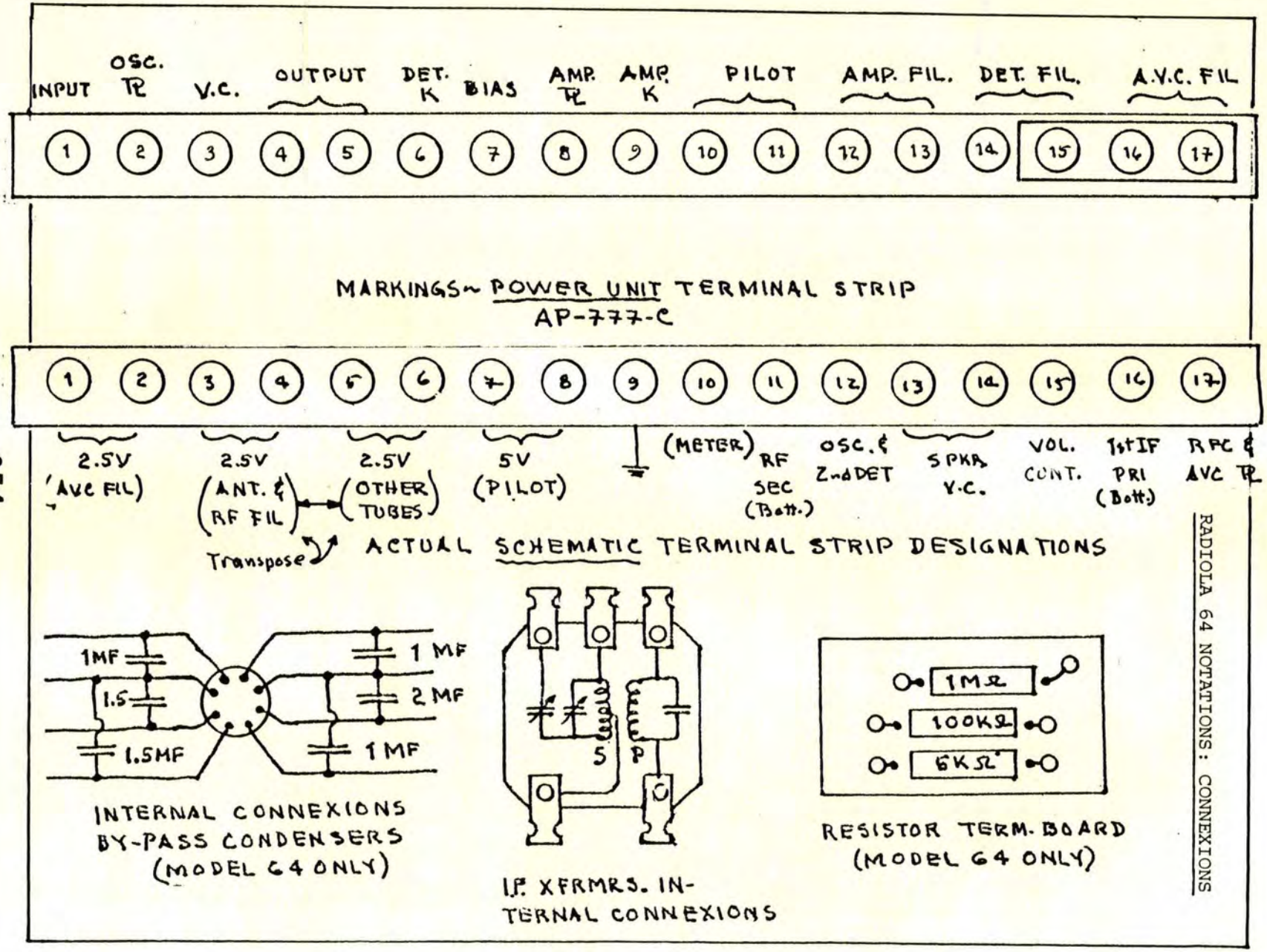
INPUT
OSC. TR
V.C.
OUTPUT
DET. K
BIAS
AMP. TR
AMP. K
PILOT
AMP. FIL.
DET. FIL.
A.V.C. FIL
1 2 3 4 5 6 7 8 9 10 11 12 13 14 15 16 17
MARKINGS~ POWER UNIT TERMINAL STRIP
AP-777-C
1 2 3 4 5 6 7 8 9 10 11 12 13 14 15 16 17
2.5V (AVC FIL)
2.5V (ANT. & RF FIL)
2.5V (OTHER TUBES)
5V (PILOT)
(METER)
RF SEC (Bott.)
OSC. & 2nd DET
SPKR. V.C.
VOL. CONT.
1st IF PRI (Bott.)
RFC & AVC TR
Transpose
ACTUAL SCHEMATIC TERMINAL STRIP DESIGNATIONS
1MF
1.5
1.5MF
1 MF
2 MF
1 MF
INTERNAL CONNEXIONS
BY-PASS CONDENSERS
(MODEL 64 ONLY)
S
P
I.F. XFRMRS. INTERNAL CONNEXIONS
1MΩ
100KΩ
6KΩ
RESISTOR TERM. BOARD
(MODEL 64 ONLY)
RADIOLA 64 NOTATIONS: CONNEXIONS

RAULAND (ALL-AMERICAN) "SUPER-FINE" 30KC SUPER-HET, 1926. (Sht. 1)

After establishing a solid reputation for producing staid and dependable AF transformers, Rauland ventured into designing one and two-tube sets - reflex, super-reflex, TRF. The set detailed herein was their best effort to climb aboard the super-heterodyne band-wagon that was beginning to roll in the mid-Twenties. Their transformers were actually the only contribution they could make, even though you will spot a few "peculiarities" in the circuit over-leaf. The set might be considered as the "experimental" model of the subsequent Remler 45KC super-heterodyne - which, incidentally, was a better performing unit. The "Super-Fine" 30KC super-het was their first and last effort to get into the big league of set manufacturers, and as such, does have a certain historical validity.

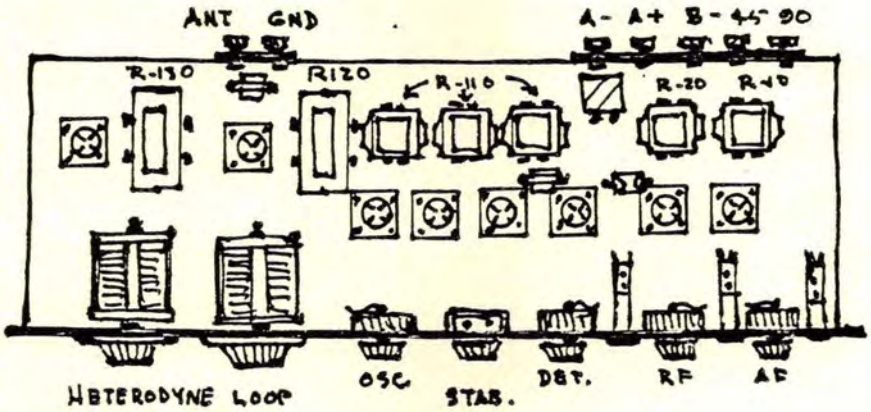

The .0005 MFD variables were Bremer-Tully units, and consisted of 23 plates, each.

The following Rauland items were offered as a kit to those desirous of constructing the "Super-Fine", and sold in 1926 for $26:

R-130 = Oscillator Coupler
R-120 = RF Filter
R-110 = IF Transformers
R-20 = AF Transformer
R-10 = AF Transformer

RAULAND "SUPER-FINE" 30KC SUPER-HET, '26
(Sht. 2)

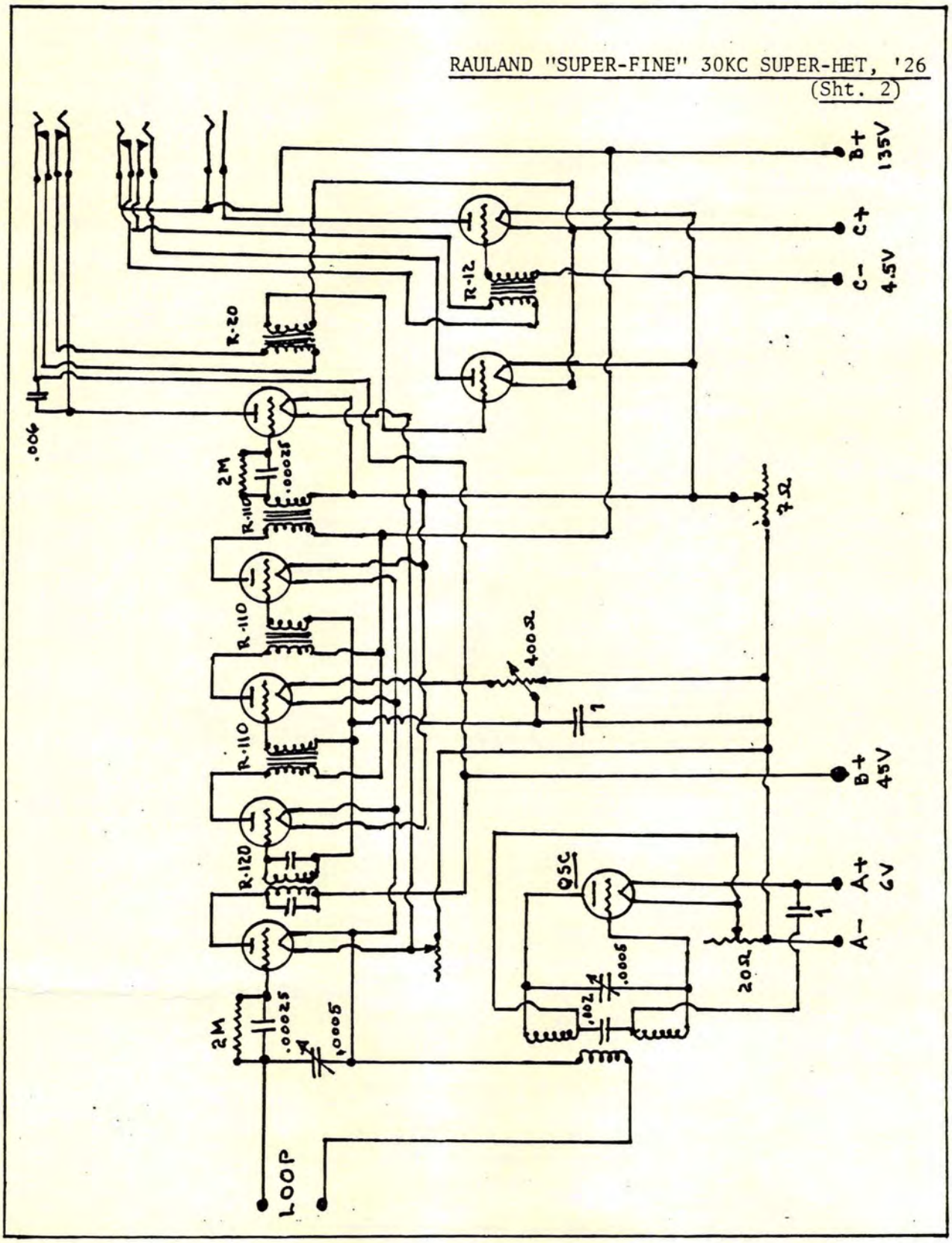

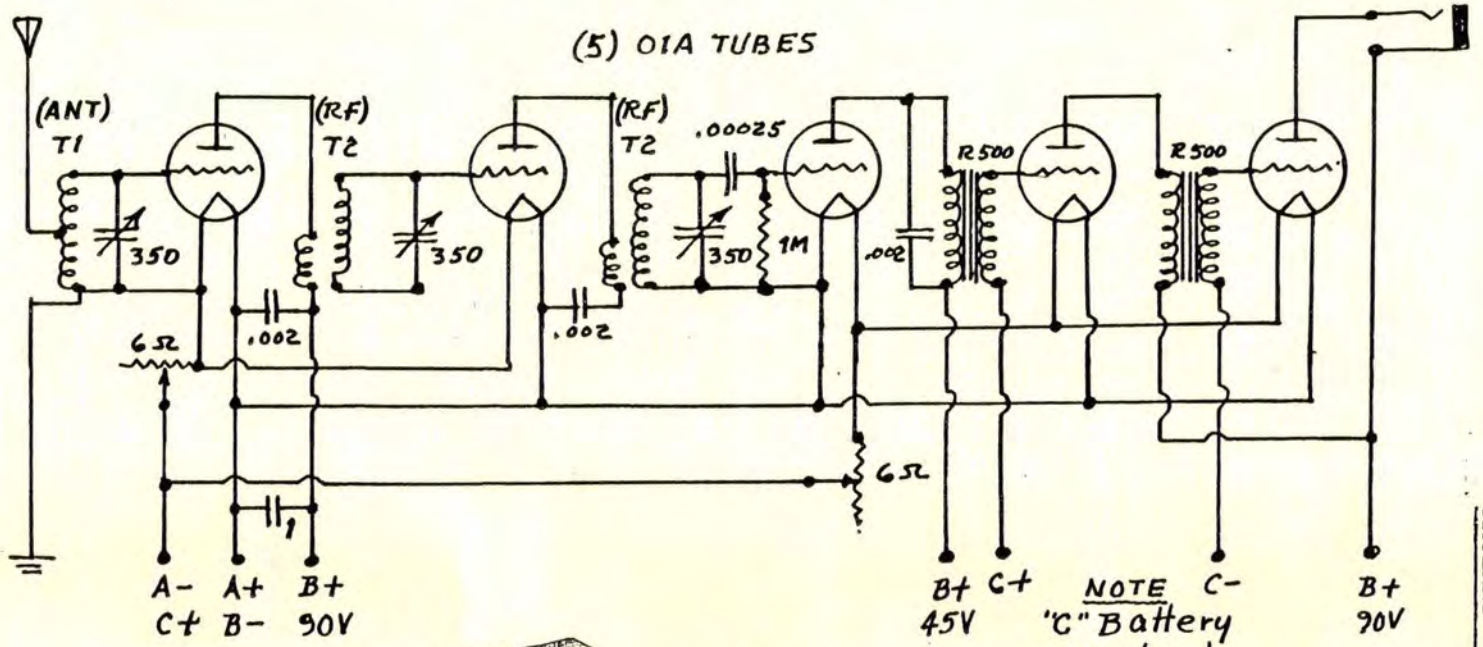

NOTE
"C" Battery used only if power tube is used.

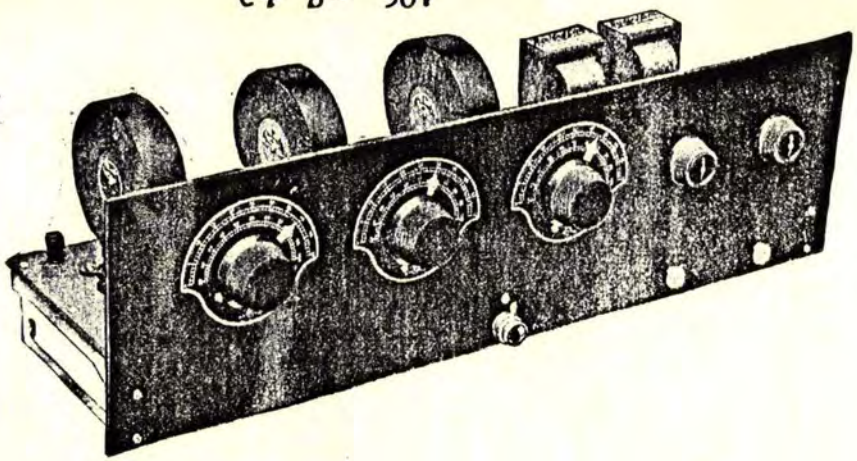

NOTES:

1. PANEL = 7" x 24"
2. PART NOS. = RAULAND NOS.
3. SEMI-ENCASED VARIABLES.
4. RAULAND DIALS (3).

RAULAND "ALL-AMERICAN" MODEL R TRF, 1927

RAULAND "ALL-AMERICAN" UNITS, 1924

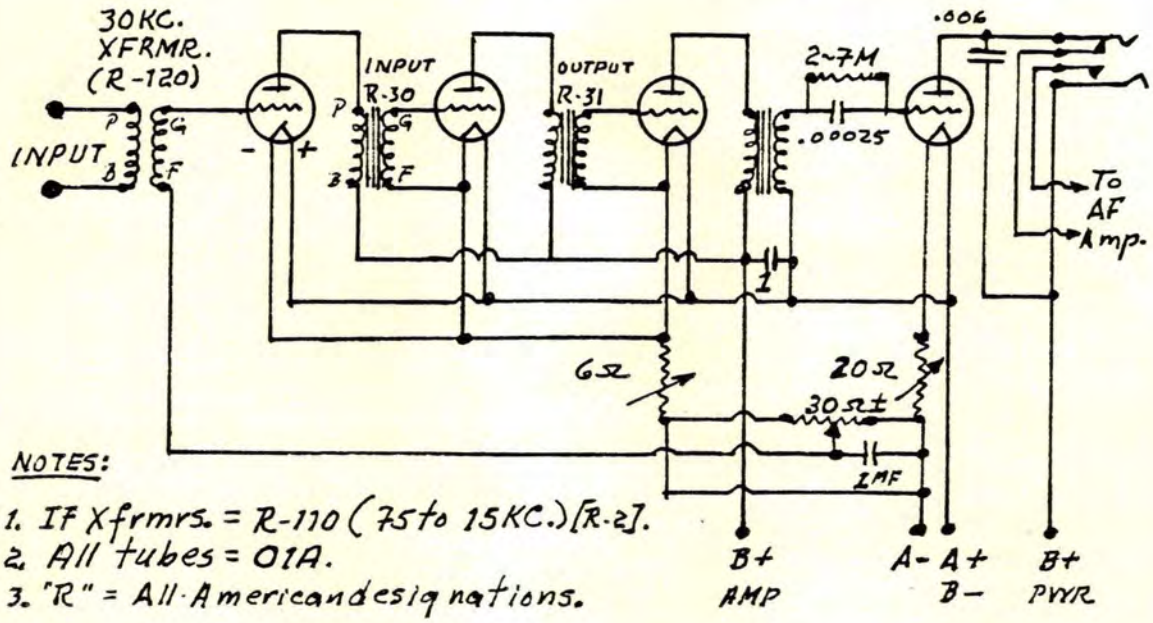

NOTES:

1. If Xfrmrs. = R-110 (75 to 15KC.) [R-2].
2. All tubes = 01A.
3. "R" = All-American designations.

ALL-AMERICAN IF AMP.

R-2 ALL-AMERICAN NEUTRODYNE

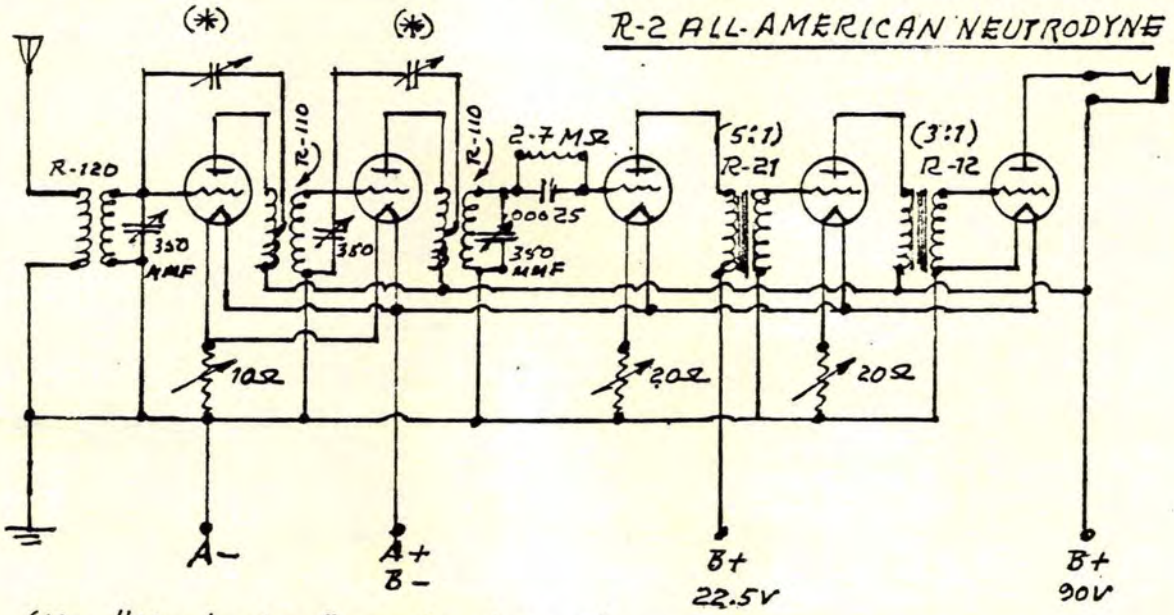

(*) = "Neutrodons" used originally.
All tubes = 01A.

(A-A File)

RAVEN SUPER-HET KIT, 1925; $25
Raven Radio Company, Albany, N.Y.

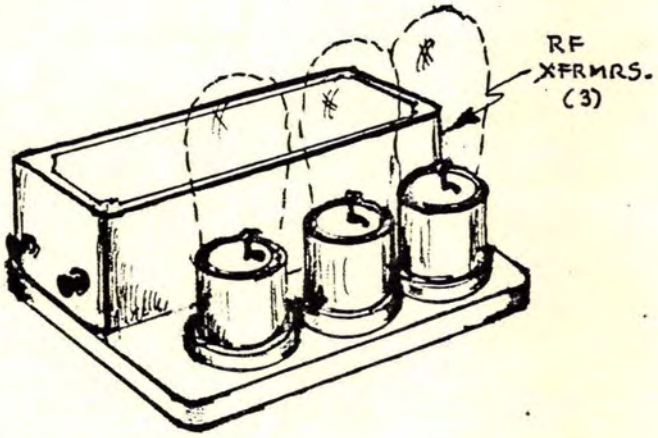

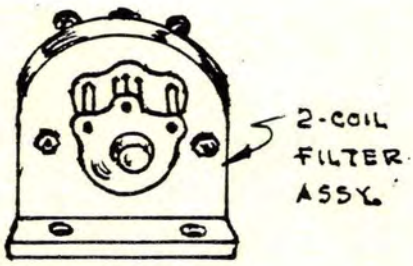

KIT CONSISTED OF:

2-Coil Filter Circuit.
RF Transformers (3).
Tube Sockets (3).
Oscillator.
Binding Posts.

Early Advert Copy:

"A complete compact monobloc RF long-wave length unit, perfectly matched, assembled, and wax-sealed in a Bakelite casing."

REGENERATIVE PRE-SELECTORS, 1930

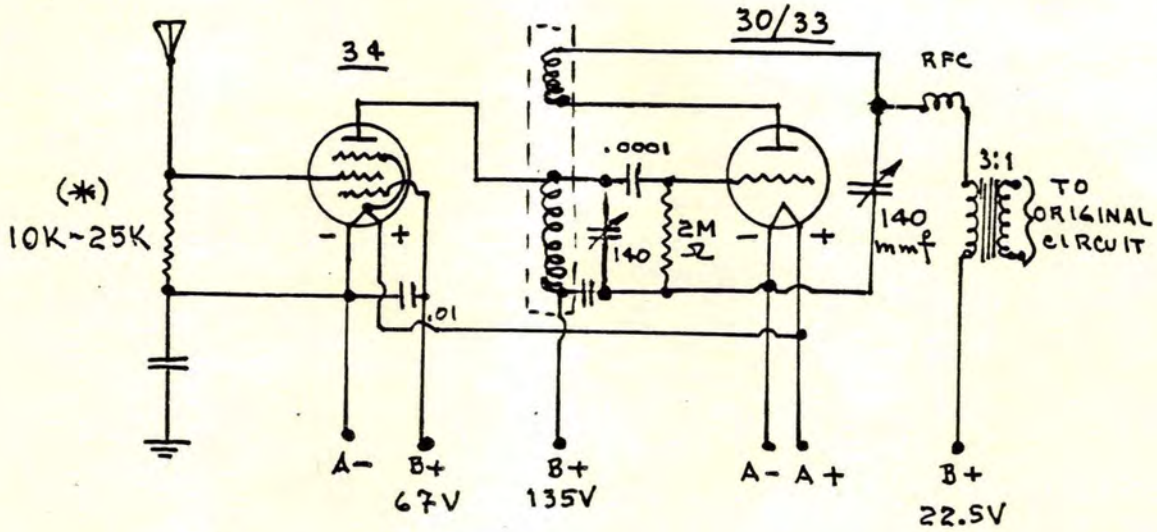

(*) = 2mH/8mH CHOKE MAY BE USED.

BATTERY-OPERATED

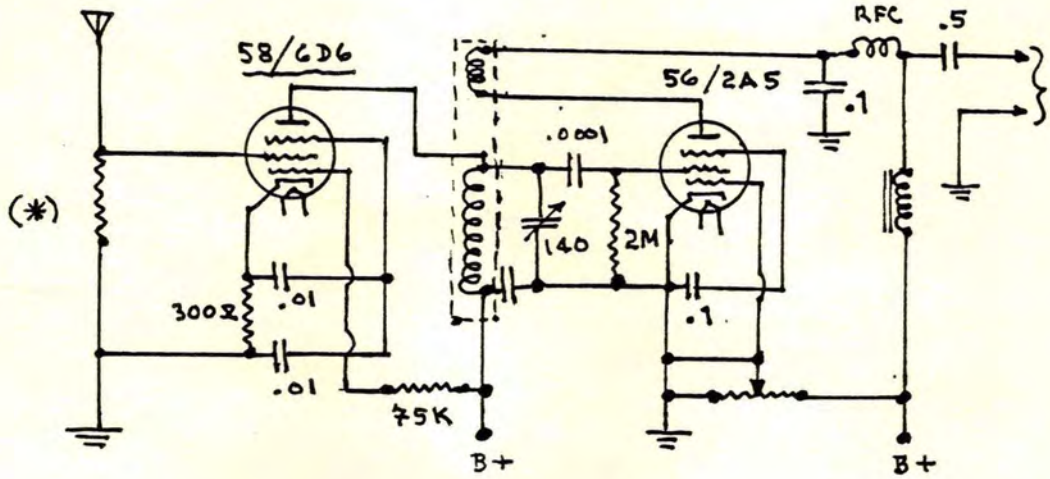

A.C. OPERATED

(See INFRADYNE Monograph.)

REMLER "INFRADYNE BC" RECEIVER, 1926

1st & 2nd Versions

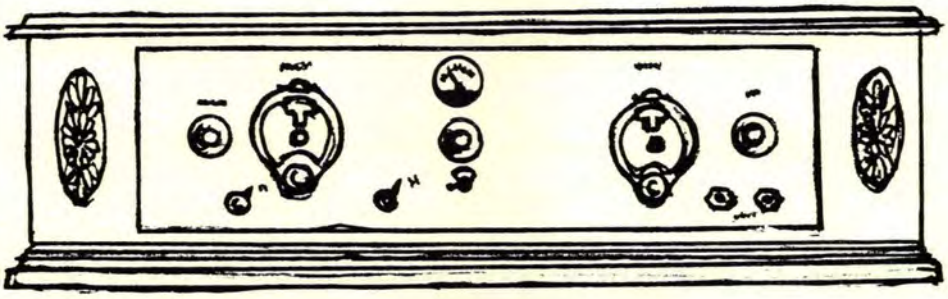

1926 "INFRADYNE" IN A CORBETT "C" CABINET

NOTES:
1. Panel = 7" x 30" x 3/16"
2. Redwood base = 10" x 34" x 3/4"
3. Thordarson Toroidal Cpils #33.
4. National "B" dials.
5. IF frequency = 3,200 KC.

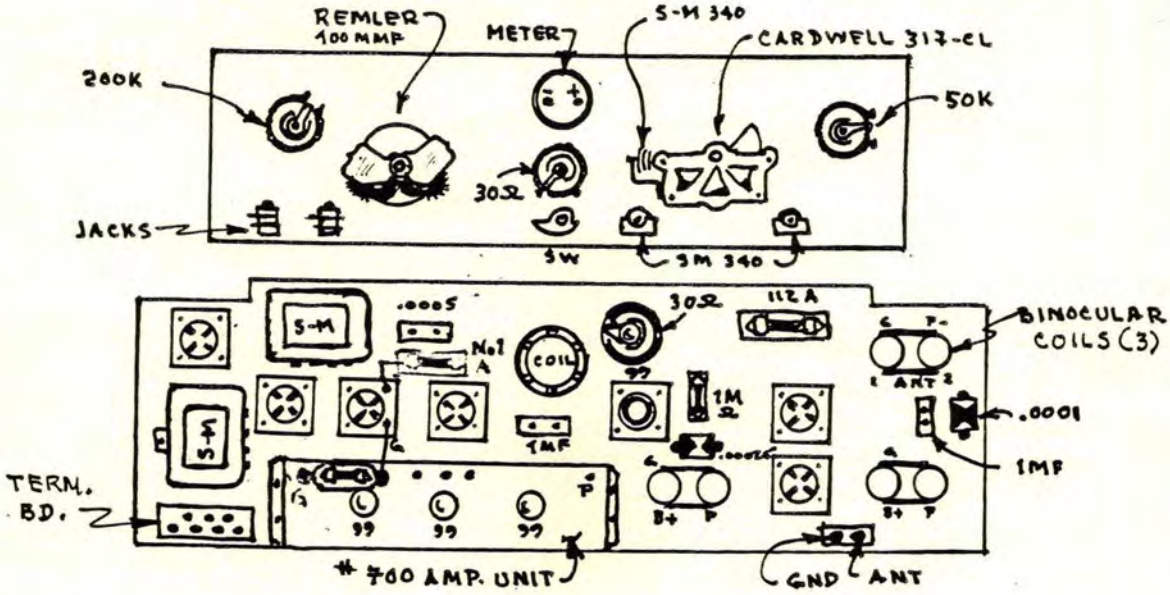

PLAN VIEW - 1st VERSION
(See 2nd Version base-board for dimensions.)

(R 8-26)

R.W. AC-300 RECEIVER, 1927; Sht. 1

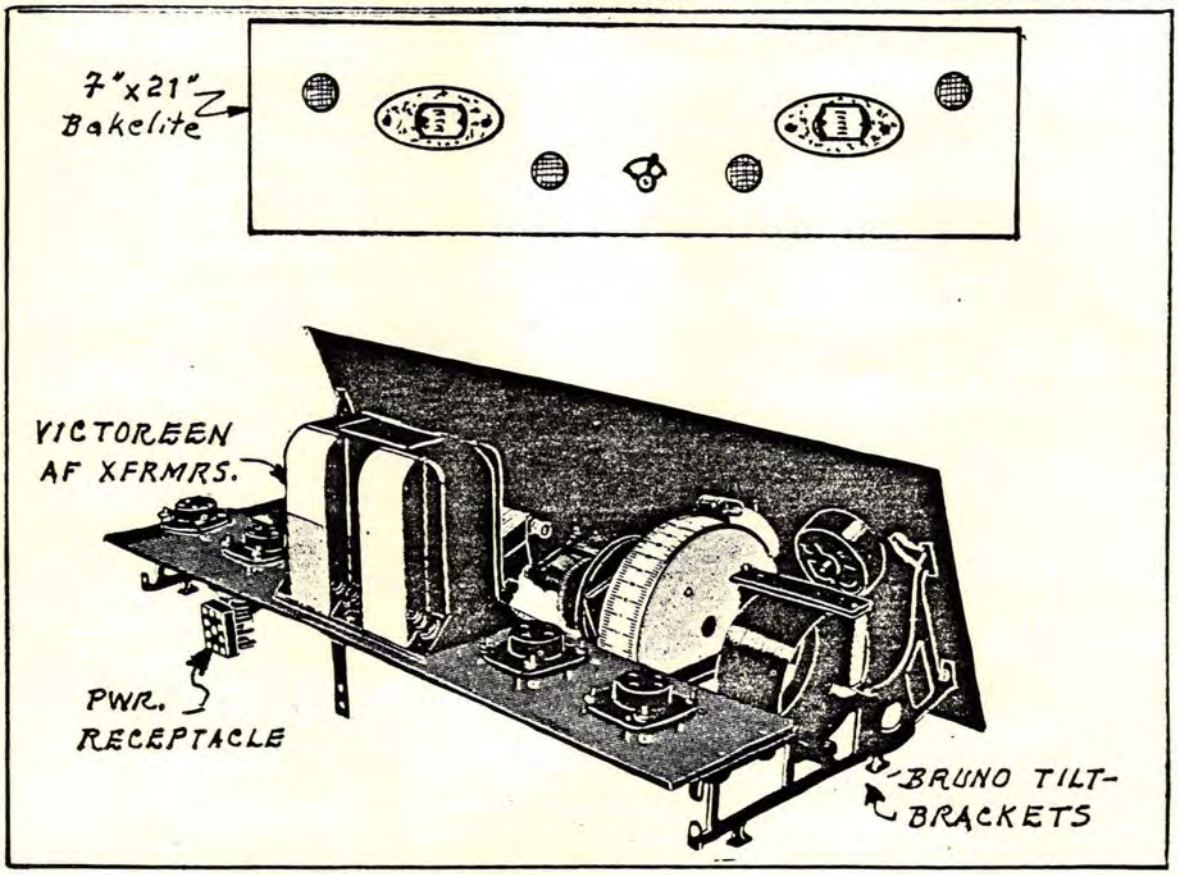

LIST of PARTS

T_1 = Hammarlund ANT Coil, HR-23.
T_2 = " 3-Circuit Coil, TCT-23.
T_3, T_4 = Victoreen AF Xfrmr. Unit. (Sangamo substitute.)
C_1, C_2 = Remler .0005 MF Variables: Drum Dials.

(3) 1 MF Condensers.
.00025 MF Grid Condenser w/clips.
(2) .0005 MF Condenser.
(2) 2 MF Condenser.
4 MF "
.01 MF "
500K Pot.
1K Pot. (4-Terminals)
20-Ohm, Type V Electrad,
50 " , " "

RFC 85 mH
(2) Sub-Panel Brkts.
FIL Xfrmr.
(2) Tip Jacks
110 VAC Pilot Lamp.
(2) 25K Resistors.
75K Vol. Pot.
2MΩ Resistor
2K Resistor
Power Switch
10K Variable Resistor

(RW. 12-24/12-31-27)

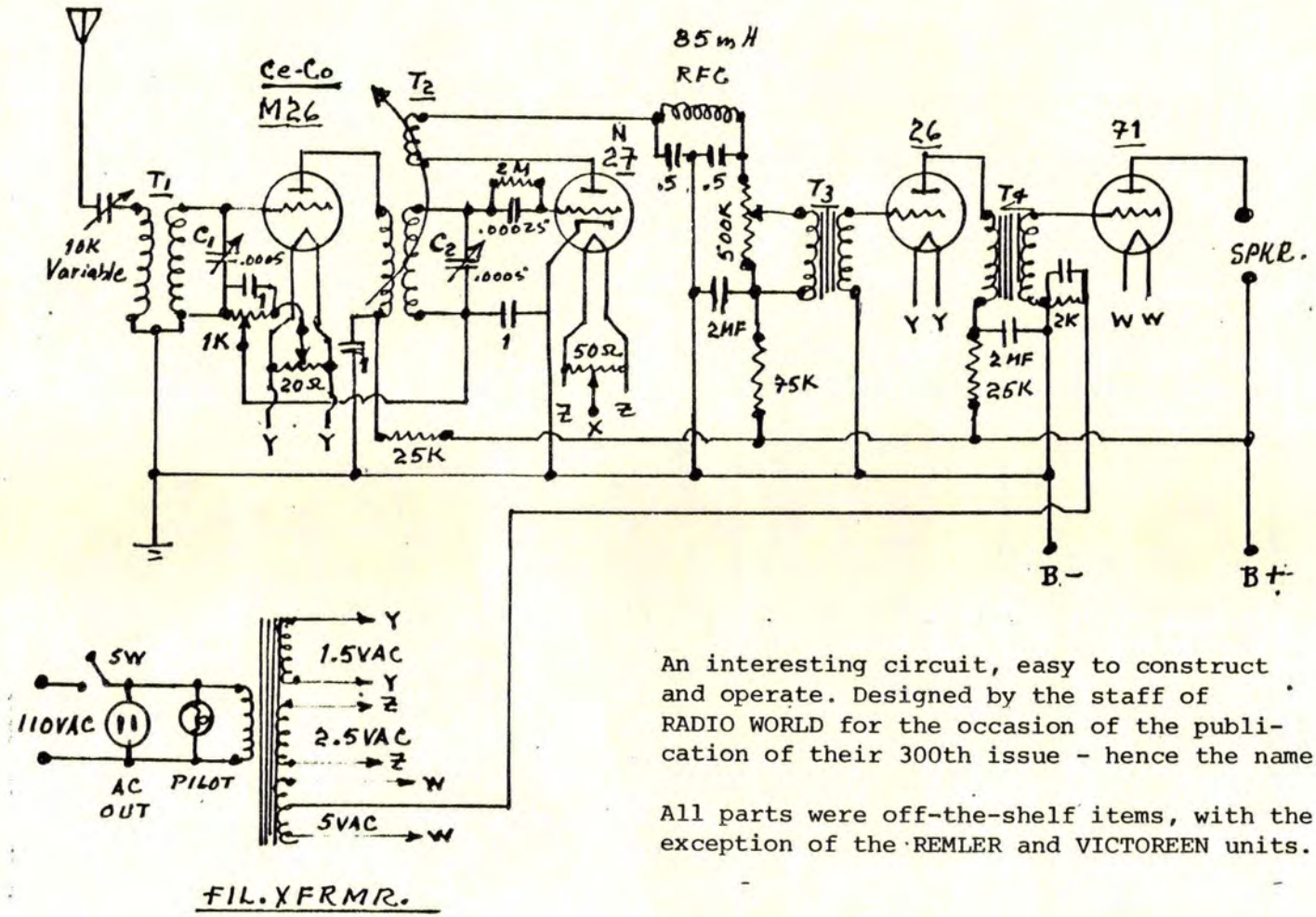

An interesting circuit, easy to construct and operate. Designed by the staff of RADIO WORLD for the occasion of the publication of their 300th issue - hence the name.

All parts were off-the-shelf items, with the exception of the REMLER and VICTOREEN units.

R.W. AC-300 RECEIVER, 1927; Sht. 2

SAMSON 3-TUBE T.R.F. RECEIVER, 1924

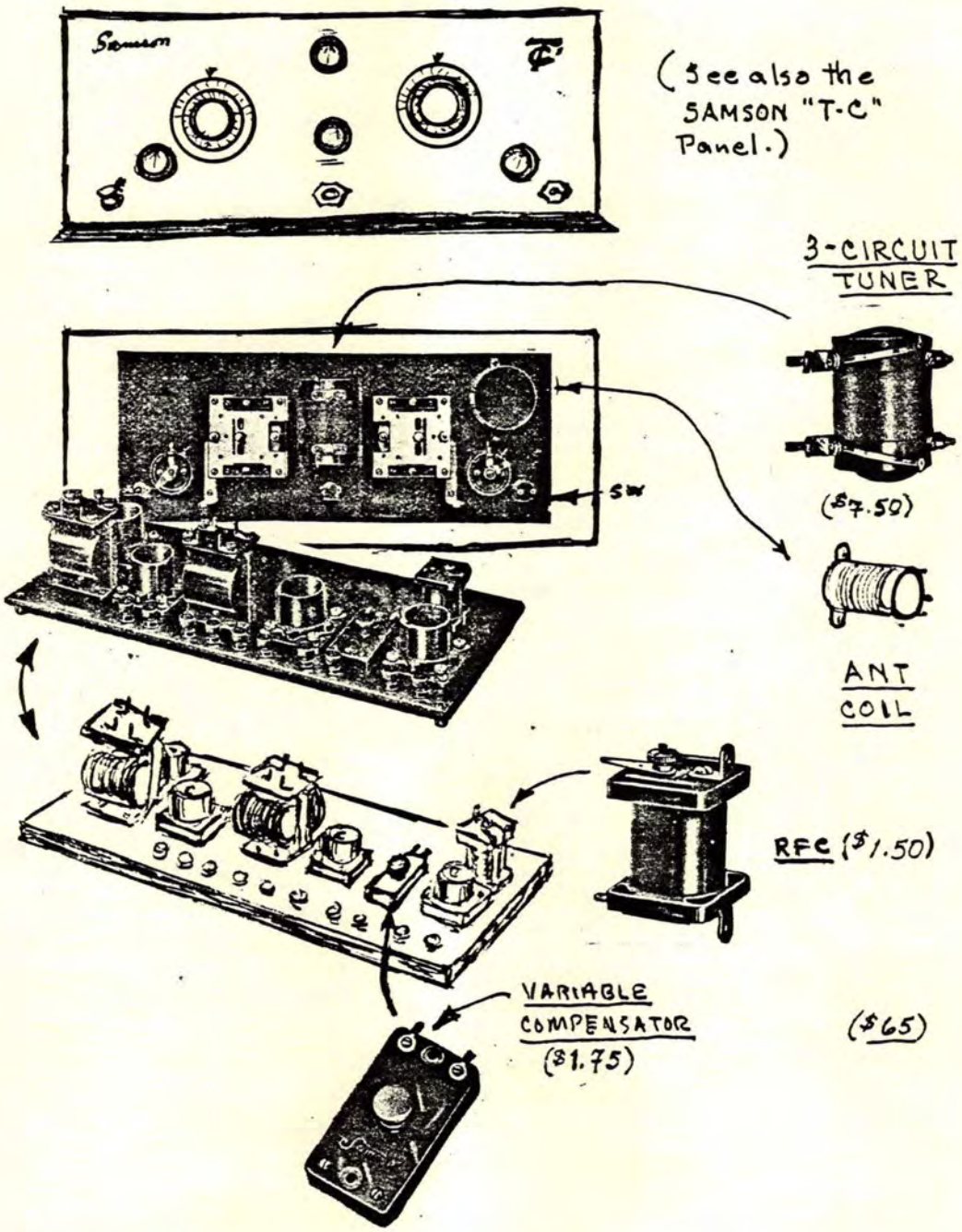

NOTE: SAMSON also offered a super-het kit at this time for $30.

THE SAMSON "T-C" RECEIVER of 1926 (Sht.1)

The SAMSON "T-C" was the work of Prof. Bowles, M.I.T., 1926, in co-operation w/ SAMSON ELETRIC CO., founded in 1882 in Canton, Massachusetts. The set, offered only as a kit, was much touted in Radio World & Radio Home. The SAMSON components were excellent, but the set enjoyed only a Spring-time popularity. The chief reason being that the circuit was difficult to neutralise; was unstable on strong signals; & while very sensitive, was not very selective. The Samson Netralising Condenser (.0003 max. cap.) seemed essential, as also the Variables, as National, Bremer-Tully, & Apex were tried, & all were used in some kits. The kits sold for $19. Hammarlund SLF variables seem to have given the best service (.0005 mf).

Another major problem, which I also encountered when I constructed the three versions of the "T-C," was a high-pitched whistle that is not affected by rotating the tickler, or by disconnecting the ANT or GND. Elimination was secured by placing a .0005 condenser across "G" & "F" posts of the last AF xfrmr.

The fact that kits sold by various outlets were not all of a kind - i.e., non-standardisation of components, except for the SAMSON items - probably contributed also to the lack of popularity of the "T-C." Kits contained such marques as Brach, Daven, Radiart, Rauland, Eby, Carter, Frost, Thordarson, etc. - all makers of components of equal merit.

There were three versions of the SAMSON "T-C", the chief difference being in the audio stages - e.g.:

Tranformer Coupled;
Resistance-Coupled;
Impedance-Coupled.

In terms of performance, they were relatively the same, w/ the xfrmr.-cpld. version the easiest to construct.

You will find circuits of all three versions in the following pages. If you have the critical SAMSON items, construction of the "T-C" could prove rather educational.

(RW 10-23-26)
(RH 3/4-26)

THE SAMSON "T-C" RECEIVER of 1926 (Sht.2)

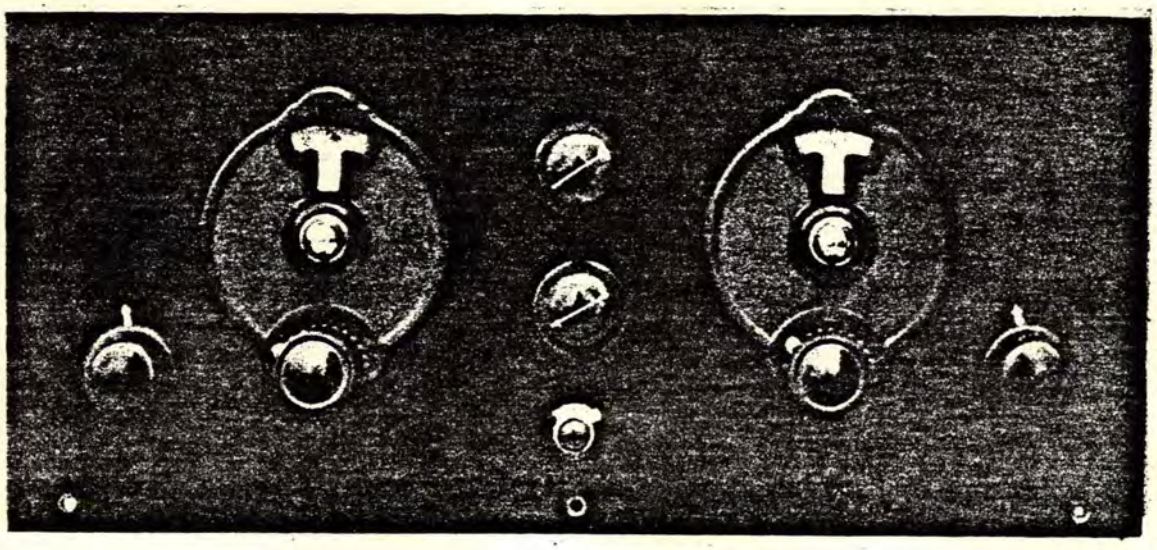

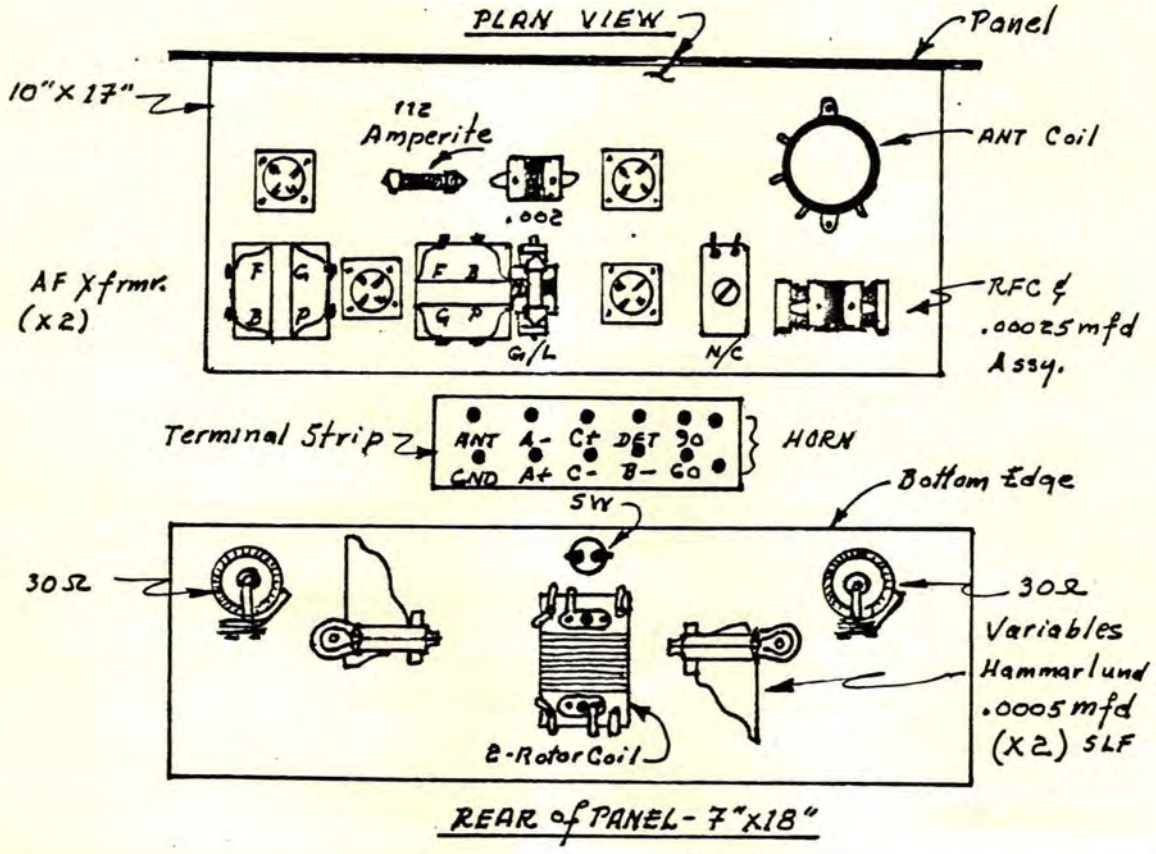

THE SAMSON "T-C" RECEIVER of 1926 (Sht.3)

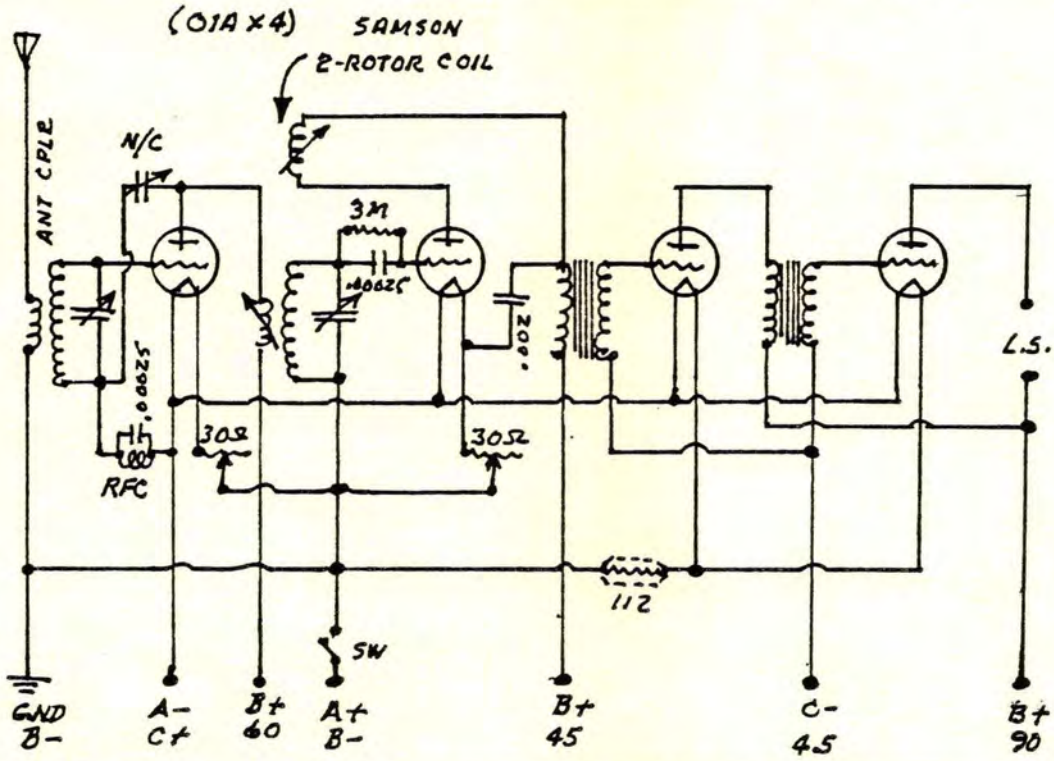

SAMSON "T-C" w/ R-C Amplification
(See Sht. 4 for Values)

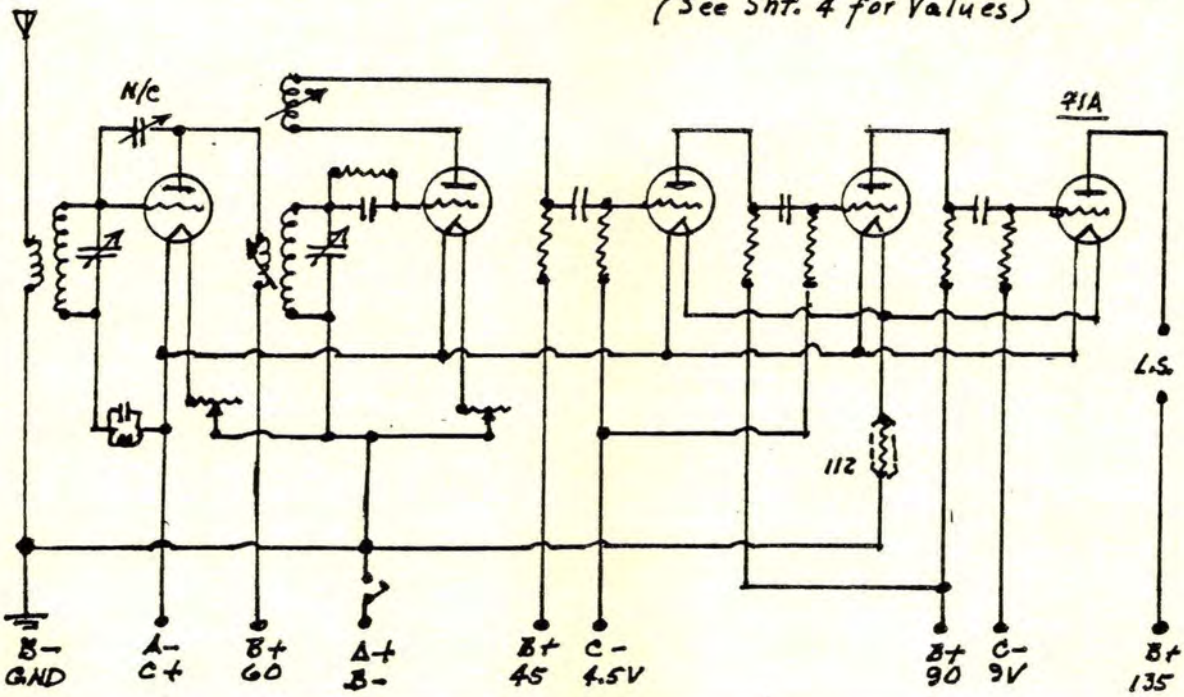

SAMSON "T-C" RECEIVER, 1926; Sht. 4
AF Amplifier Configurations

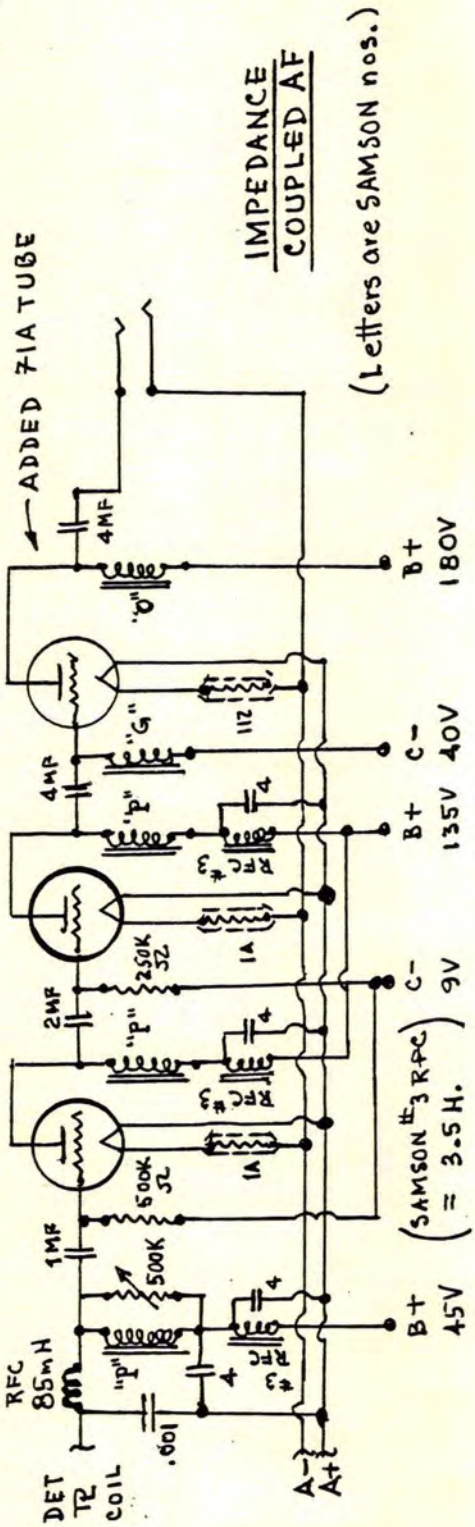

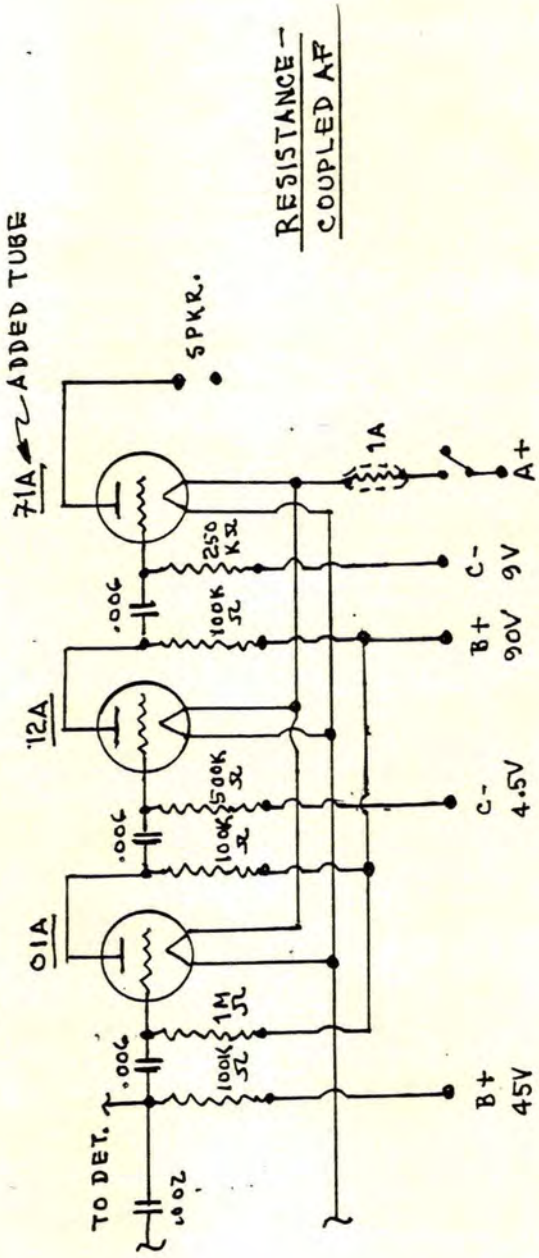

SAMSON "TCR" COIL CONNEXIONS

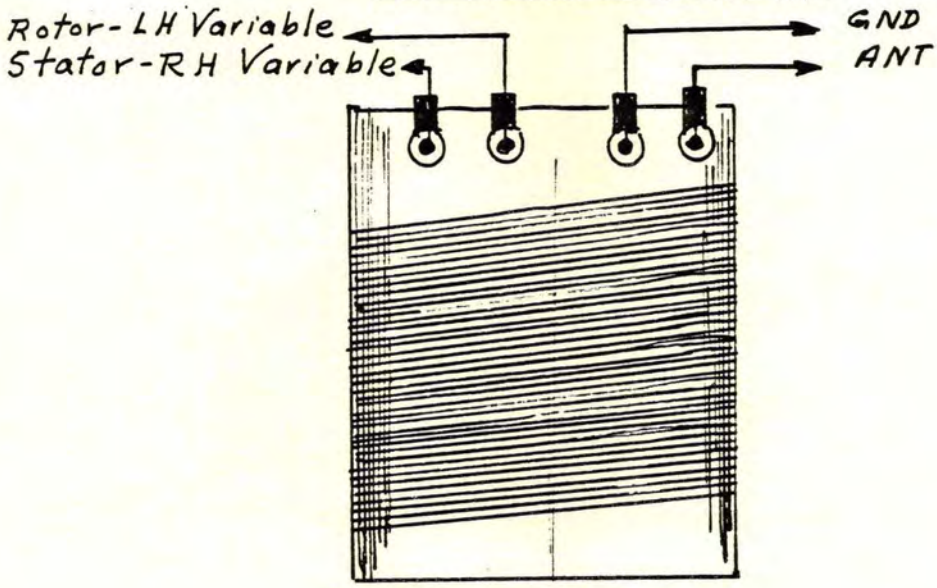

ANT COIL

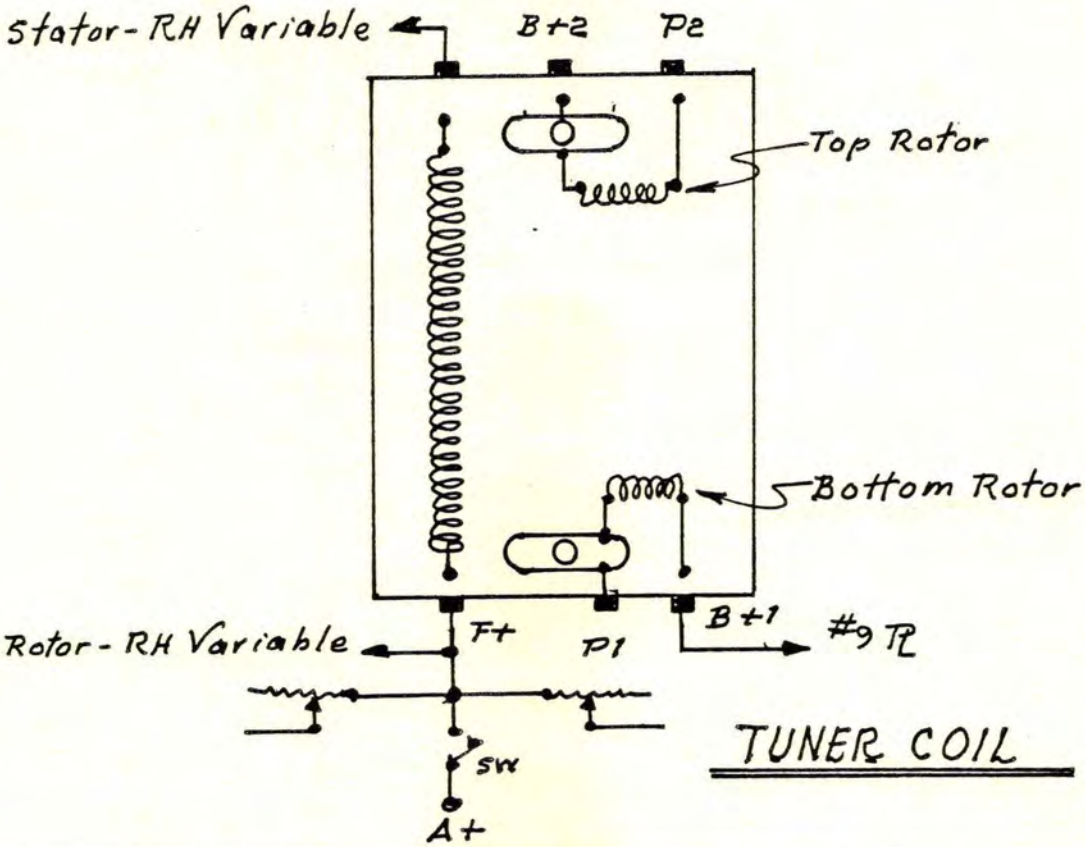

TUNER COIL

THE SAMSON "T-C" RECEIVER of 1926 (Sht.5)

An R-C VERSION NOTE

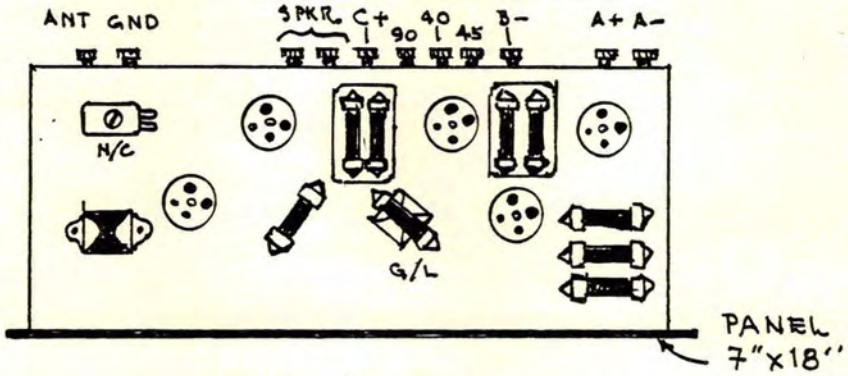

BASEB'D. LAYOUT

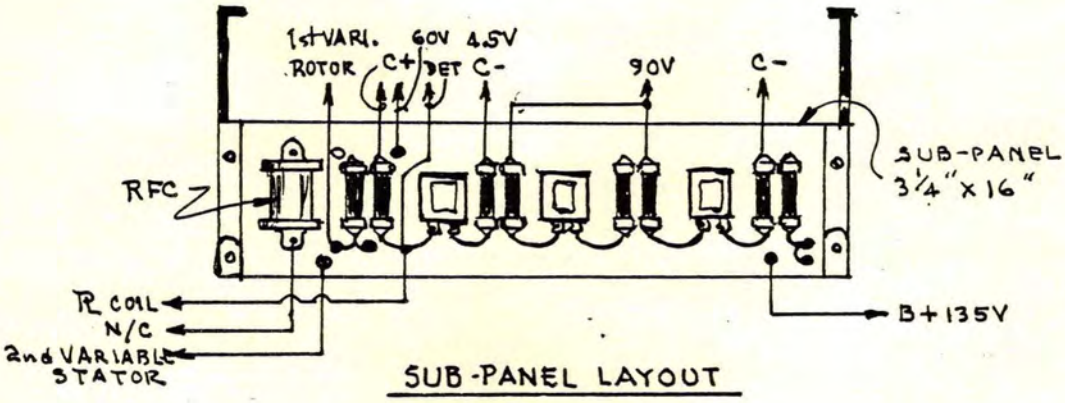

SUB-PANEL LAYOUT

Tube sockets are mounted directly above R-C units.

(See "INFRADYNE" MONOGRAPH.)

SARGENT-RAYMENT SEVEN, 1928; Sht. 1

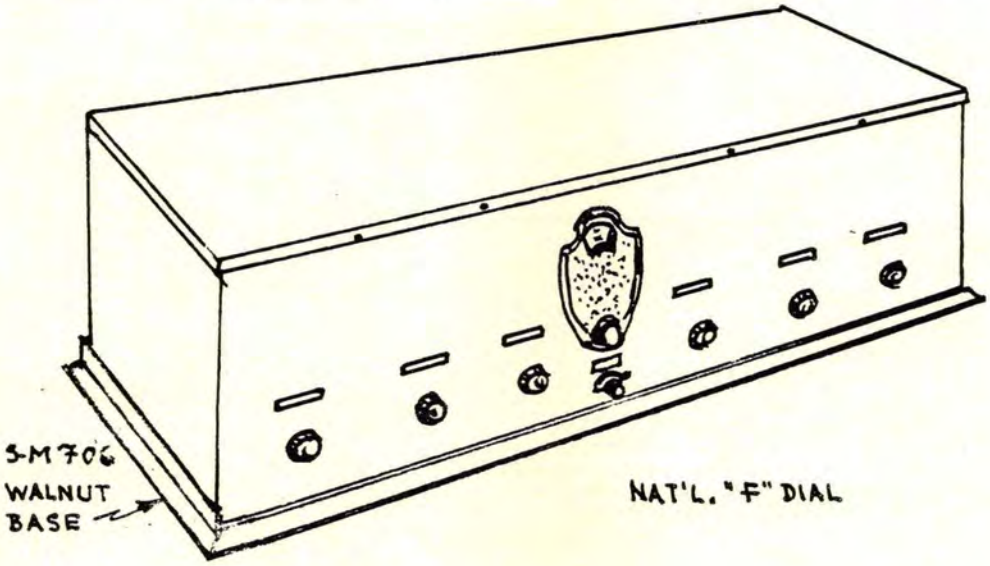

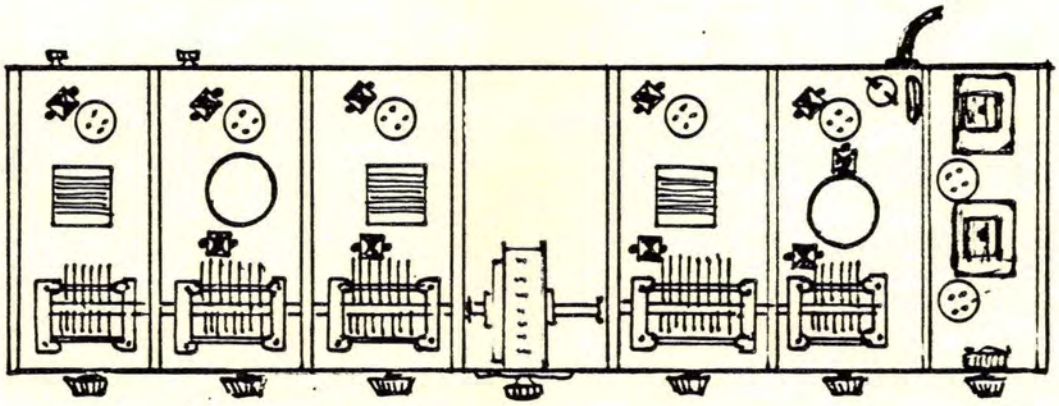

NOTES:

1. CLOUGH AUDIO SYSTEM.
2. EVOLVED FROM THE SARGENT-RAYMENT SIX.
3. AF CIRCUIT ALONE USED FOR PHONOGRAPH; CONNECTED ACROSS PRI OF 1st AF XFRMR.
4. FOUR S.G. RF STAGES; DET; 3-STAGE AF. (8) RFC.
5. REJECTOR (WAVE-TRAP) CIRCUIT; ALL STAGES TRIMMABLE.

(RW 12·8·28)

(See "INFRADYNE" MONOGRAPH.)

SARGENT-RAYMENT SEVEN, 1928

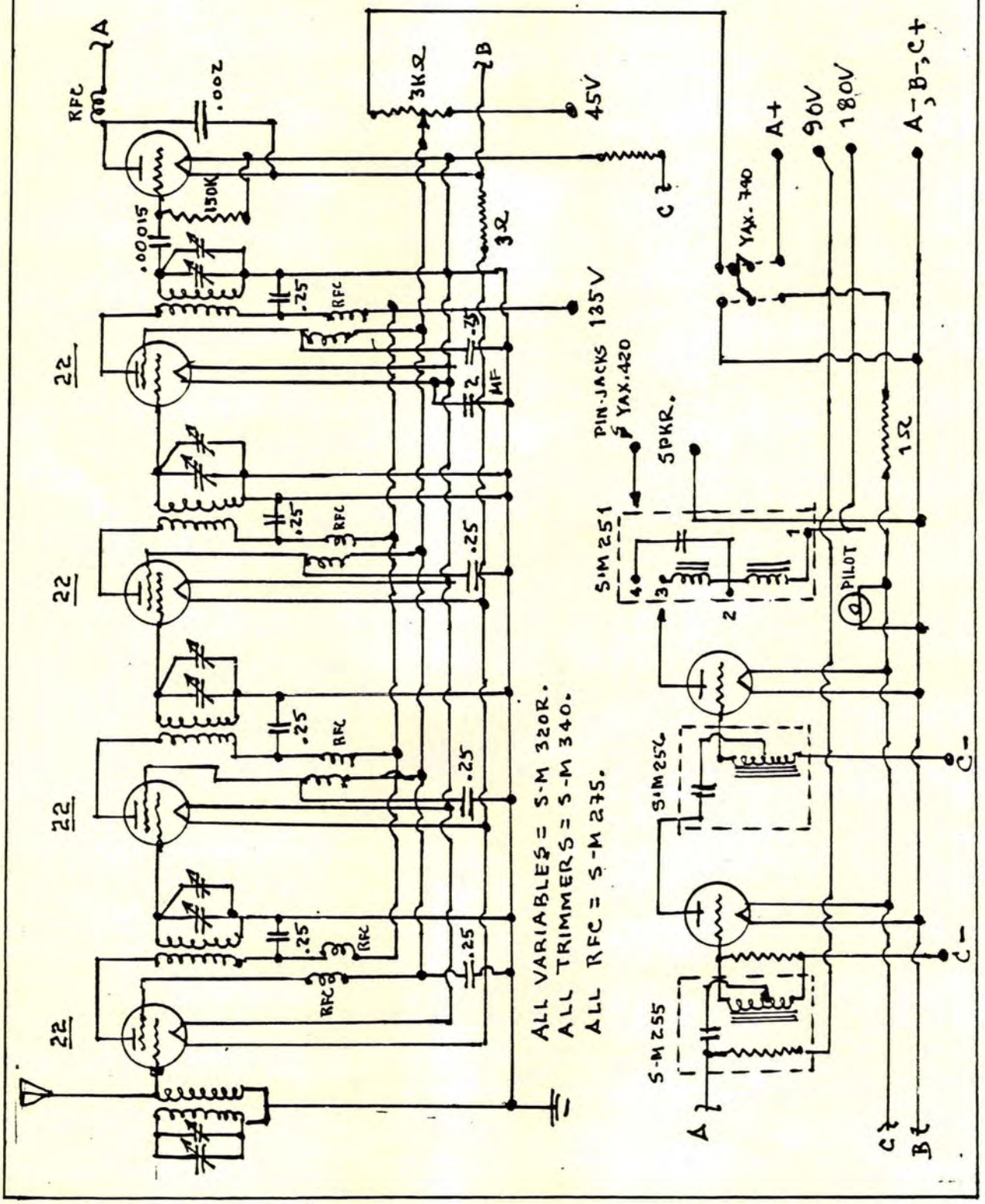

THE SCHNELL TUNER of 1926

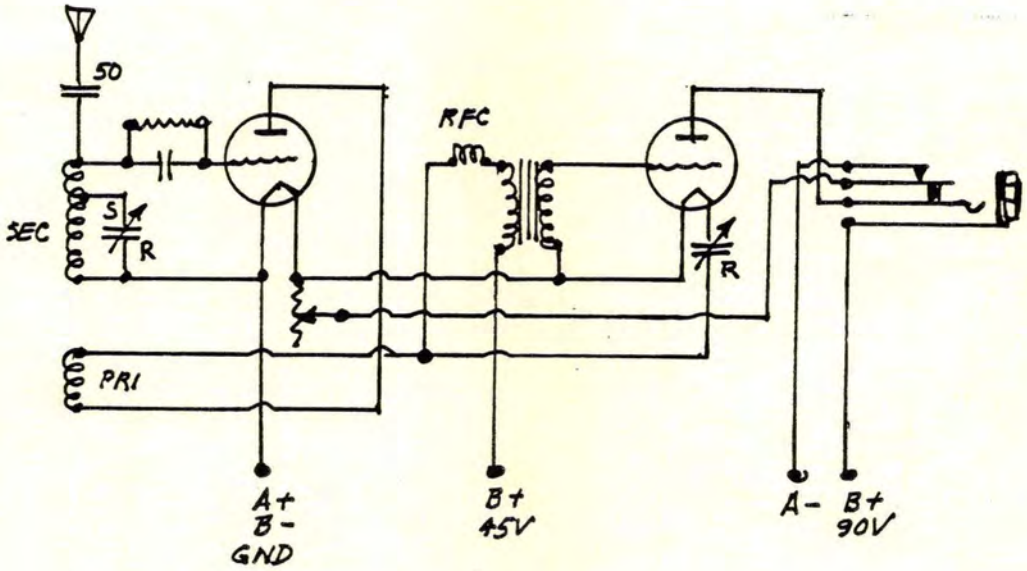

AF Xfrmr. = 10:1
(2) 01A Tubes.
11-Ohm Rheostat.
RFC = 100T #30 DCC, 1"Ø x 5" Form.
Variables = (2) 250 MMF.
Grid-Leak = 3 Megohms.
Grid Condenser = 250 MMF (.00025)

COIL DATA: SEC (Grid) = 9T #28 SCC, 3½" Ø Form. Tapt 3T from grid end; Shunt variable across remaining 6 turns.

PRI (Tick.) = 5T on same form, spaced 1/8" from SEC.

("SCHNELL" in German means quick, fast, speedy; it is also a family name in Southern Germany.)

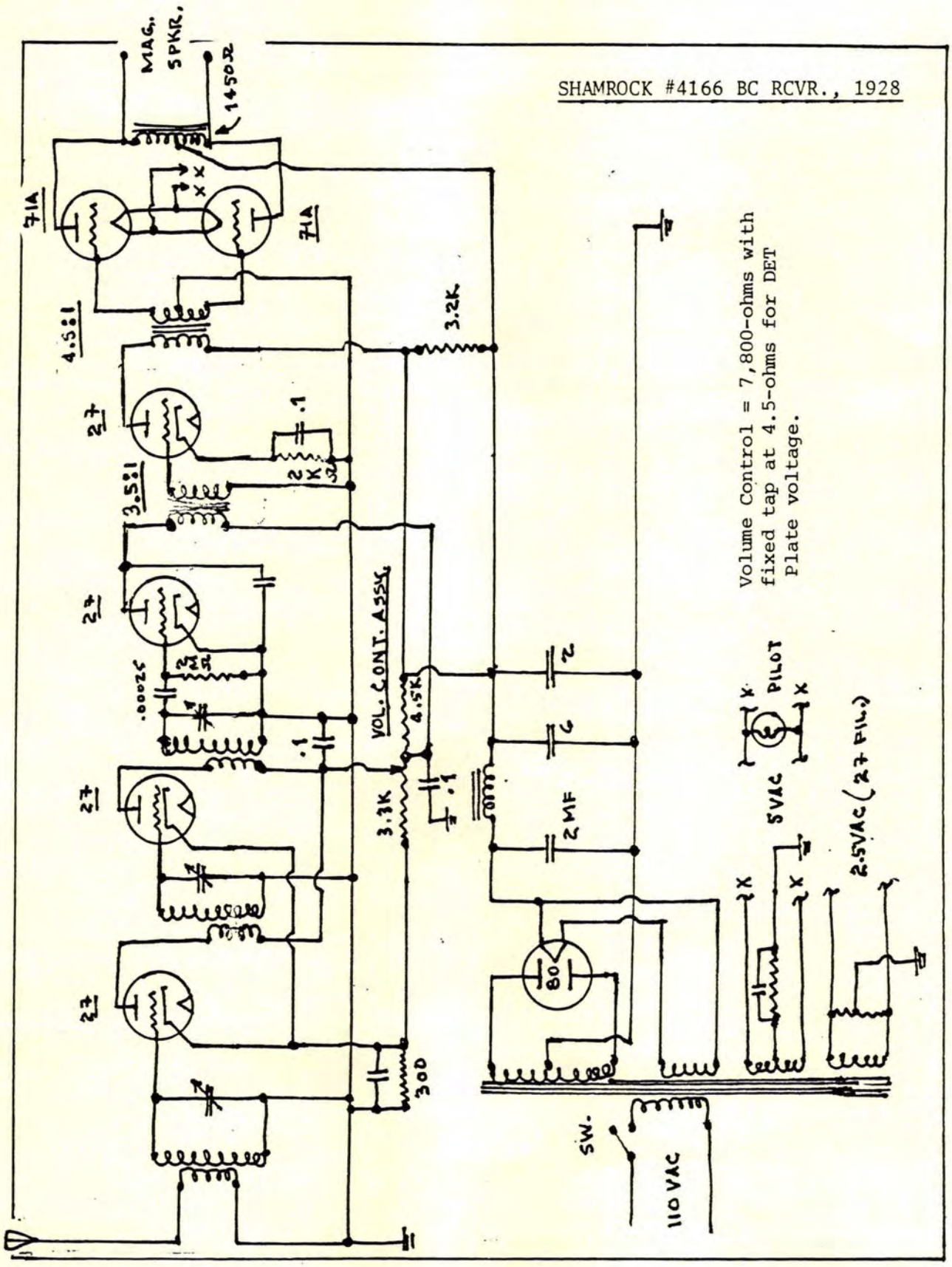
SHAMROCK #4166 BC RCVR., 1928
MAG. SPKR.
14502
71A
71A
4.5:1
27
3.5:1
27
27
27
.00025
.1
VOL. CONT. A35K
4.5K
3.3K
.1
3.2K
2
6
2 MF
80
300
PILOT
5VAC
2.5VAC (27 FIL.)
SW.
110 VAC
Volume Control = 7,800-ohms with
fixed tap at 4.5-ohms for DET
Plate voltage.

THE NON-UBIQUITOUS ST. JAMES RECEIVERS

As would be expected, there were those manufacturers in the dawn of Radio who offered all things to all men. If distance (DX) and selectivity were in vogue, or higher audio power, claims were immediately made in all media by some manufacturers offering whatever was being touted. It was ever thus, and the old Latin warning still obtains: *Caveat Emptor!*

Some fictional claims were phrased in rather erudite language by which some readers were intimidated. Others, knowing the quality of their goods, simply offered it behind their name. There were a few advances in some of the out-of-left-field offerings, however, and if later invalidation occurred due to other advances, that, too, was part of the game. One such contributor were the sets offered by St. James.

The two sets were known as the "Twin Four" and the "Upright 8", a specious distinction in as much as their circuitry was identical. Claims by St. James, in his own words:

"The receiver must be immune to signals excepting through the proper selection of channel, the loop, or coil collector. SHIELDING ACCOMPLISHES NO ADVANTAGE, and the St. James Labs have developed a new and effective way to make use of the "U" circuit. If we consider that the wiring and exposed devices in a set as being capable of picking up a portion of all electrical energy and disturbances which set up a field, it becomes apparent that such is detrimental to the receiver. A column of water in a pipe has a certain pressure existing throughout its height, but we can balance out the pressure by bending the pipe in the form of a "U". The water is now at rest and may not be affected by external pressures. Our receiver likewise is so constructed, the wiring forming a "U" by turning back upon itself so that one half of the energy opposes the other half, thus balancing out energy that might be impressed on the wiring. The advantages from this system are obvious....."

The argument was specious, of course, but apparently there exist those who will try most anything, and the St James receivers endured for a year or two. Excluding the speaker, loop, and cabinet, the "Twin Four" could have benn built in 1927 for $83.40. The "heart" of these receivers was the St. James evacuated RF transformers, four being required at $7.50 each. All other parts were conventional for the period - that is, off the shelf items from standard manufacturers.

Dr. Wm. Jelinek of Rhinelander, Wisconsin, was quite taken with the St-James "Twin Four", and restored one from the data contained within these Sketch-Books, with thanks. He was, however, disappointed in as much as the performance left something to be desired. We suggested he build an obviously better receiver, the "Ultradyne L-1".

* * *
* *

ST. JAMES TWIN-FOUR RCVR., 1927;Sht.1

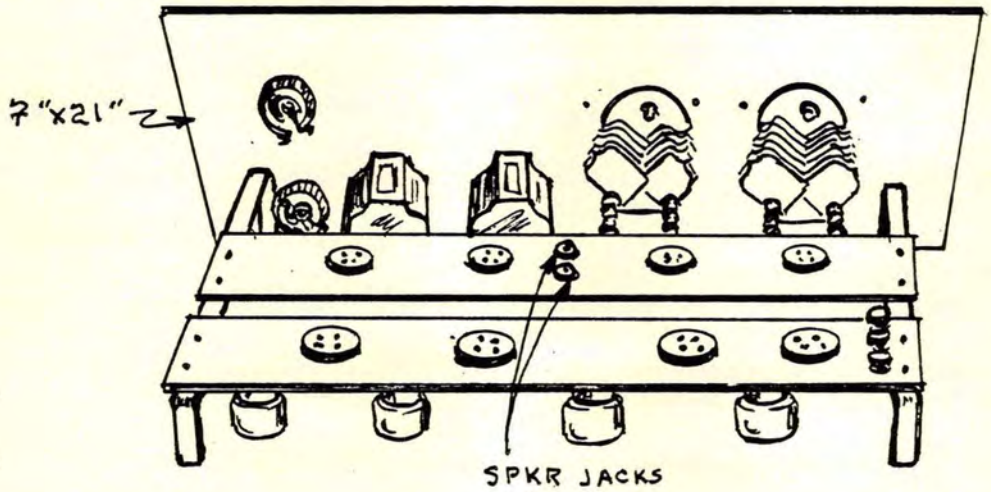

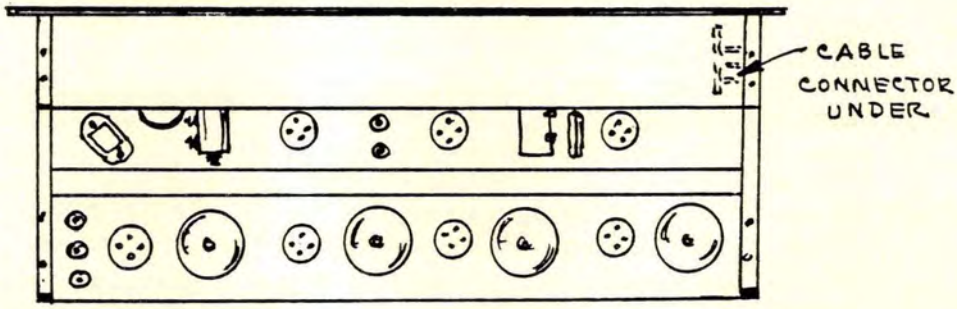

BOTTOM VIEW

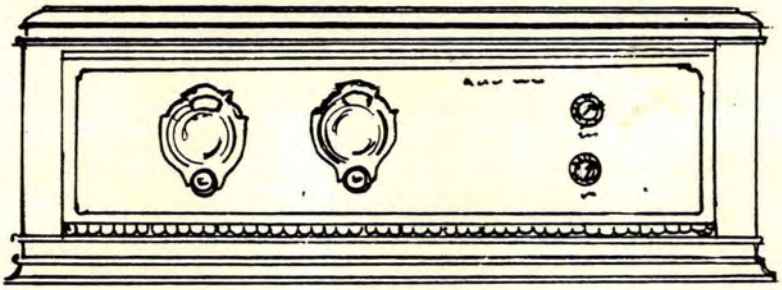

REMLER TWIN-ROTOR VARIABLES.
KURZ-KASCH DIALS.
LIGNOLE PANEL.
THORDARSON R-200 AF XFRMRS.

EHLERT
CABINET

ST. JAMES TWIN-FOUR RCVR., 1927; Sht.2

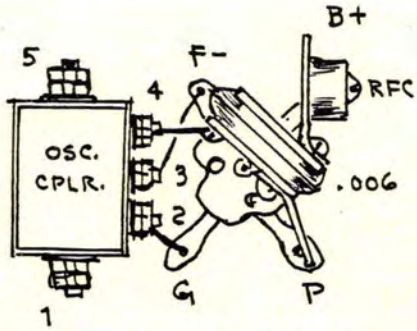

OSC. CPLR. DETAIL
(St. James Special)

NOTES: 1. INSULATED WIRES TWISTED TOGETHER BUT NOT CONNECTED (or: 16 mmf MIDGET).
WIRES 6" LONG (±).
2. CABLE COLOUR CODE:
RED = A+
BLK. = A-
YEL. = B-
BLU. = B+45V
GREY. = B+ 90V
GRN. = B+ 135V

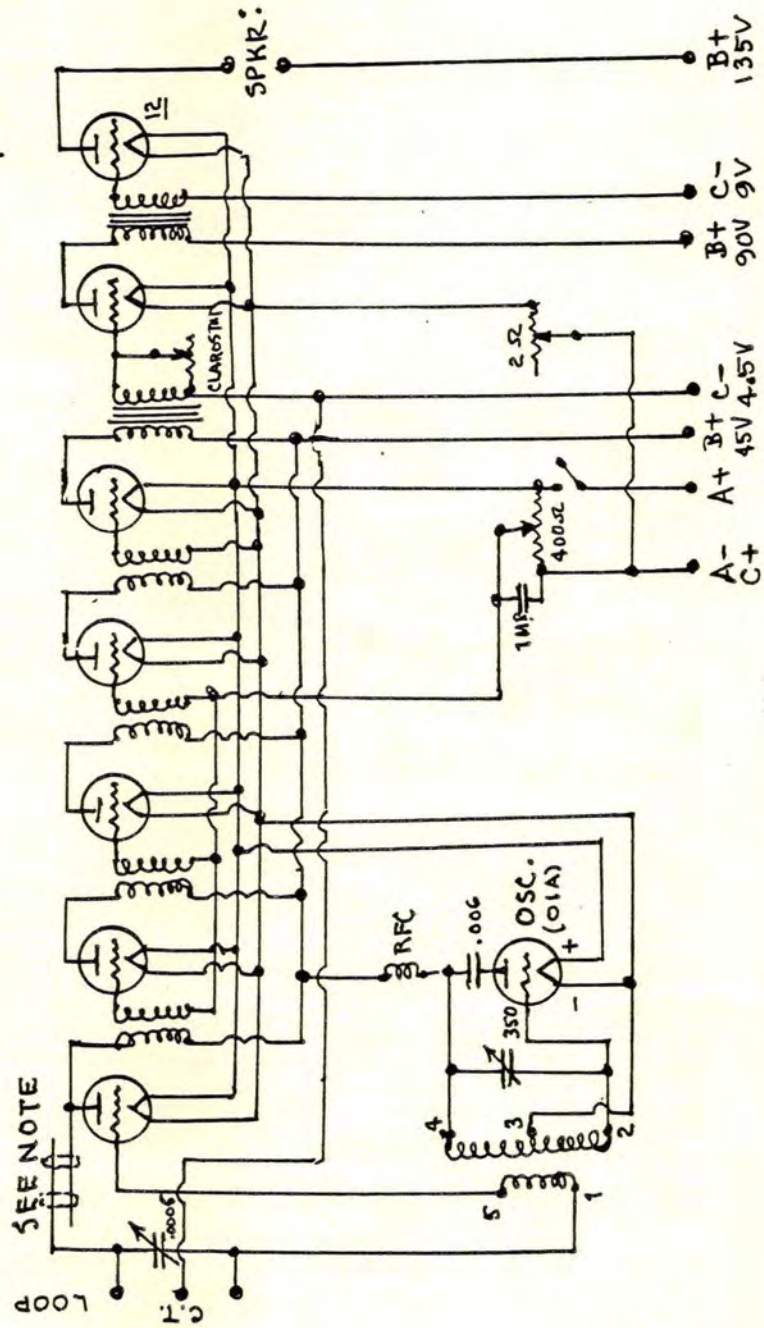

ST. JAMES "UPRIGHT EIGHT", 1927;Sht.3

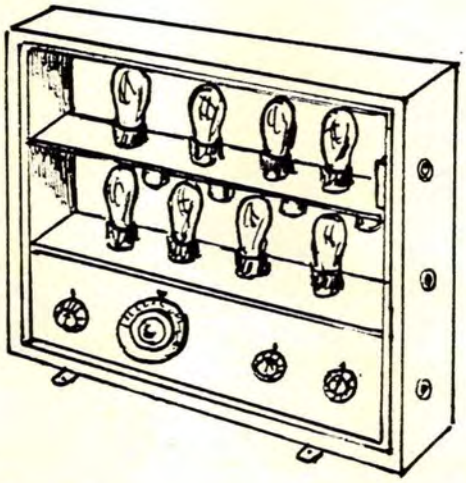

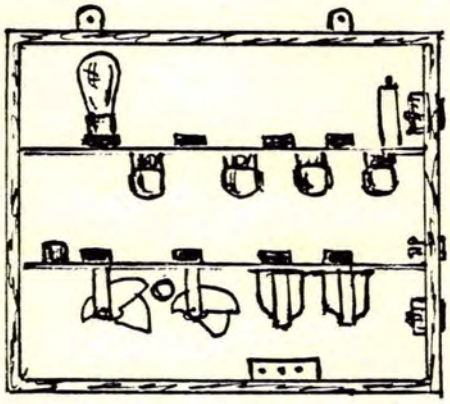

This receiver is essentially the same as the "Twin Four", the configuration being different for the sake of difference. It was an awkward item to pack about, even though it was advertised as a portable. The chief distinction of St. James was his evacuated RF transformers.

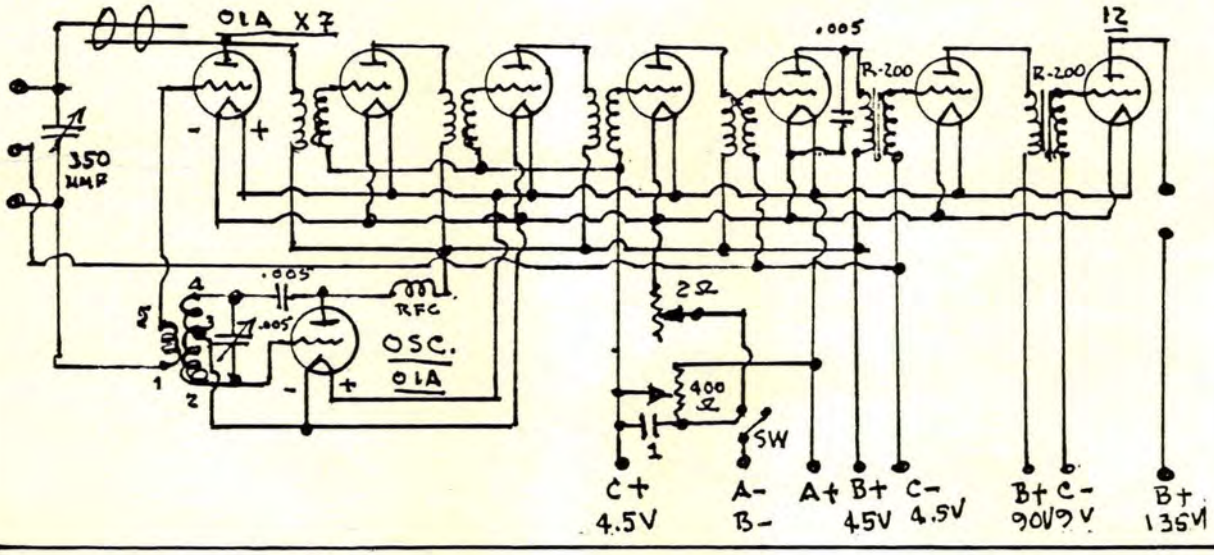

THE UNKNOWN SCOTT PORTABLE. 1928

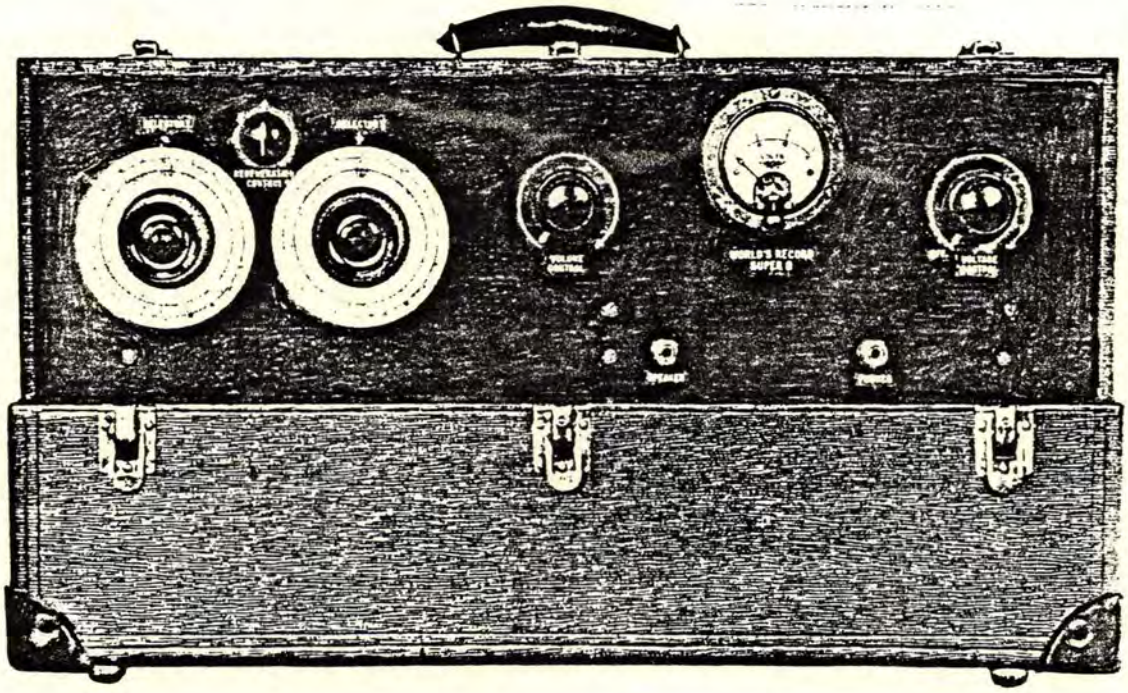

No-one associates Scott with portables, but the cut shown above proves that there was one. It was nearly a full-size WORLD's RECORD 9. The circuitry was identical to that depicted for the table model, and if you are so minded to construct a Scott Portable, you have a guide here. You certainly would have one of a kind portable, and with a performance equal to the table model WORLD's RECORD 9.

* * *
* *
*

SCOTT WORLD's RECORD SETS EVOLUTION

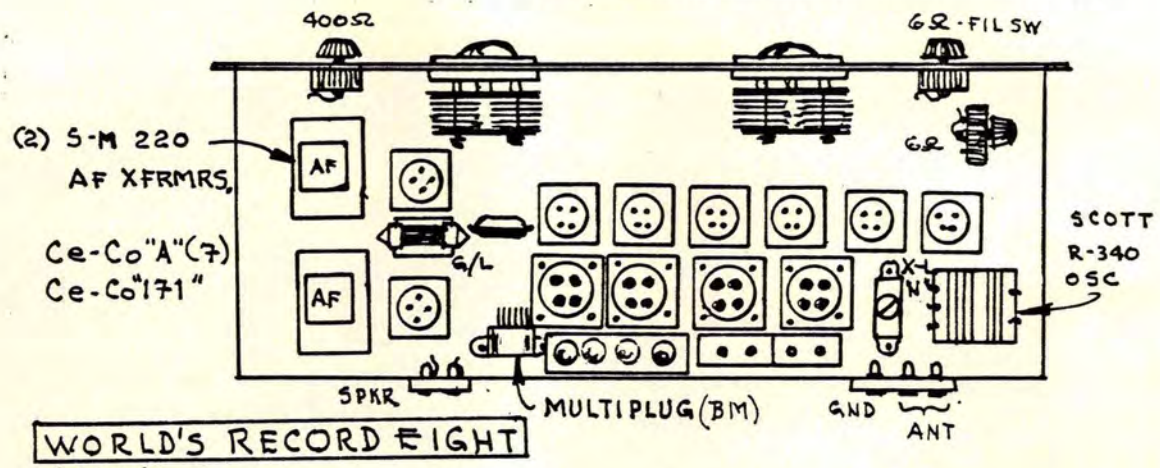

WORLD'S RECORD EIGHT
(1927)

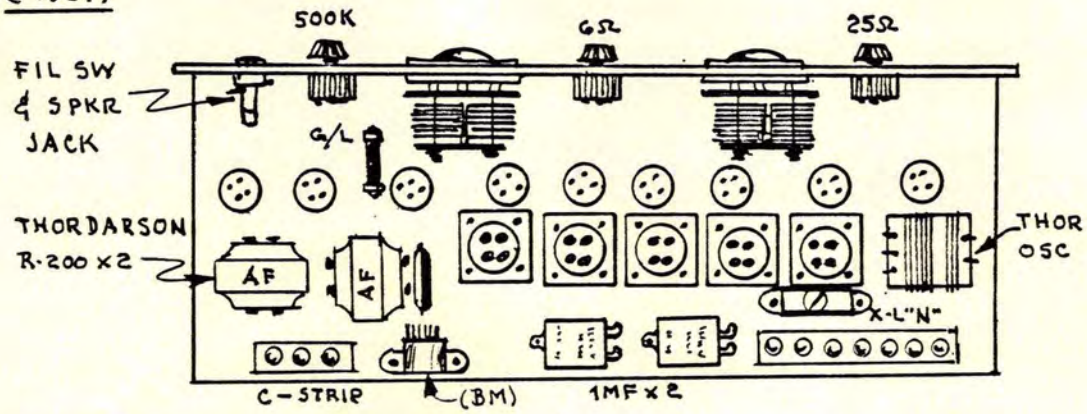

WORLD'S RECORD NINE
(1928)

SCOTT "SELECTONE" XFRMS.
USED IN ALL VERSIONS.

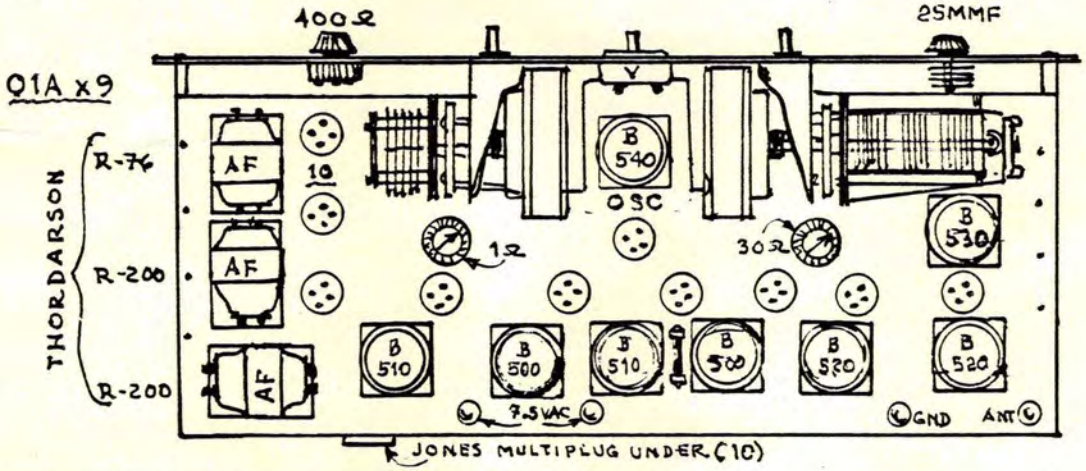

WORLD'S RECORD TEN
(1929)

(Sht. 1)

WORLD'S RECORD SUPER

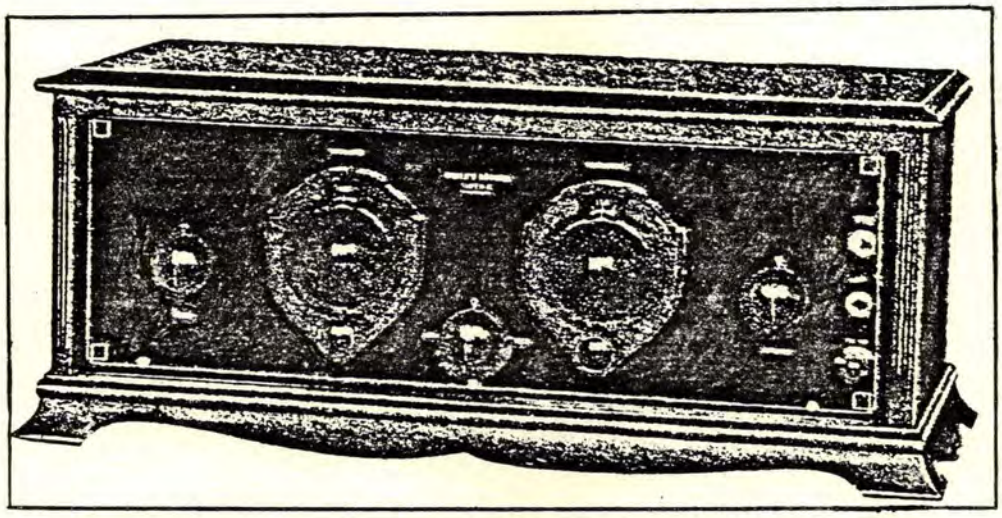

GENERAL PARTS LIST

1. Panel = 7"x21" Baseb'd. = 9"x20"x ½"
2. REMLER Variables .0005 (2).
3. FROST #600 Sockets (8).
4. THOR Coupler #460.
5. X-L Variodenser, Type N.
6. SCOTT "Selectone" Xfrmrs. #400
7. " " " #410
8. JONES Multiplug.
9. Kurz-Kasch "Aristocrat" Dials (2).
10. .1 MFD Condensers (2).
11. .00025 " (2). 500K Pot.
12. .002 " . (2) RAULAND AF Xfrmrs.
13. .001 " . Single Circuit Jack.
14. .005 " . FIL Switch.
15. 2M Ω Grid-Leak.
16. Binding Posts (6).
17. AMPERITES 1-A & 112.

(Original Kit Cost = $86.60.)

THOR CPLR.
200-500 M
$3.50
(1925)

(SCOTT FILE)

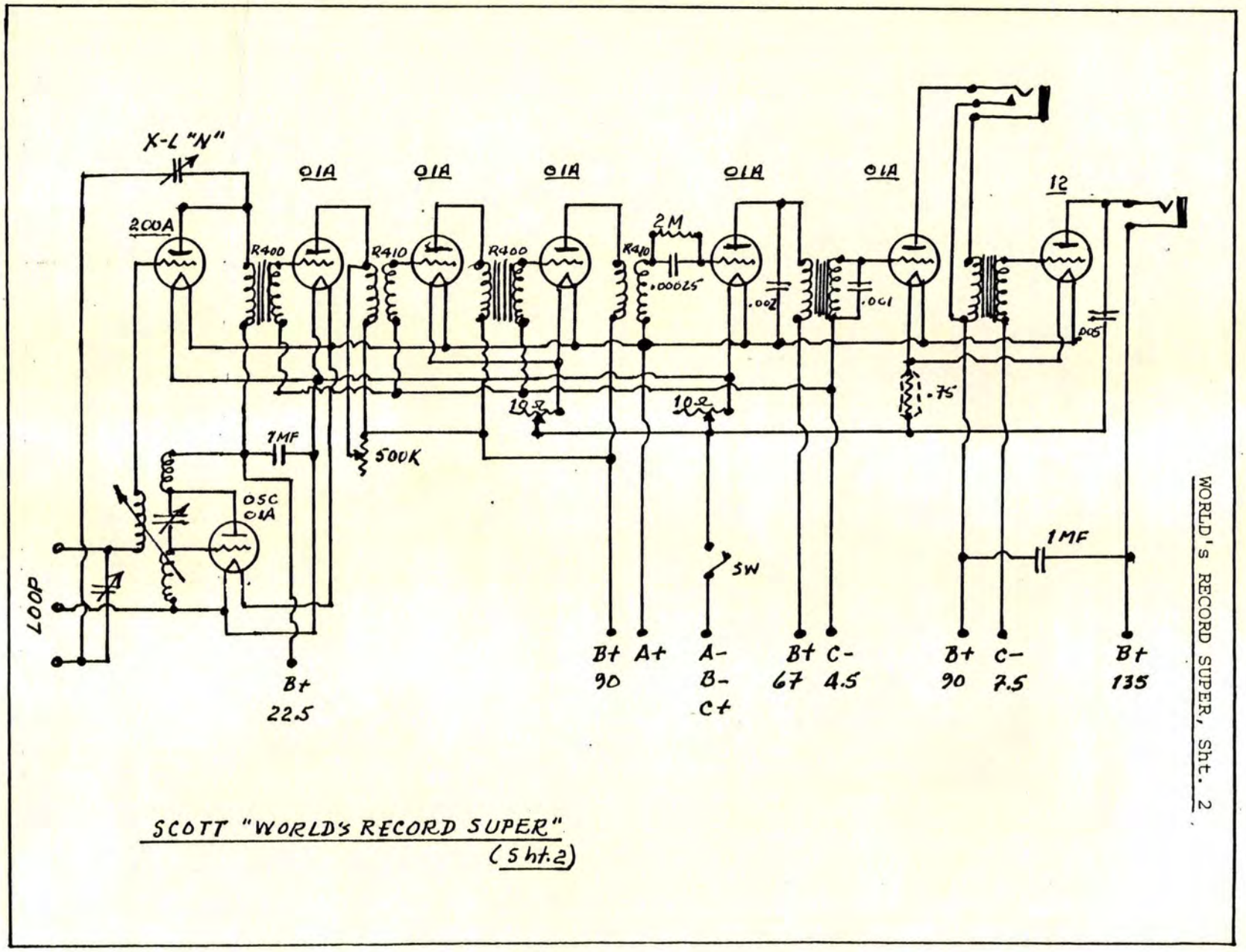

SCOTT "WORLD'S RECORD SUPER"
(Sht.2)

WORLD's RECORD SUPER, Sht. 2

WORLD's RECORD SUPER 8, Sht. 2

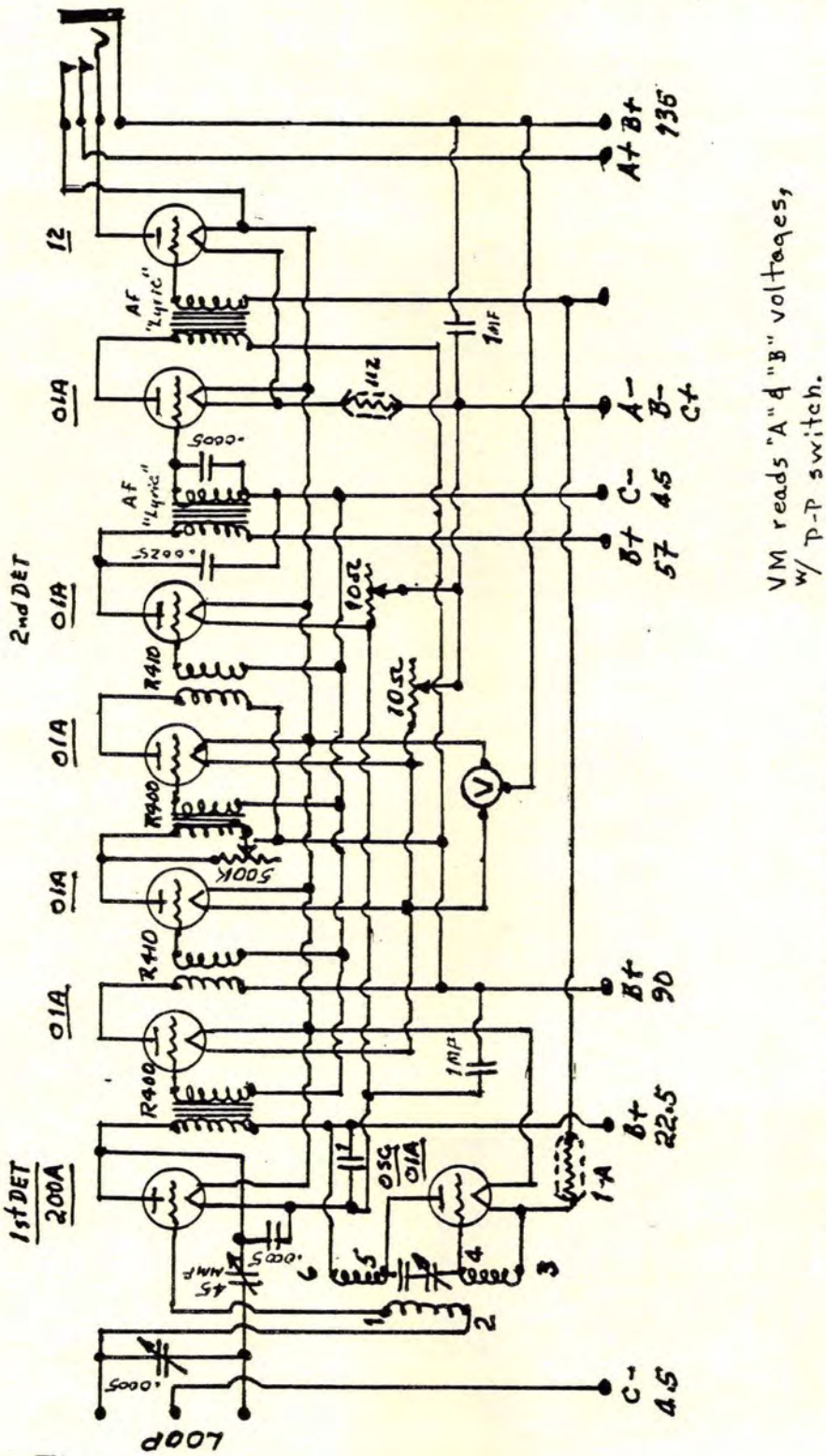

SCOTT "WORLD'S RECORD SUPER 8" (Sht.2)

SCOTT WORLD's RECORD S.G. NINE, 1929;Sht.1

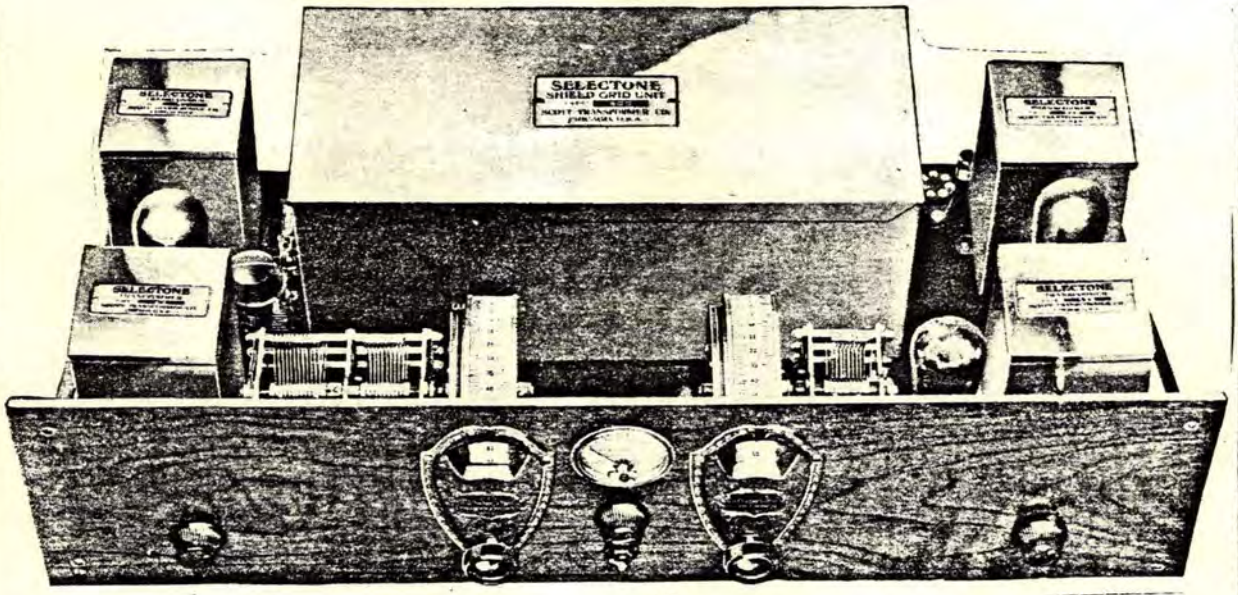

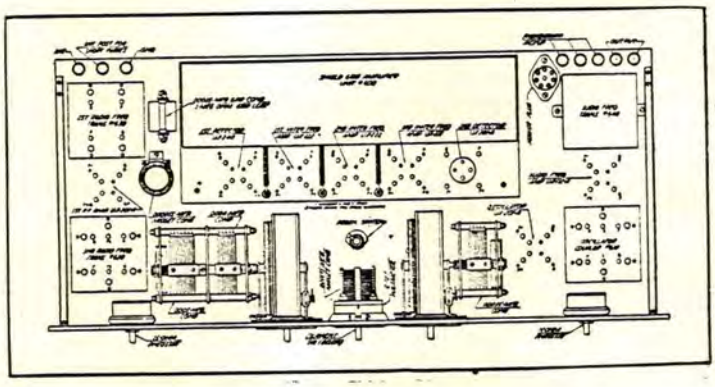

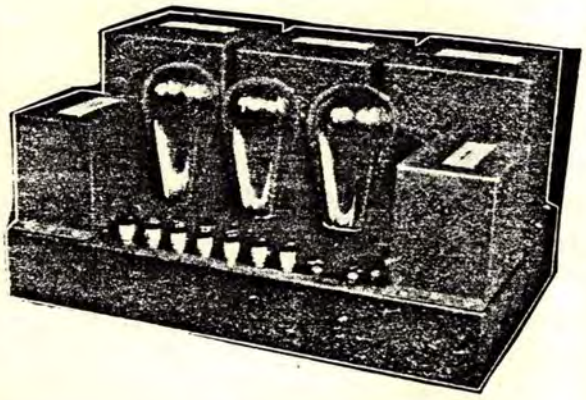

SCOTT WORLD's RECORD SUPER 10, 1929:Sht.1

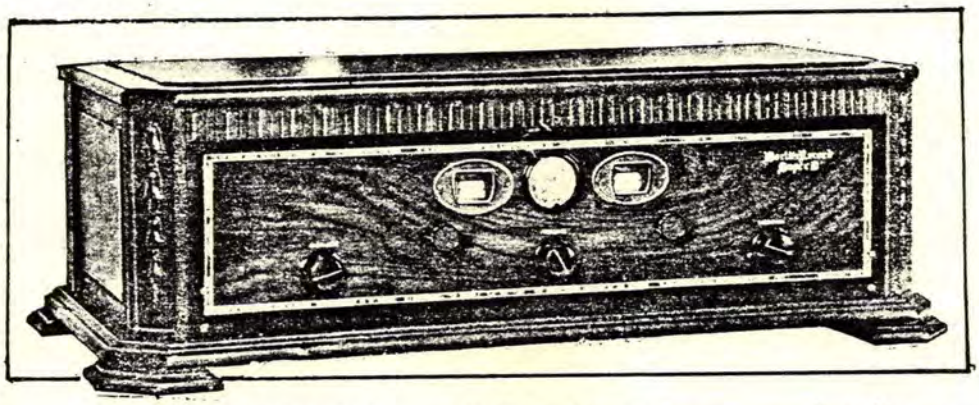

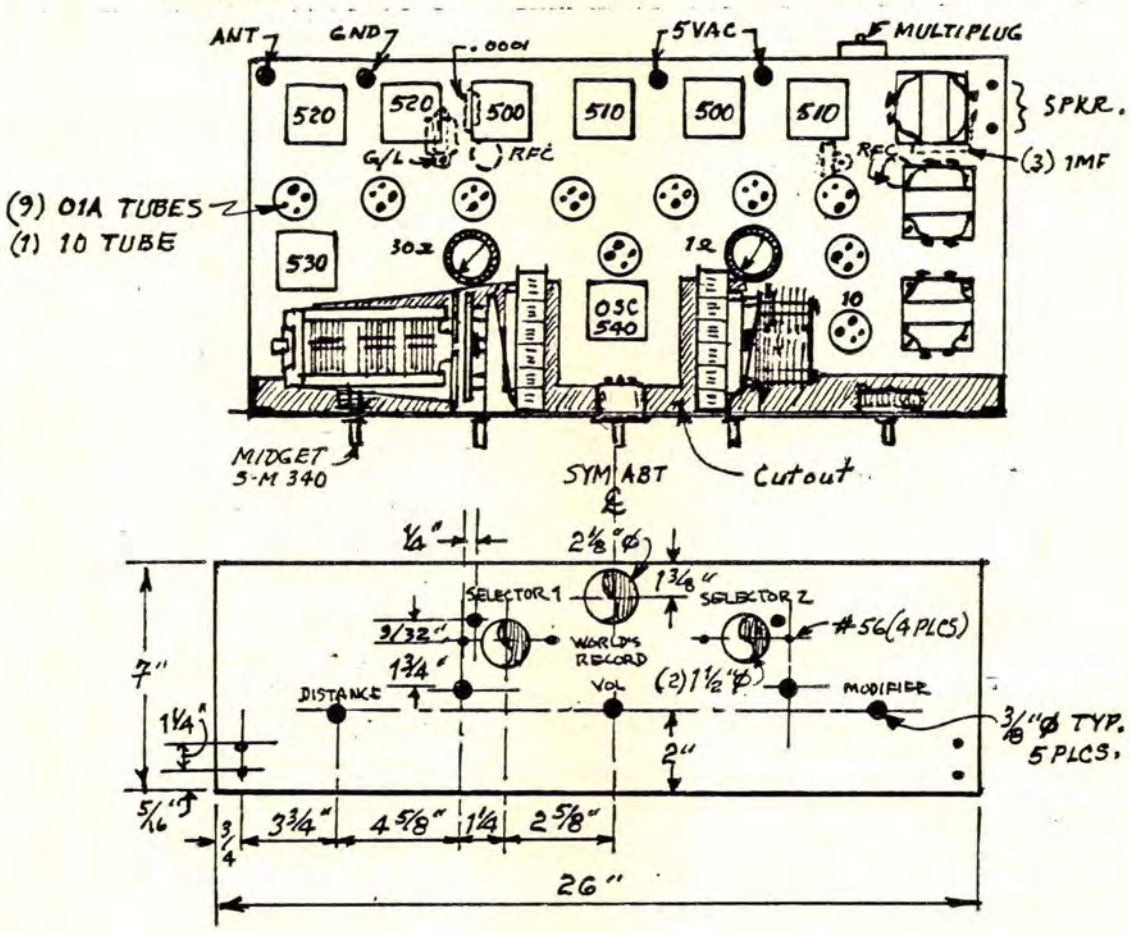

(CB·9·27)

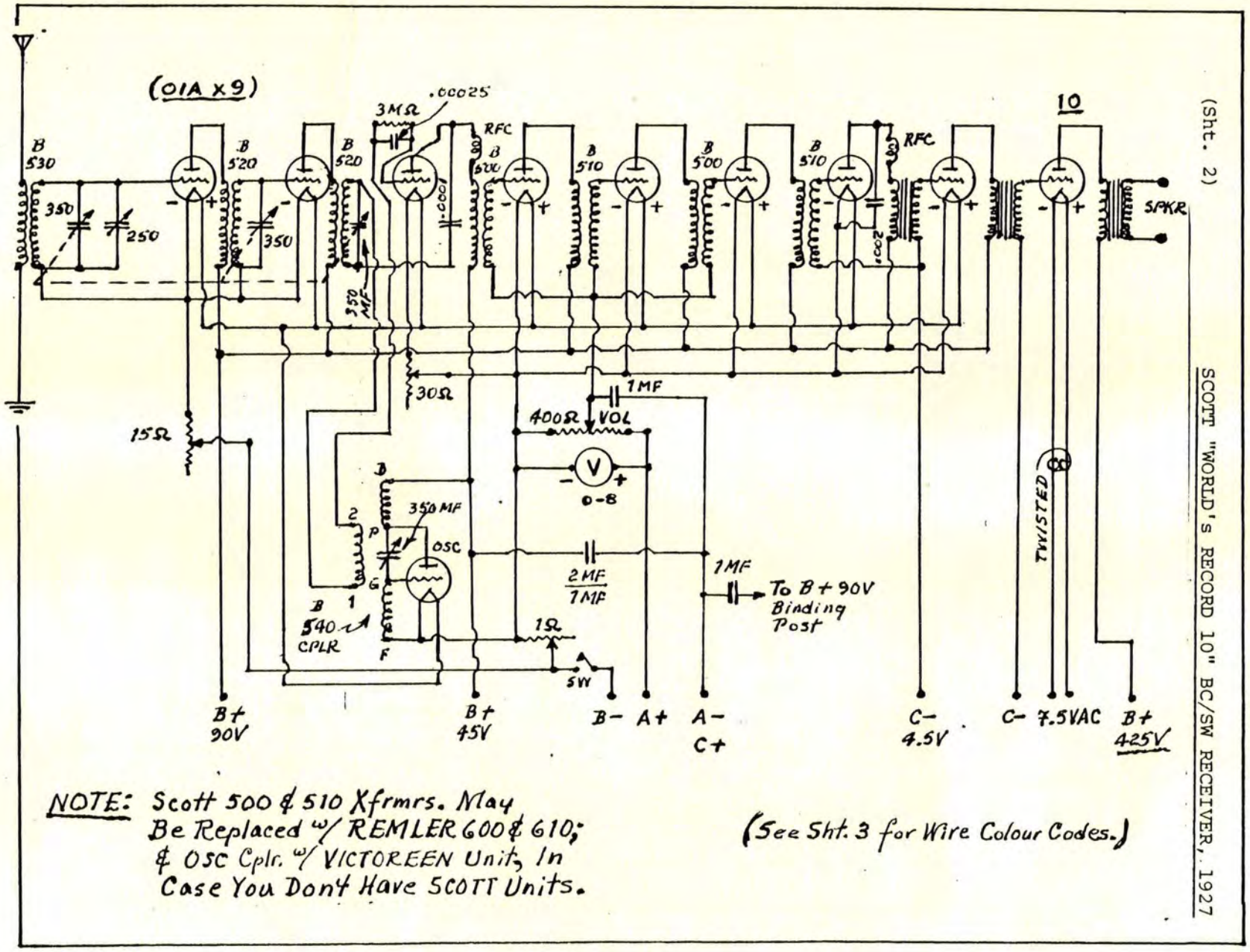

(Sht. 2)

SCOTT "WORLD's RECORD 10" BC/SW RECEIVER, 1927

NOTE: Scott 500 & 510 Xfrmrs. May Be Replaced w/ REMLER 600 & 610; & OSC Cplr. w/ VICTOREEN Unit, In Case You Don't Have SCOTT Units.

(See Sht. 3 for Wire Colour Codes.)

(Sht. 3) SCOTT "WORLD's RECORD 10" BC/SW RECEIVER, 1927

ORIGINAL WIRE COLOUR CODE:

A-	=	Green
A+	=	Red
B-	=	Yellow
B+ 45V	=	Blue
B+ 90V	=	Pink
B+ 425V	=	Brown
C+	=	Black
C- 4.5V	=	Black
C- (Elim.)	=	White

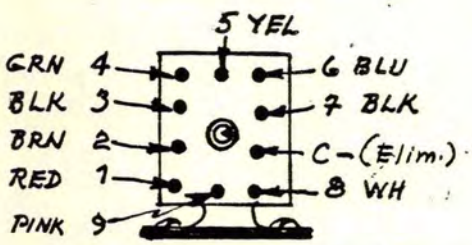

MULTIPLUG COLOUR TERMINALS

PRINCIPLE PARTS LIST

REMLER 3-Gang Variable, 350mfd each sexion.
" 350mfd Variable.
" Universal Drum Dials (2).
" RFC #35 (2).
SCOTT "Selectone" Xfrmrs. B-500 (2)
B-510 (2)
B-520 (2)
B-530
B-540
THORDARSON AF Xfrmr. R-200 (2).
" . Output Xfrmr R-76.
S-M #340 Midget Variable.
JONES 10-pt. Multiplug.
JEWELL #135 DC Voltmeter.
X-L Binding Posts (4).
ACME "Celesite" Wire, 40-feet.
BENJAMIN Sub-Panel Brackets #8629.(2).
KELLOGG Soldering Lugs (60).

PANEL = 7" x 26" x 3/16", "Formica".

SUB-PANEL = 10" x 26" x 3/16", "Formica".

(See EARLY SCOTT Monograph.)

SCOTT SHIELD-GRID AC "SYMPHONY", 1927

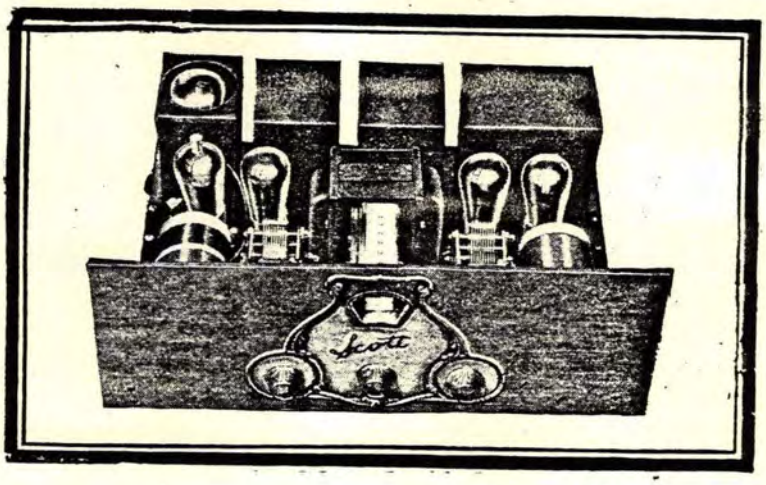

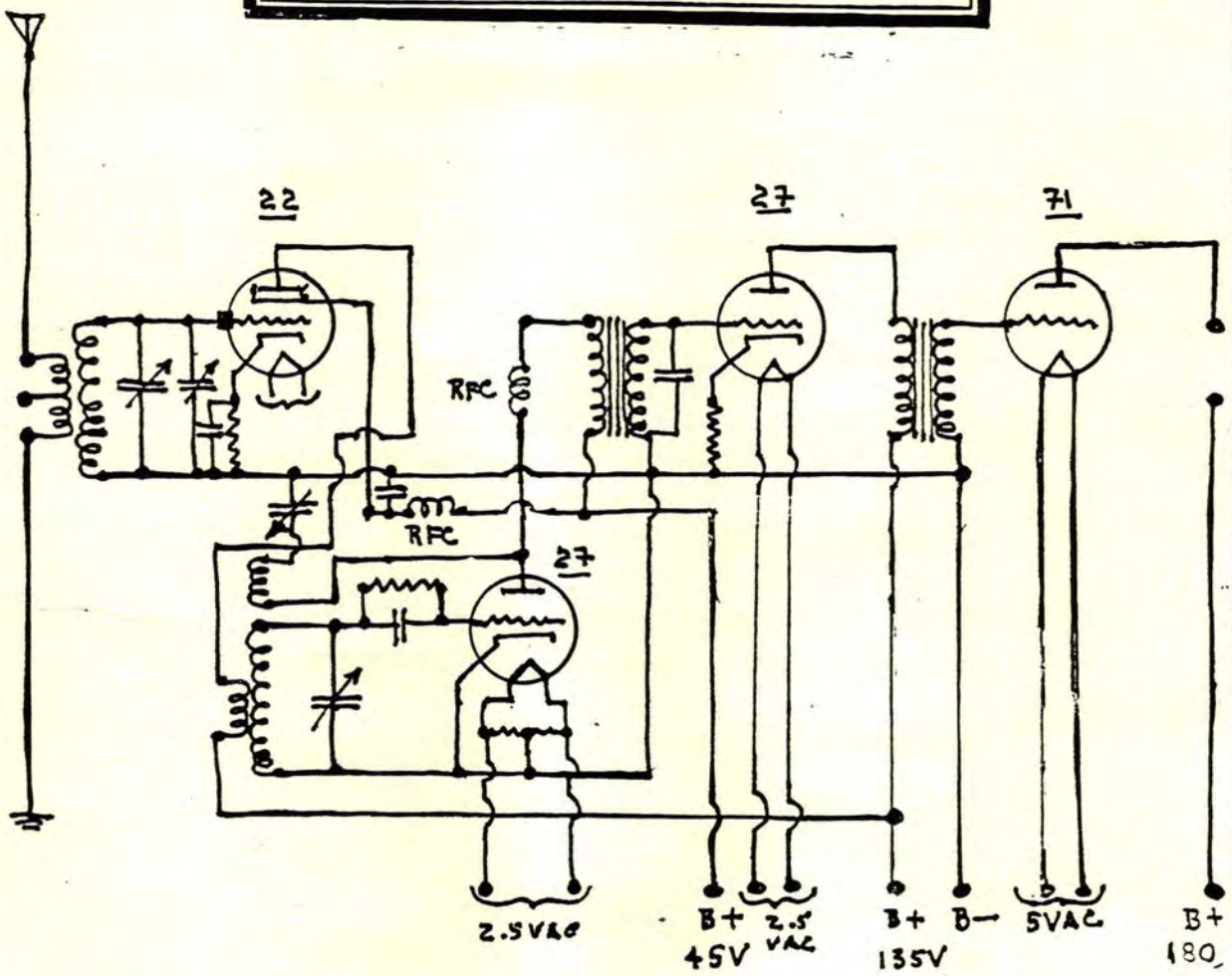

(A DC model was also available, with (3) 01A, 71A tubes.)

SCOTT S.G. AC "SYMPHONY", Sht. 2

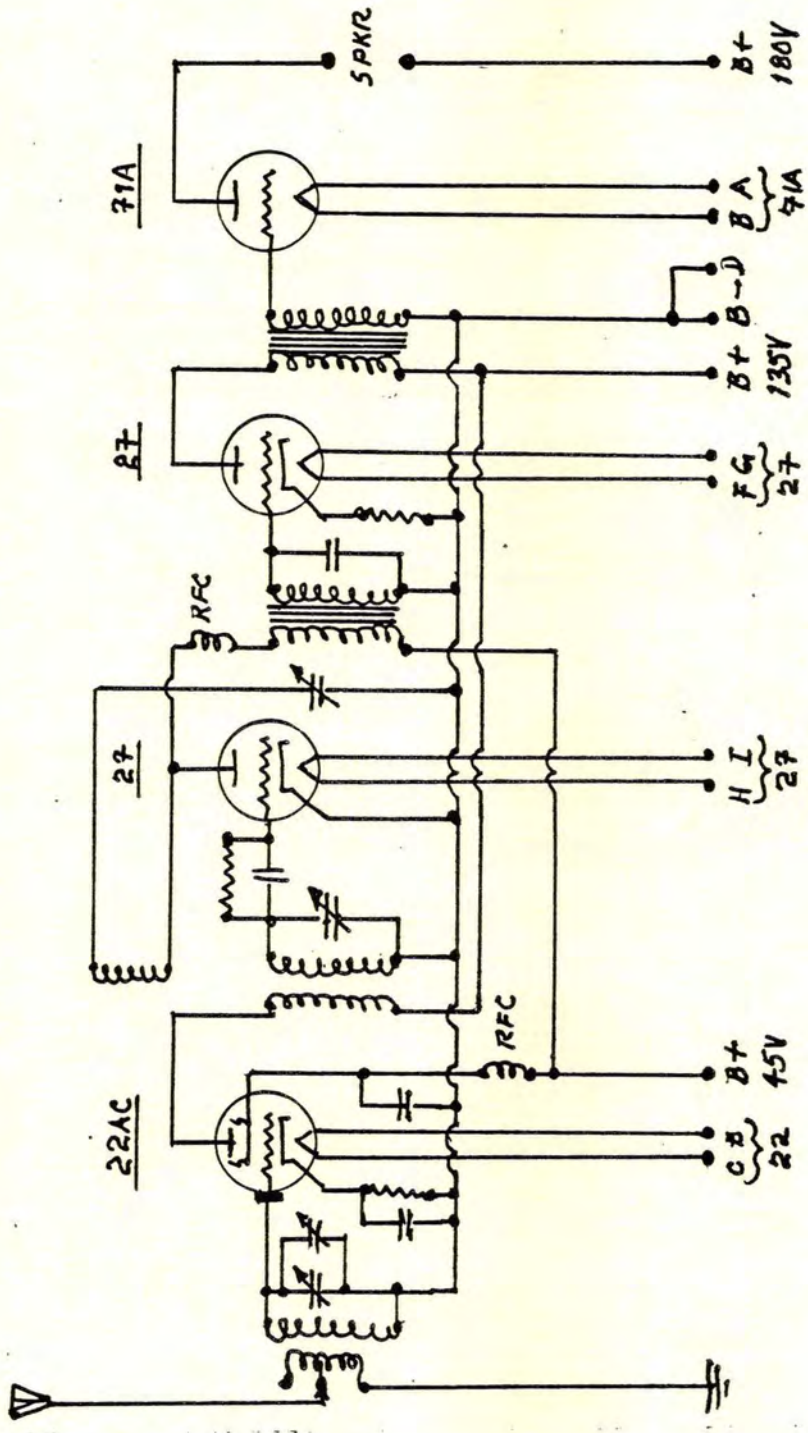

SCOTT S.G.AC "SYMPHONY"

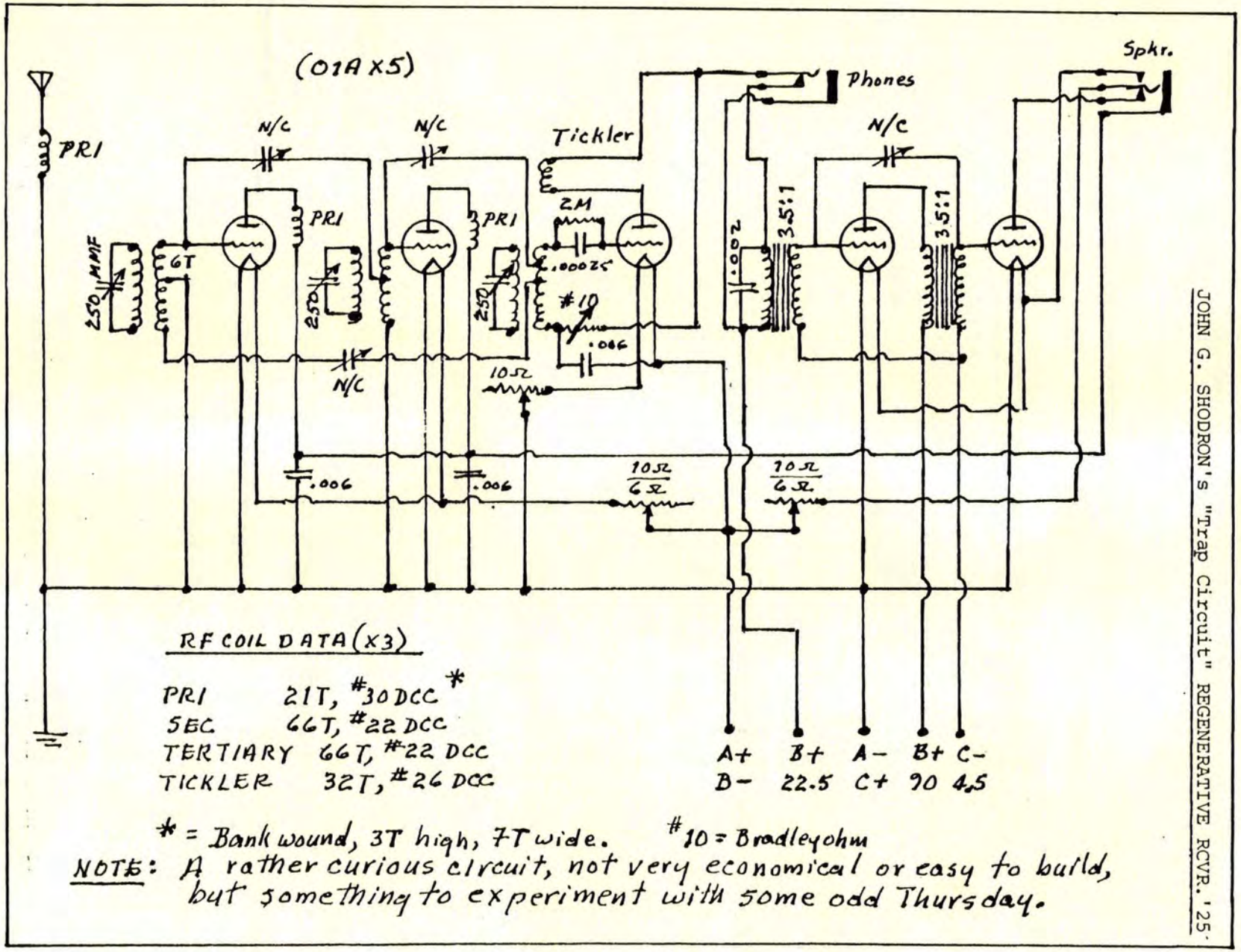

JOHN G. SHODRON's "Trap Circuit" REGENERATIVE RCVR. '25

SICKLES 4-TUBE RECEIVER; 1926

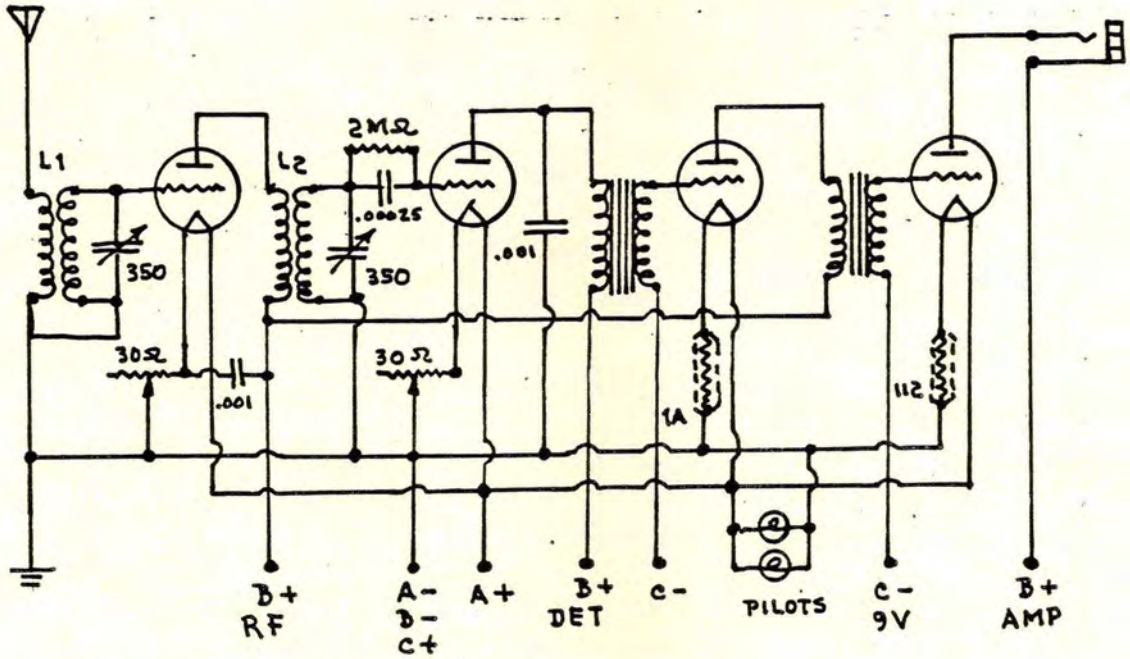

L1, L2 = SICKLES #30 SHIELDED COILS.
THORDARSON R-200 AF XFRMRS.
MAR-CO ILLUMINATED DIALS.

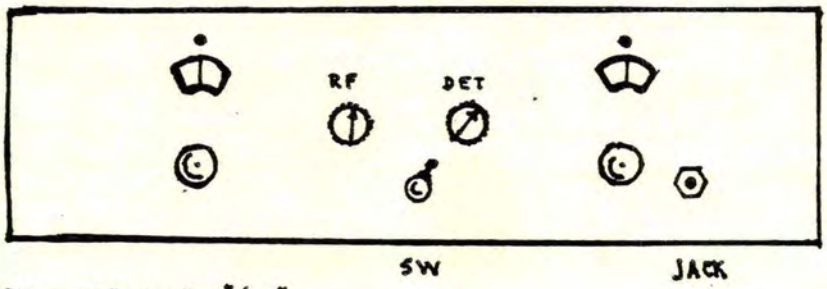

PANEL= 7"x21"x 3/16"
BASEBOARD = 9.5" x 20" x 1/2"

(RW 11·13·26)

SILVER LONG WAVE RECEIVER, 1926

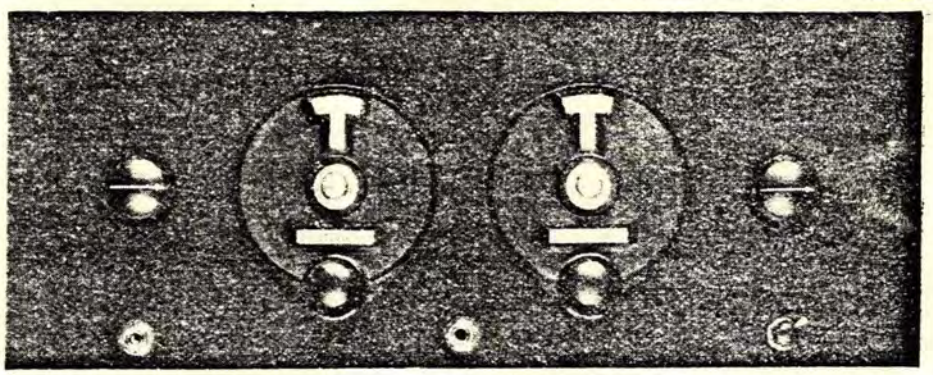

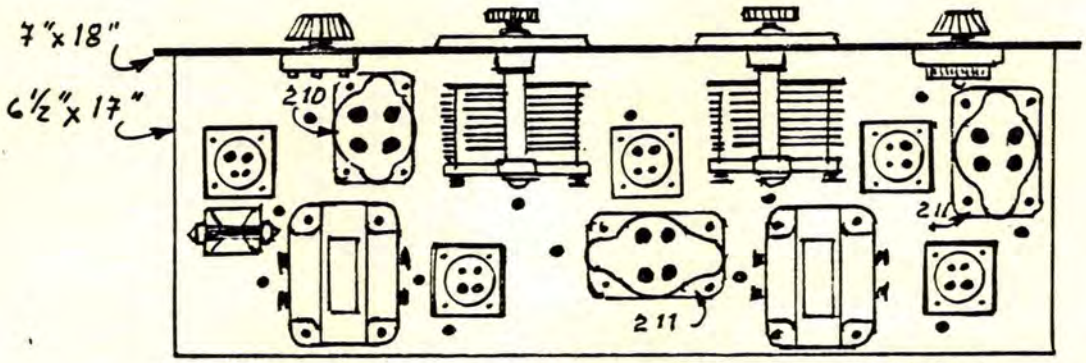

THORDARSON
AF XFRMS.

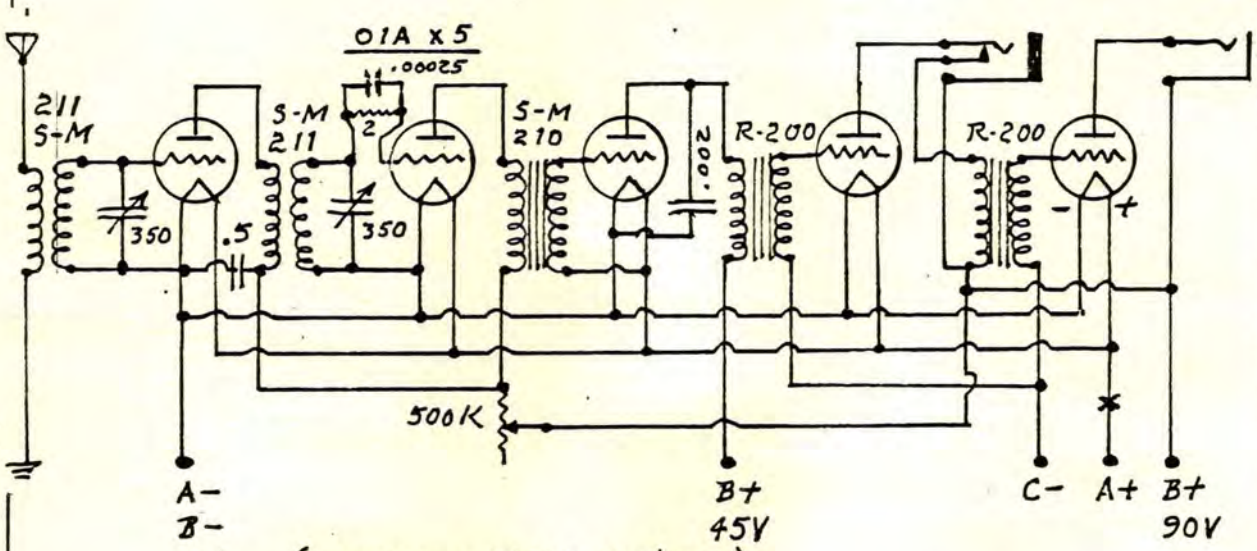

(4500 TO 15000 Meters.)

(CB 6-26)

SILVER-MARSHALL "SILVER SIX". 1926
(Sht. 1)

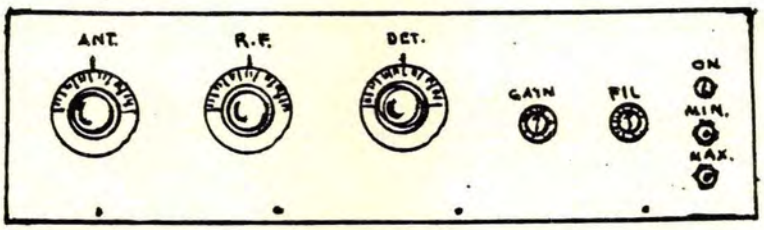

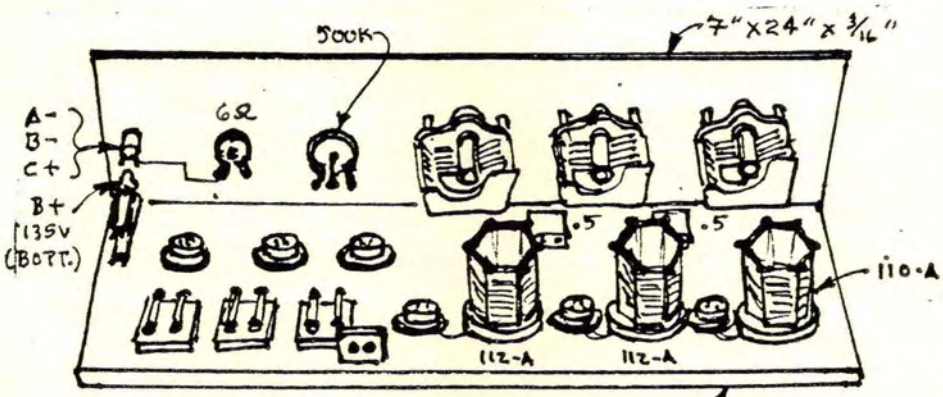

REAR VIEW

(RLG 3-26)
(RN 8-26)

SILVER SIX T.R.F.; 1926
50 to 600 Meters (Sht 2)

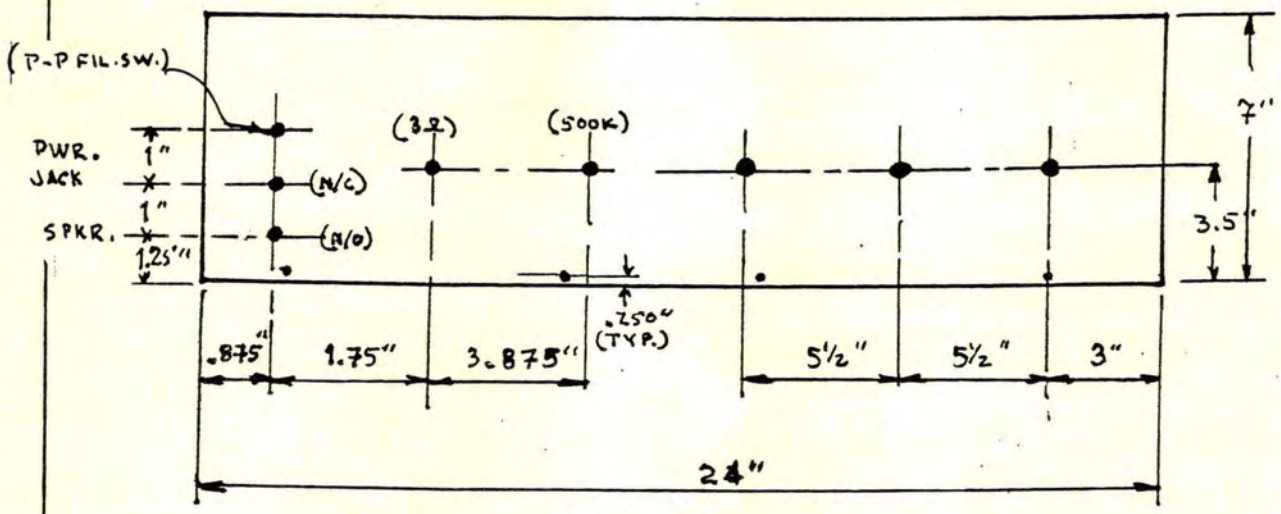

BACK OF PANEL

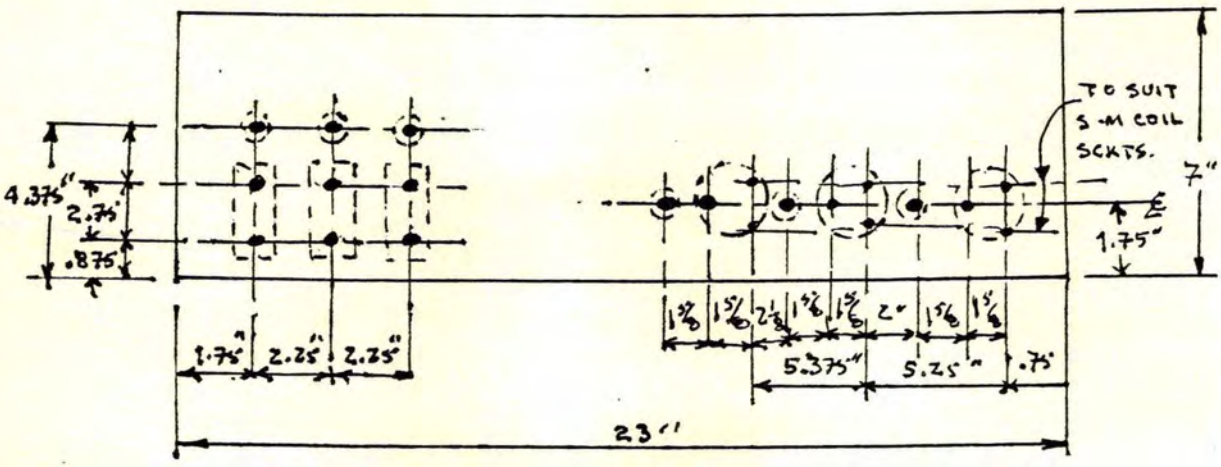

BASEBOARD

SILVER-MARSHALL "SILVER SIX", 1926
(Sht. 3)

GENERAL NOTES:

1. Tubes = (5) 01A; 12. (Musselman 5VA & 5VC may be used, if you have them; or (5) 99's and a 120 with dry-cells. The Musselman 3VA tubes were the same as the 99.
2. Use square buss-bar for wiring.
3. S-M coils: (2) 112-A; 110-A (ANT).
4. S-M 510 tube sockets.
5. S-M 515 coil sockets.
6. BC bands only covered by the coils listed above. For 90-210 meters reception, substitute one 110-B and two 112-B coils. For 50-110 meters, use one 110-C and two 112-C coils - all made by S-M.
7. Daven resistance-couplers were used: (3) 100K; 250K; 500K; 1Megohm.

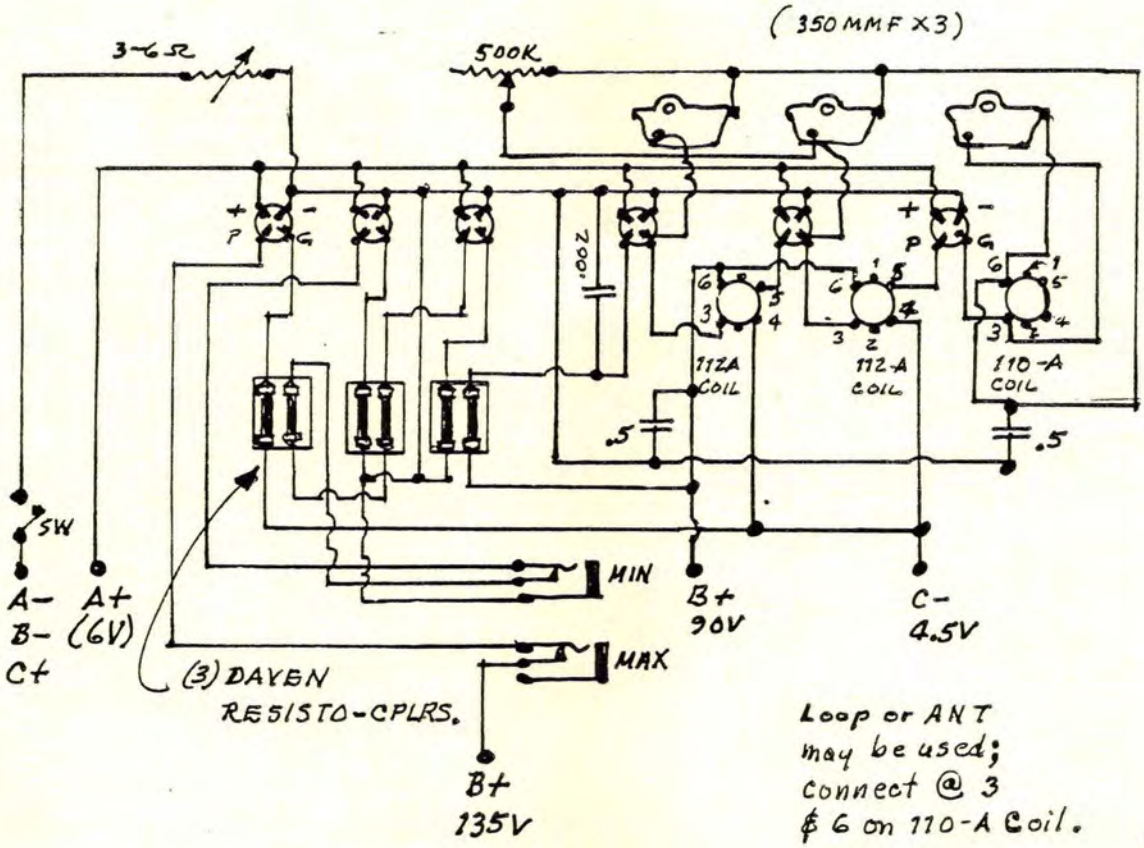

SILVER-COCKADAY TRF, 1926; Sht. 1

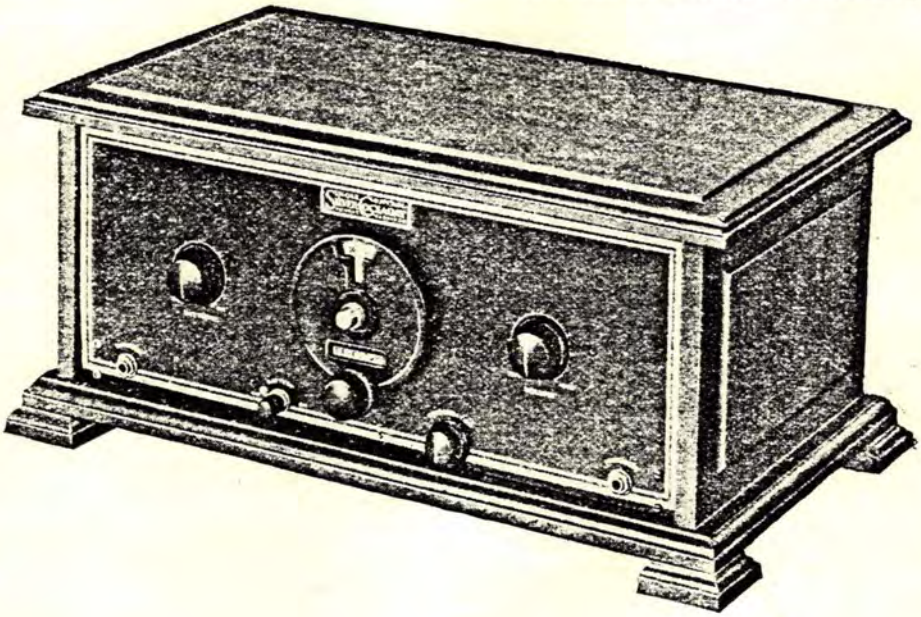

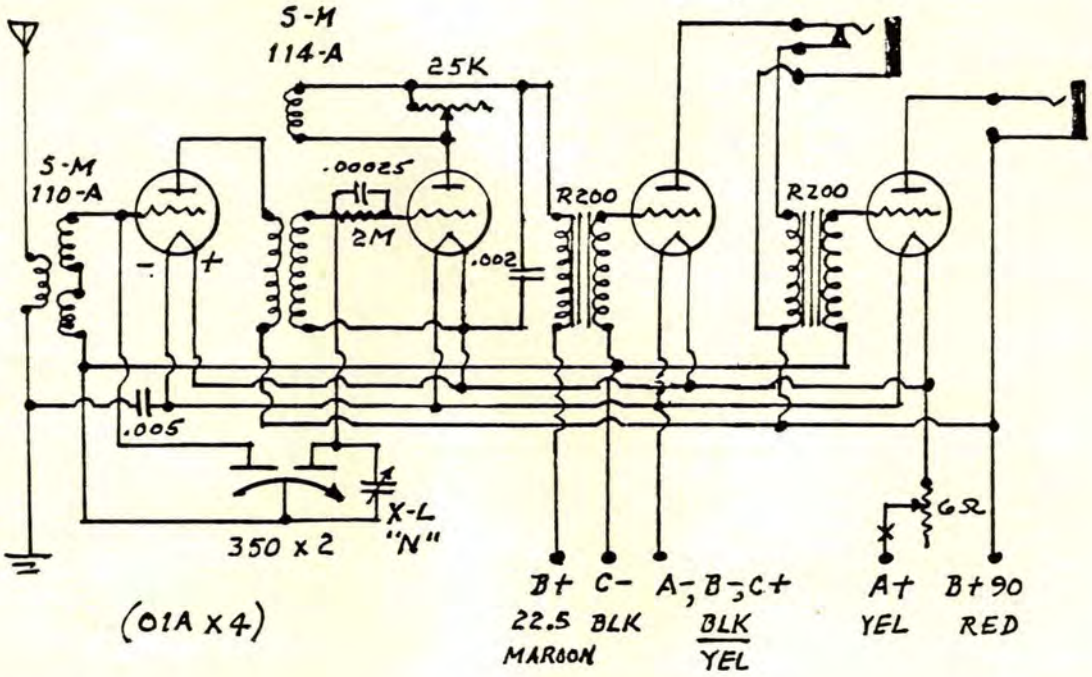

(CB6-26)

FIRST VERSION

SILVER-COCKADAY "S-C" RECEIVER, 1926
(Sht. 2)

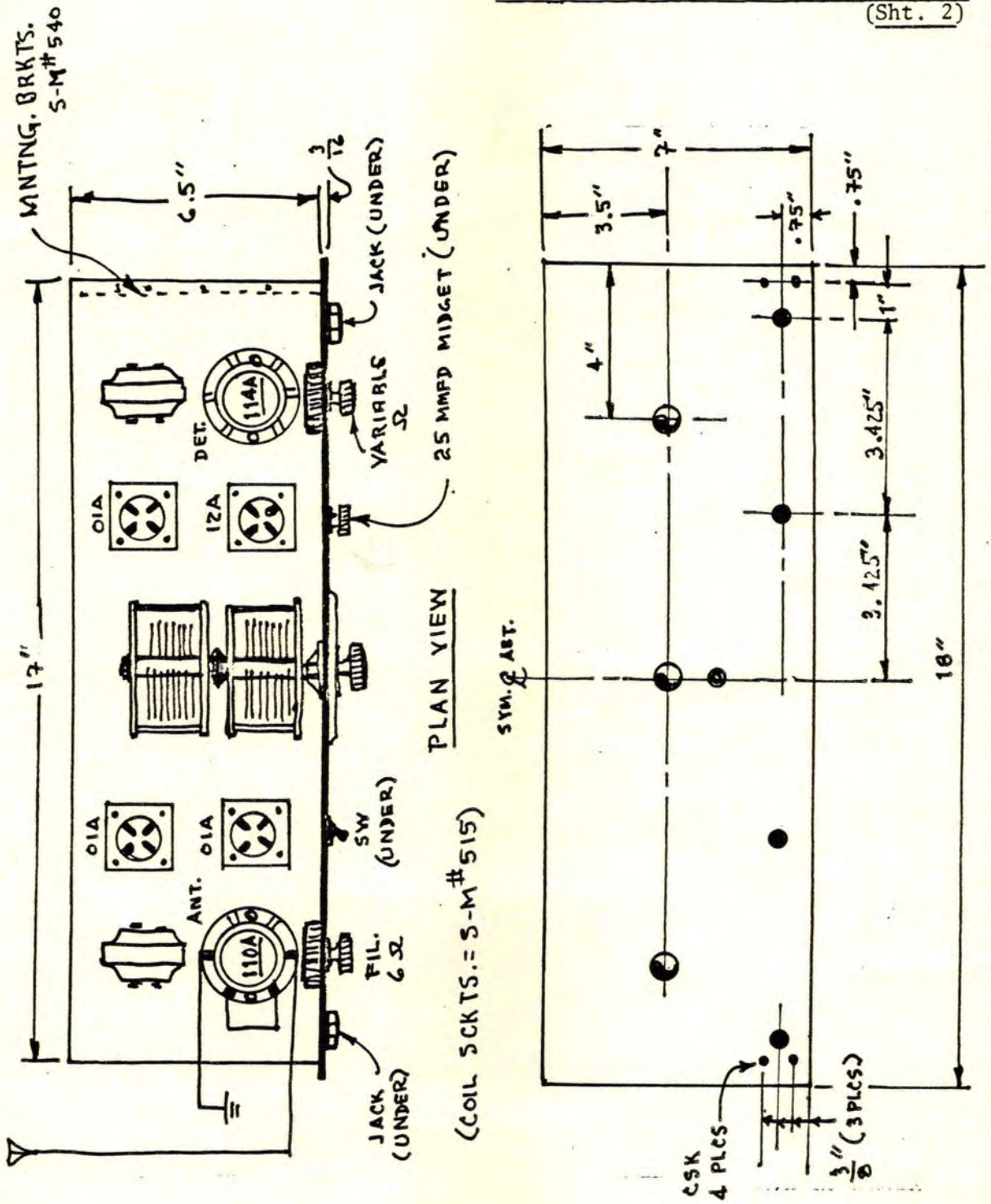

SILVER-COCKADAY TRF, 1926; Sht. 3

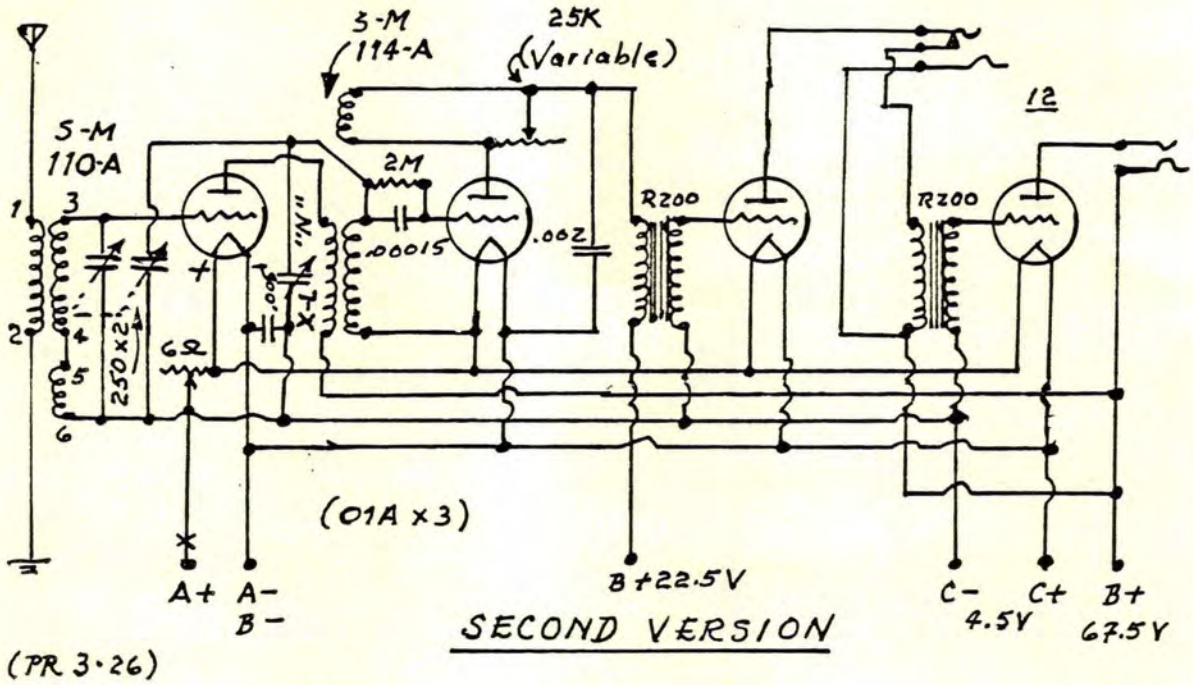

The two versions of the S-C receiver are essentially the same, the chief differences occurring in the value of the variable condensers, and the over-all size of the panel and chassis - e.g., the first panel was 7" x 18"; the second panel was 6½" x 18". The midget variable originally 25 MMF may be replaced with an X-L Type N Variodenser, if more convenient.

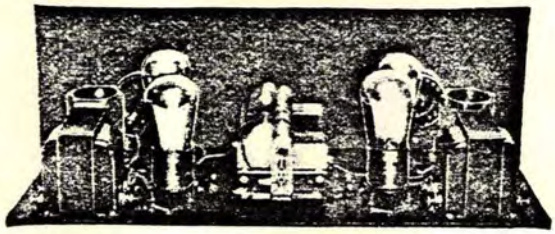

REAR VIEW - BOTH VERSIONS

SILVER SUPER-HET PORTABLE, 1925

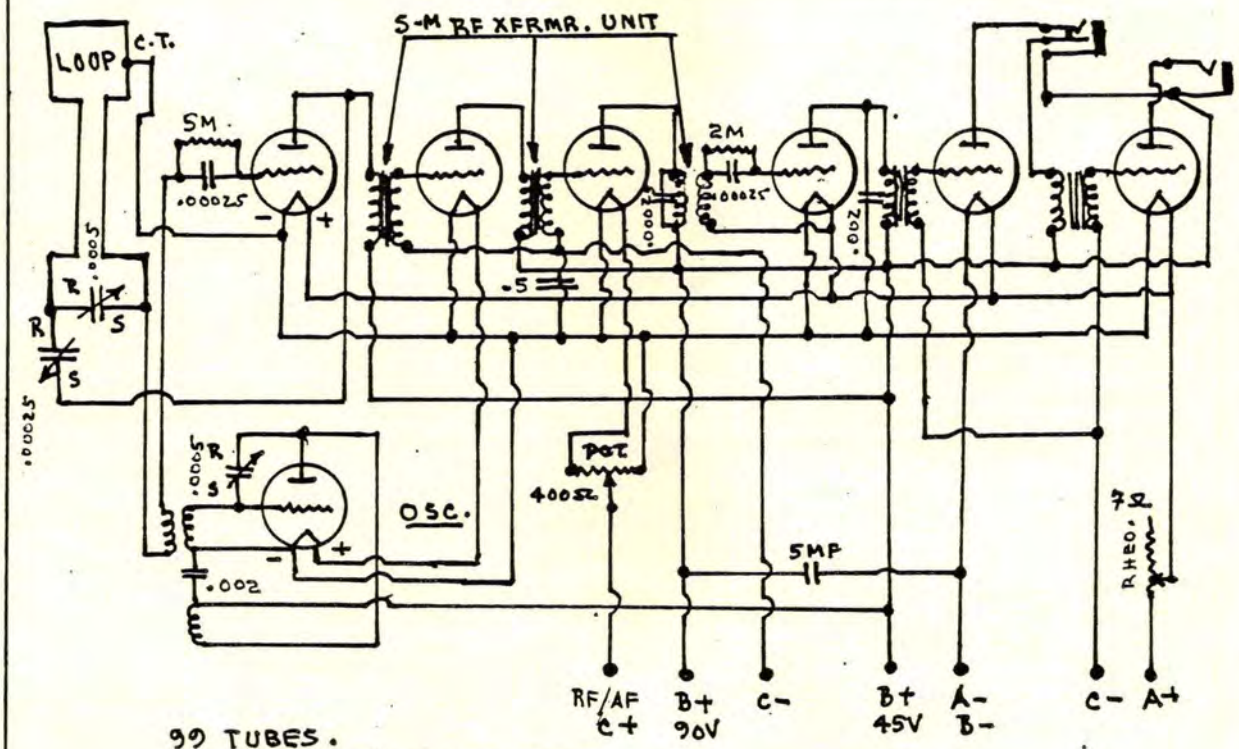

99 TUBES.
WIRE = #20 ~ #22 BUSS-BAR.
50KC AMPLIFIER (POTTED S-M UNIT).
PANEL = 7" x 18".

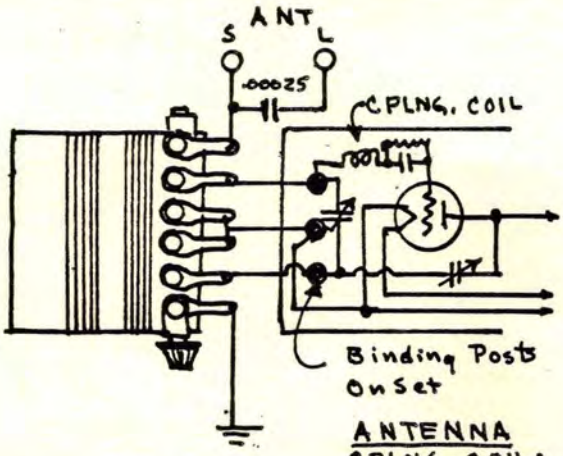

1st DET

ANTENNA CPLNG. COIL:
1. 50T #24 DCC 3"Ø.
2. 10T PRI WOUND ON SAME COIL, ANT & GND.

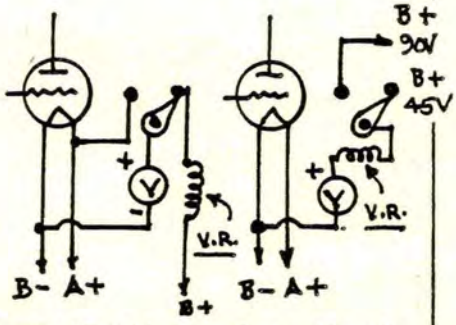

2-RANGE VM FIL & PL VOLT.

1-RANGE VM DET PL VOLT.

V.R. = Voltmeter Resistor: 500T #36E nam., 3"Ø.

(6-13-25 RW)

SILVER-MARSHALL LAB SUPER-HET, 1927
(Sht. 1)

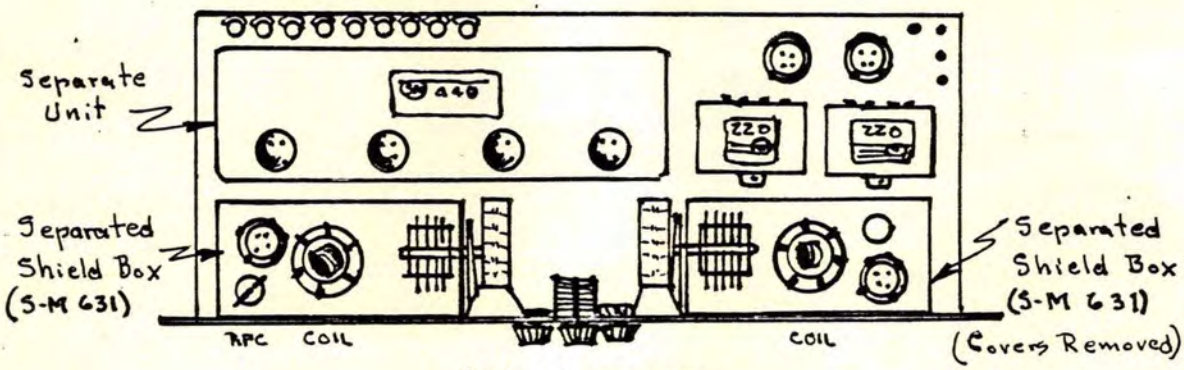

1927 LAYOUT

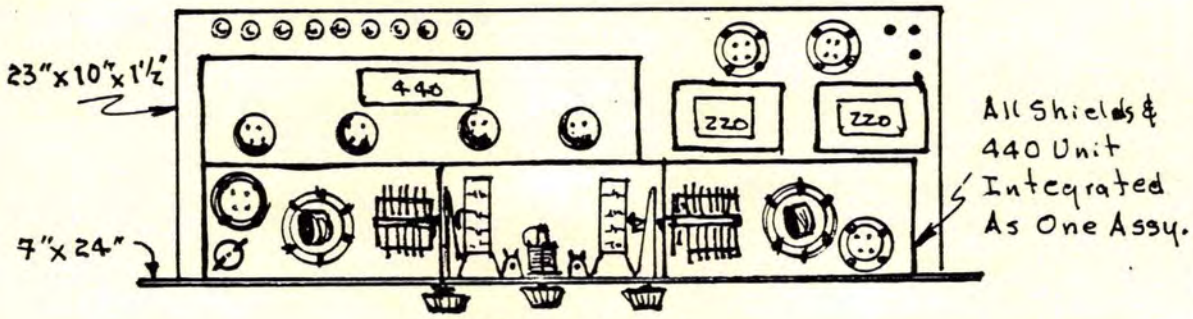

1928 LAYOUT

(30-3,000 Meters)

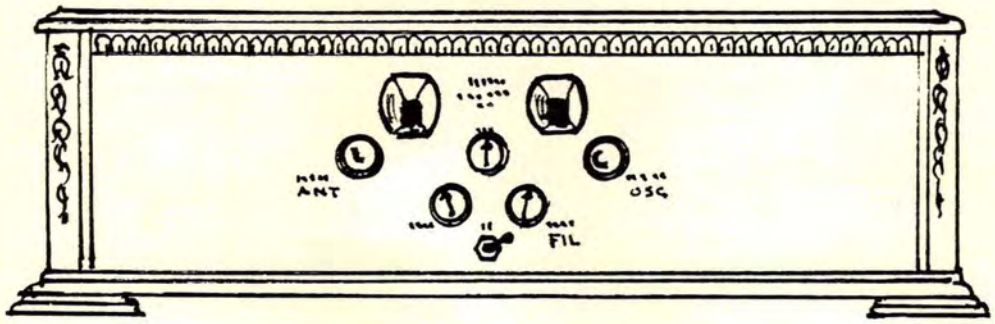

1927 FRONT PANEL
(In Corbett "C" Cabinet)

SILVER-MARSHALL LAB SUPER-HET, 1925
(Sht. 2)

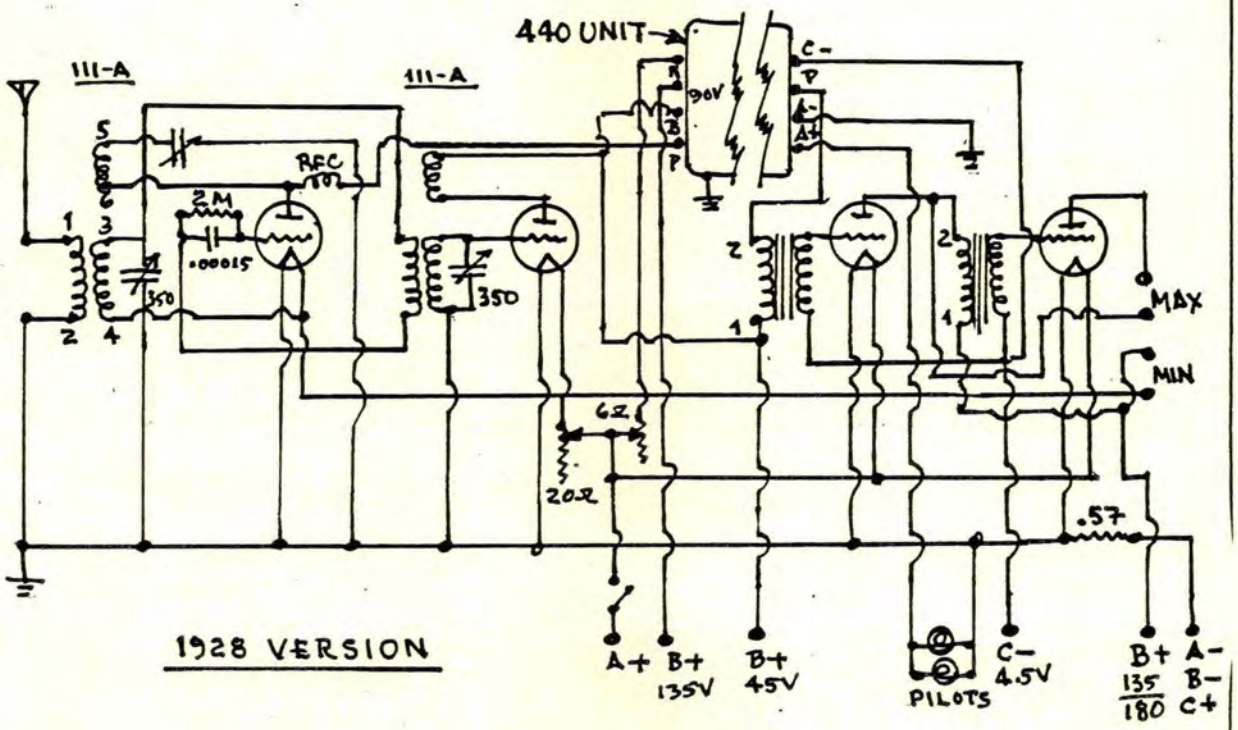

1928 VERSION

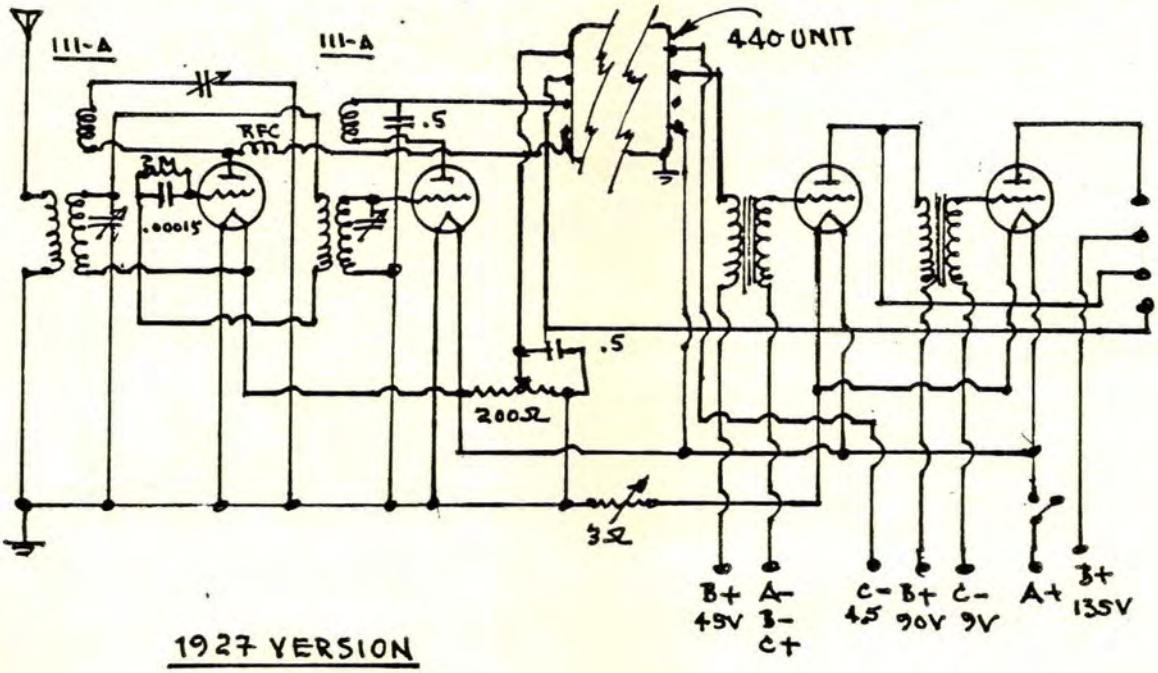

1927 VERSION

SILVER-MARSHALL LAB SUPER-HET, 1927
(Sht. 3)

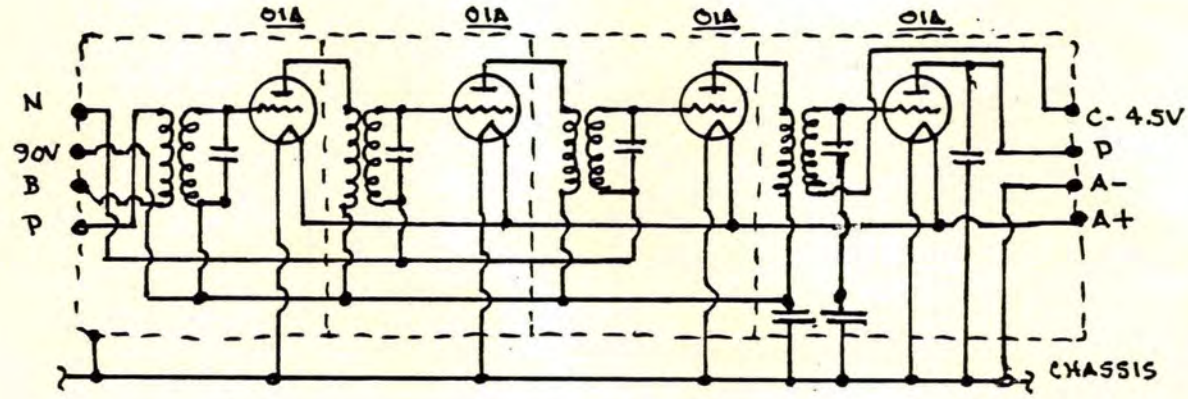

1927 TIME SIGNAL AMPLIFIER (440)

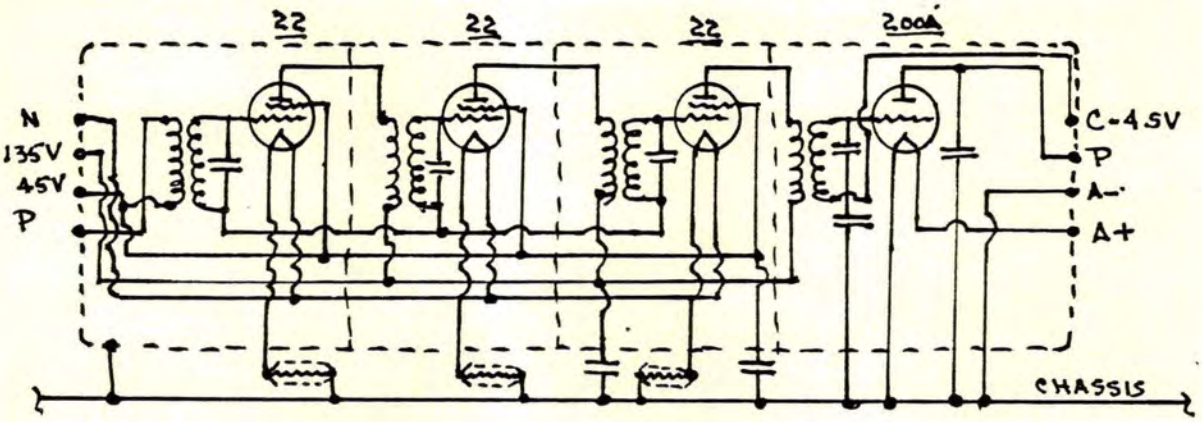

1928 TIME SIGNAL AMPLIFIER (440)
(See Also Page 303.)

Set was not a "one-spot" receiver between 215 and 455 meters, where stations will be found at two seperate points on the dial. Above or below 215 and 455 meters, stations will come in at one point only. Unit was contained in a plated copper case.

SILVER-MARSHALL LAB SUPER-HET, 1927
(Sht.4)

LIST OF PARTS

1928 Model

(2) 350 mmf Variables
.000075 mf Fixed Cond.
.00015 mf Fixed Cond.
RFC 2.5 mH
20-Ohm Rheostat
6-Ohm Rheostat
.57-Ohm Resistor
5M-Ohm Grid-Leak
(2) Al. Shields 7.75"x7.75"x5"
(2) Ce-Co "H" Tubes
(2) Ce-Co "F" Tubes
Ce-Co Power Tube
(2) Drum Dial, Single Action
Van Doorn Panel
(2) S-M 111-A Plug-In Coils
S-M 440 Amplifier
(9) Eby Binding Posts

1927 Model

(2) 350 mmf Variables
.000075 mf Fixed Cond.
.00015 mf Fixed Cond.
RFC S-M 275
200-Ohm Pot.
3-Ohm Rheostat
(2) .25 mf Cond.
2-Ohm Grid-Leak
S-M 805 Drum Dials
(2) S-M 111-A Coils
(9) X-L Binding Posts
Van Doorn Panel
S-M 440 IF Amplifier
(2) S-M 220 AF Xfrmrs.
(Incidental Hardward
not Listed.)

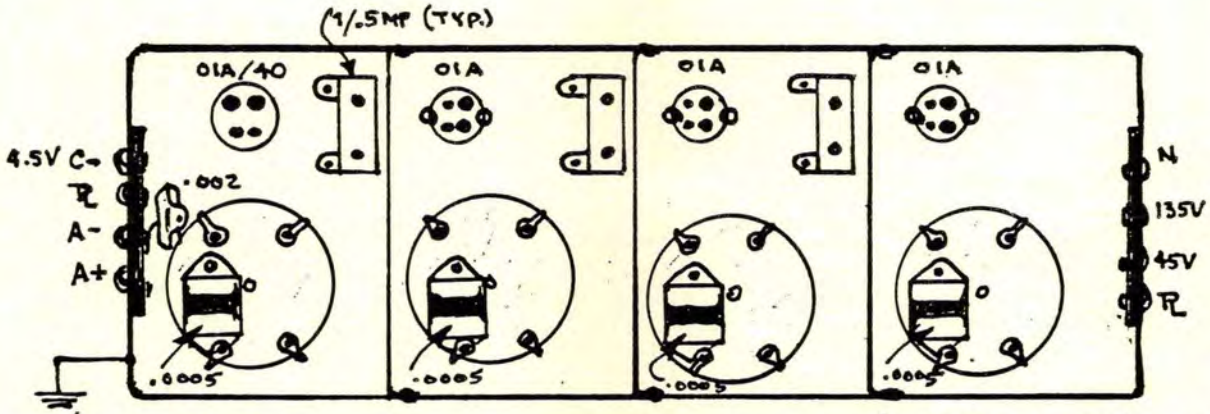

S-M 440 IF AMPLIER; 112 KC; 1927 (COVER REMOVED)

(15" x 5" x 5½")

1928 Version employed (3) 22 Ω a 200A, q.v.

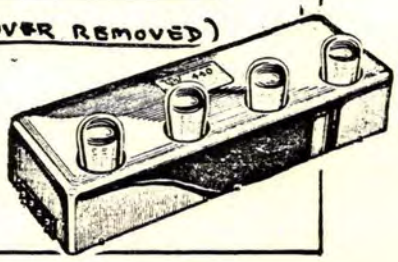

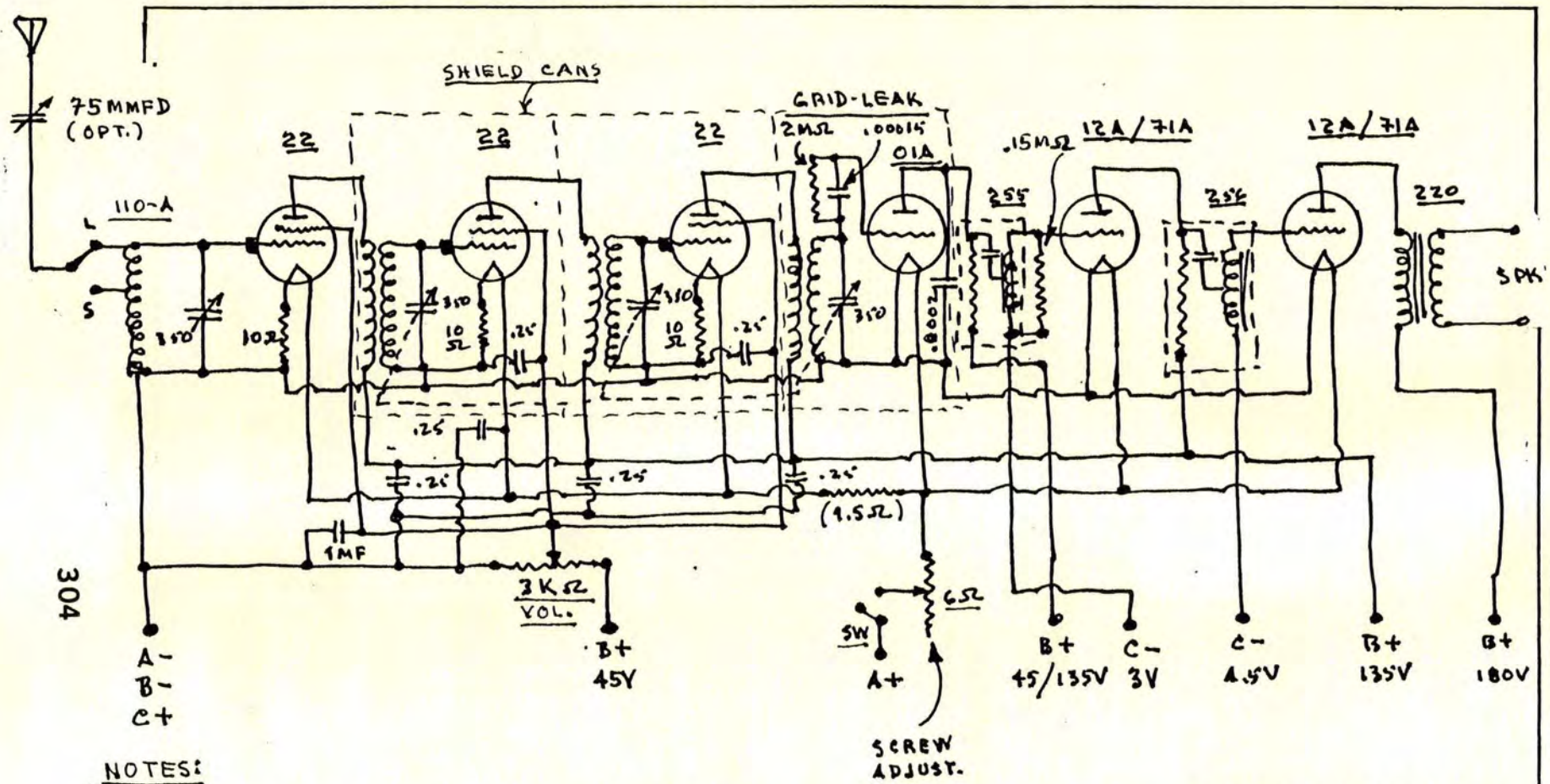

NOTES:

1. A 12A TUBE MAY BE USED AS DETECTOR.
2. 10 OR 50 PWR. TUBES MAY BE USED, W/ PROPER VOLTAGES.
3. 6Ω POT. IS OPTIONAL.
4. IF 75 mmf VARIABLE IS USED, DELETE ANT. SW.
5. S-M COIL 140 MAY BE USED IN LIEU OF 110-A.
6. REFER TO VOL. IV FOR POWER SUPPLY SCHEMATIC.

(6) .25 MFD COND.
(3) 10Ω RESIST.
1 MFD BY-PASS
1.5Ω RESIST.
.0002 MFD BY-PASS
.15 MΩ RESIST.

S-M "SHIELDED SIX" w/ 22 TUBES, 1926; Sht. 1

S-M "SHIELDED SIX" AC MODEL, Sht. 2

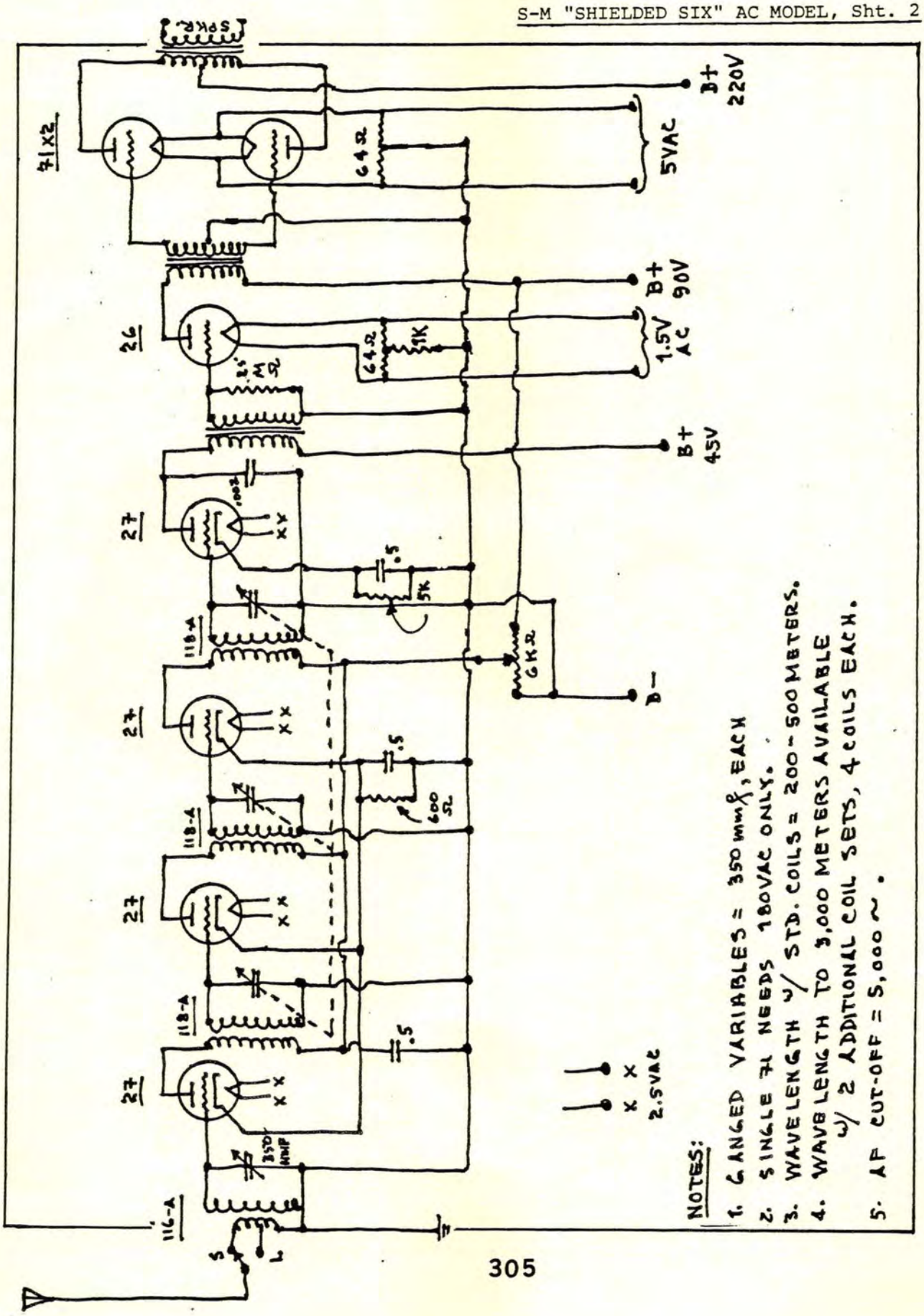

S-M "SHIELDED SIX", BATTERY MODEL, Sht. 3

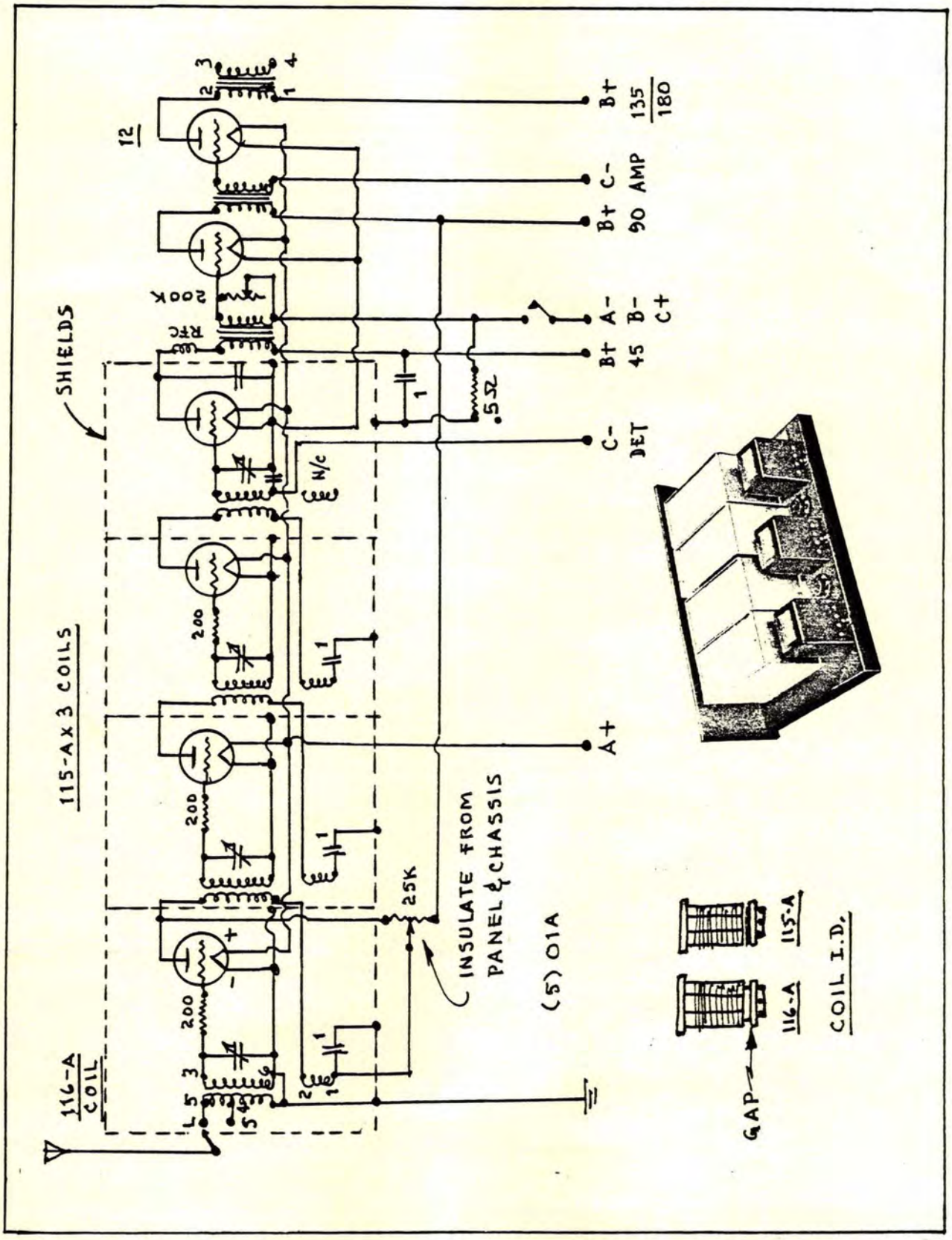

S-M "SHIELDED SIX" MODEL 630, 1928; Sht. 4

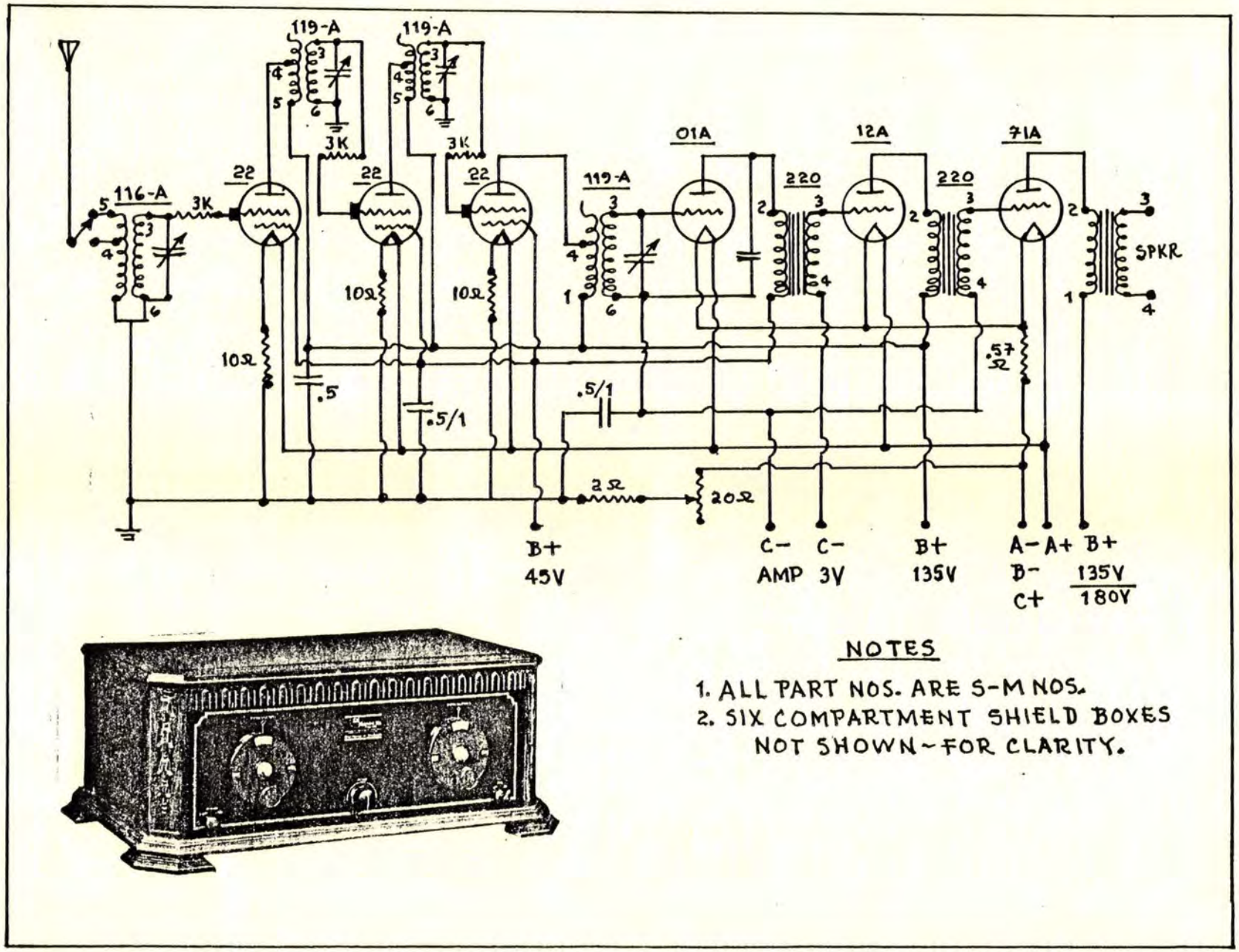

S-M SCREEN-GRID SUPER-HET RCVR., 1928;Sht.1

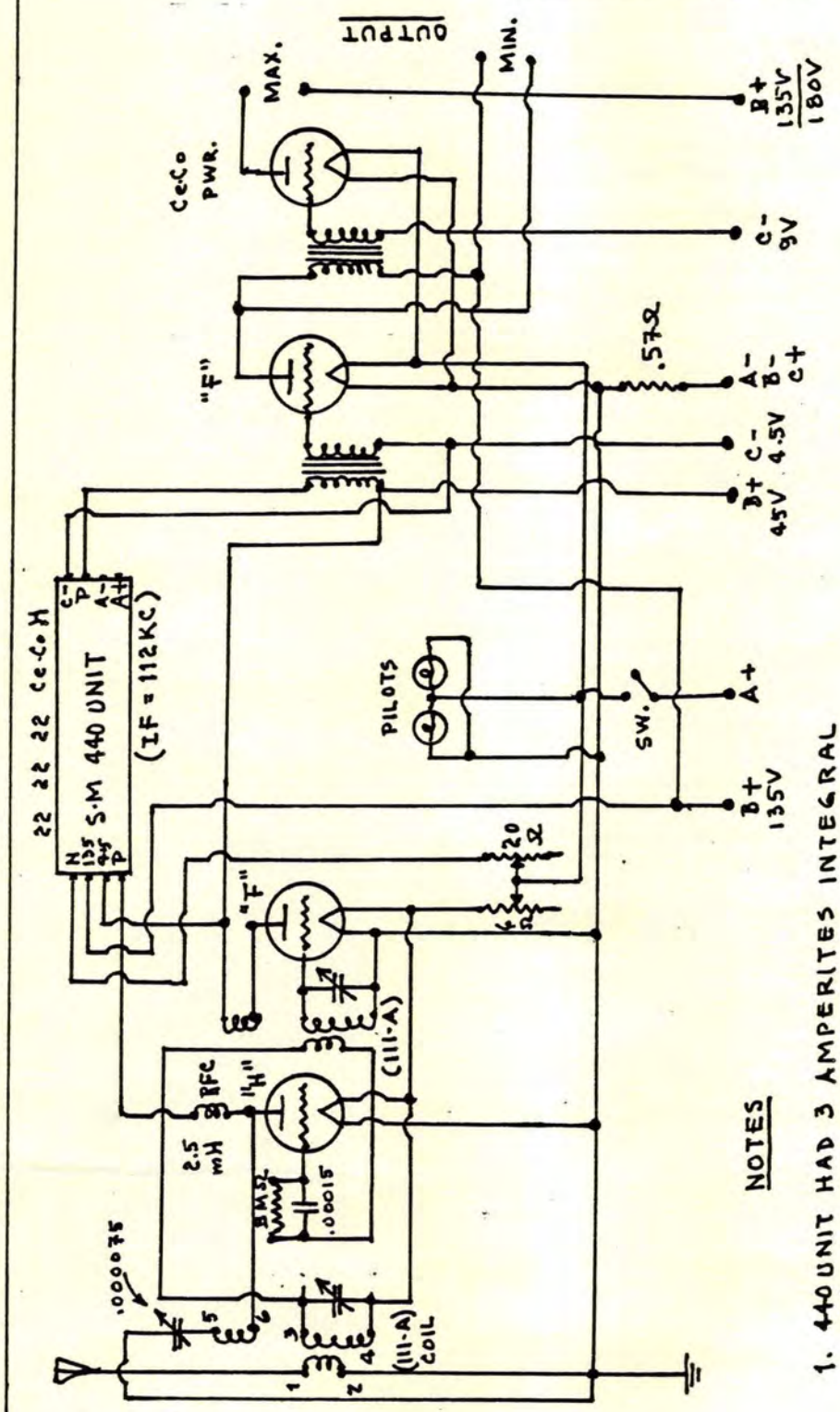

NOTES

1. 440 UNIT HAD 3 AMPERITES INTEGRAL W/ 22 FILAMENT(-) LEADS.
2. VARIABLES = 375 MMFD (2).
3. PANEL = 7"X24" (Metal).
4. CHASSIS = 10"X23" X 1½".
5. 9 BINDING POSTS REQUIRED.
6. COVERAGE = 30~3000 METERS.
7. SEE SHT.2 FOR 440 LAYOUT.
8. Ce-Co TUBES THROUGH-OUT.

NOTES ON SLEEPER's "MONOTROL"

The following notes apply, in general, to most any Sleeper set, as all were based on the Inverse Duplex circuitry of Grimes.

SET-UP PROCEDURES:

1. Fit loop into bracket and connect the numbered cords to their corresponding posts inside set.
2. Connect batteries; seperate battery for DET.
3. Place DET tube in socket furthest right.
4. Turn AMP and DET knobs fully CCW.
5. Set loop switch, or VOL control, mid-point.
6. Plug in phones or speaker; LH jack for 3-tube operation; RH jack for all tubes.
7. Pull our button switch at bottom of panel.
8. Turn AMP knob CW until tubes light.
9. Turn DET knob until rushing noise is heard.
10. Retard DET knob until noise ceases. The DET tube is now at its most sensitive point.

    NOTE:

    The DET tube will burn brighter than the amplifier tubes.
11. Rotate the large dial until a signal is heard.
12. If no signal is heard, change loop switch setting; then rotate loop for best reception.

TROUBLE-SHOOTING THE "MONOTROL":

SET IS DEAD:
1. Set connected improperly.
2. Something is disconnected.
3. An inoperative tube.

SET HOWLS:
1. Loop switch too far to the right.
2. DET tube defective.
3. B-batteries run down.
4. A seperate battery for the DET tube was not used.

WEAK SIGNALS:
1. Run down batteries.
2. Loop terminals reversed.
3. Poor tubes or tube contacts.
4. Reversed speaker terminals.

CRACKLING NOISES:
1. Defective tubes.
2. Loose connexions.
3. Run down batteries.
4. External electrical disturbances - e.g., car ignition, power lines, etc.

(RCA) POCKET PORTABLE, 1940

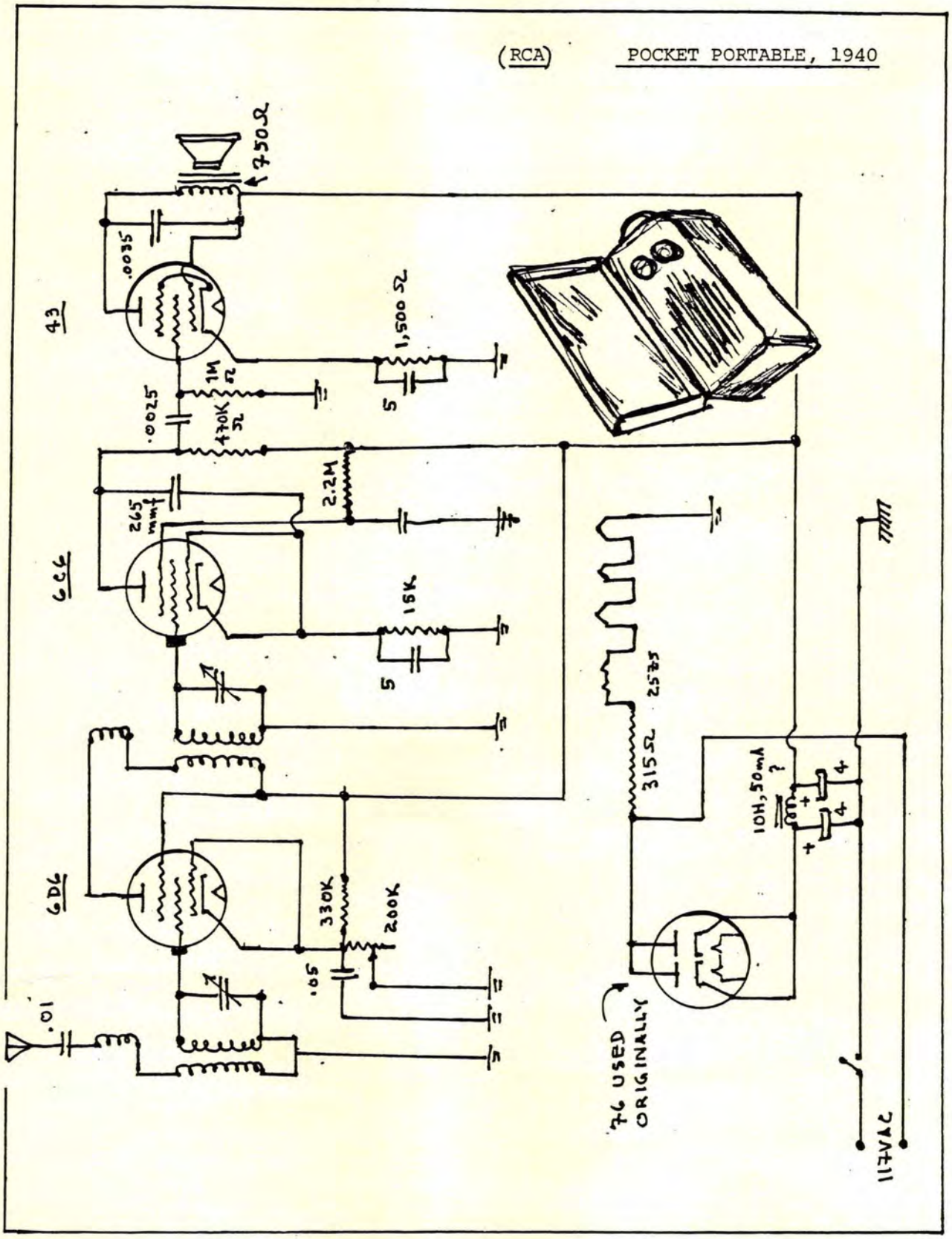

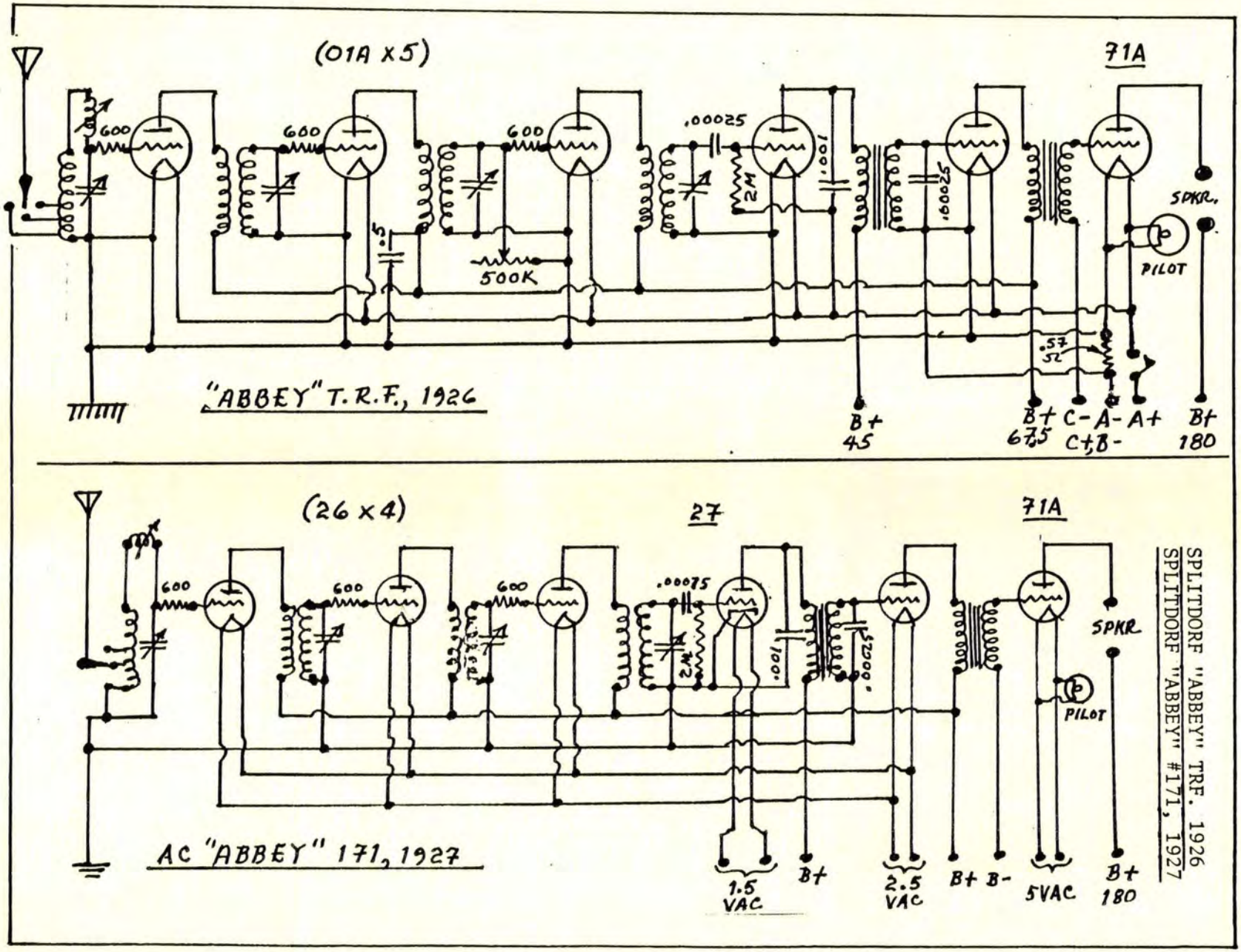

SPLITDORF "ABBEY" TRF. 1926
SPLITDORF "ABBEY" #171, 1927

"STANDARDYNE" REFLEXED VERSION MULTIVALVE, 1926

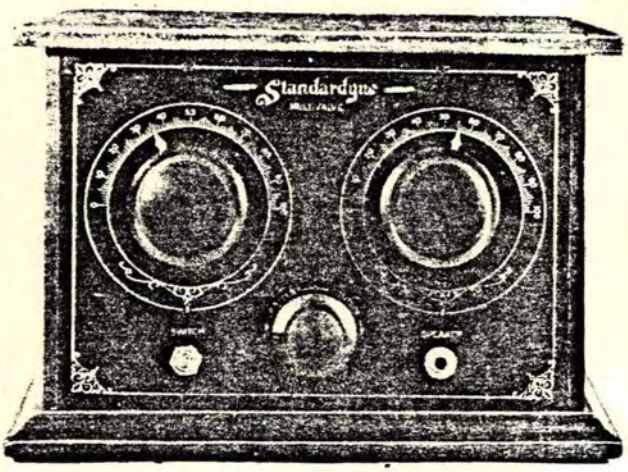

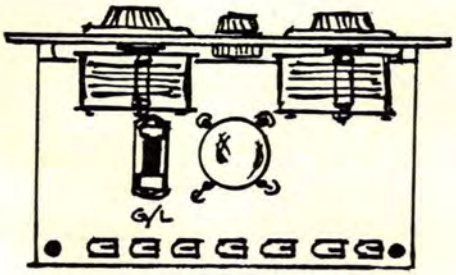

TOP VIEW

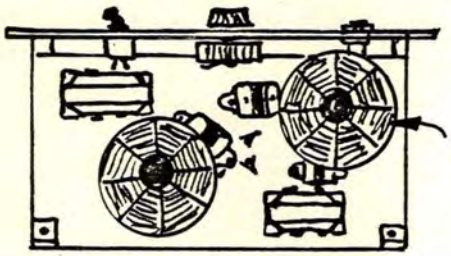

Spider-Web coils w/ Fibre Cover R

BOTTOM VIEW

(See Vol. VII for Valve connexions.)

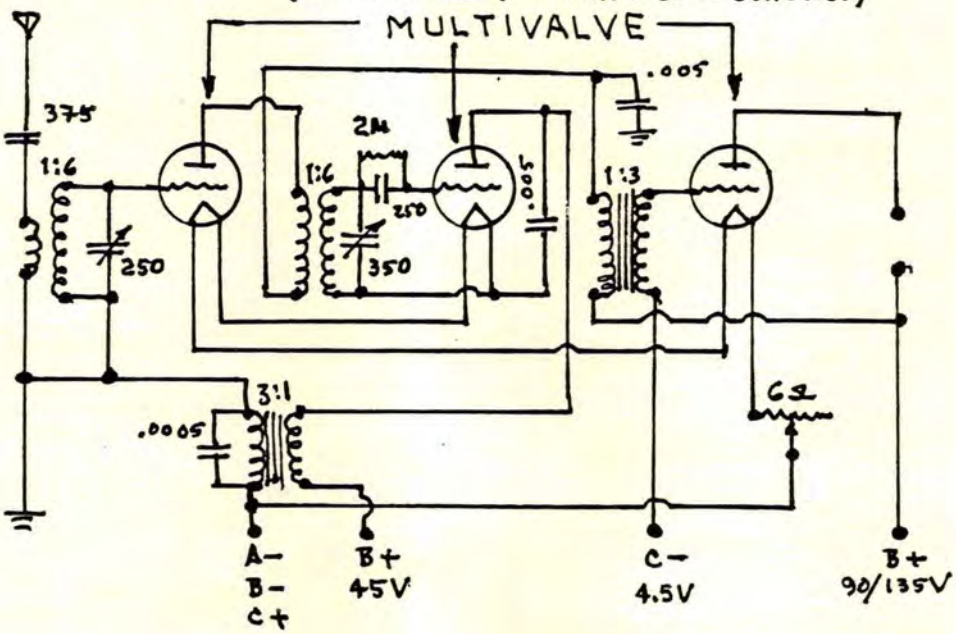

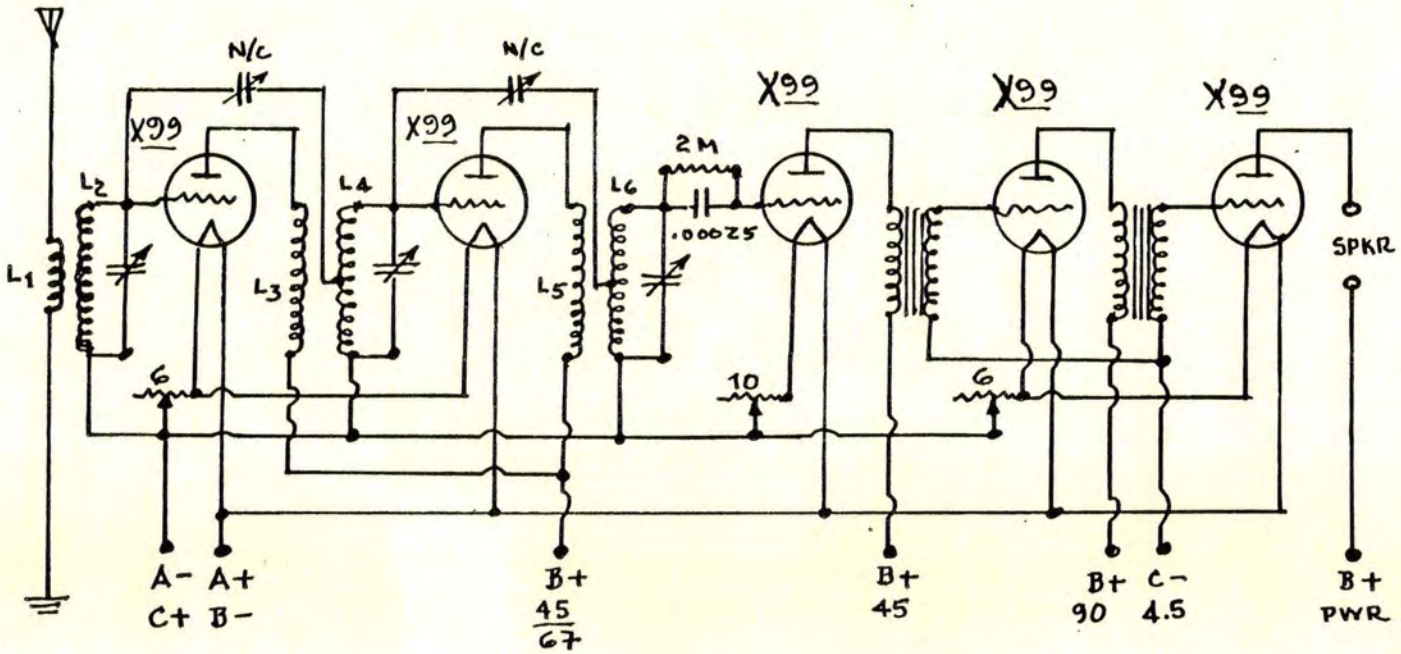

5-TUBE STANDARD NEUTRODYNE CIRCUITRY, Sht. 1

COIL DATA: L_1, L_3, L_5 = PRI 8T #22 DCC
L_2, L_4, L_6 = SEC 55T #22 DCC

PRI WOUND OPPOSITE TO SEC.

L_4 & L_6 TAPT @ 15th TURN FROM "F" END.

COIL FORMS = 2 7/8" ø x 4".

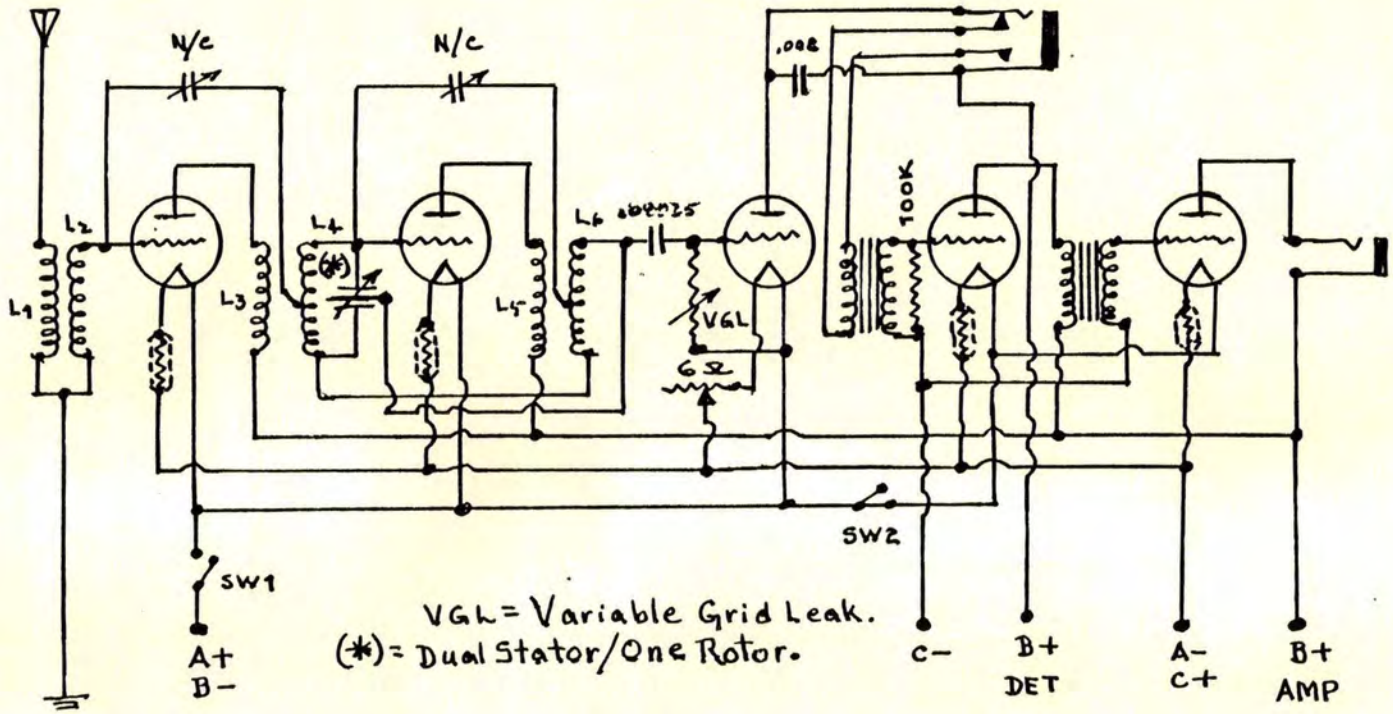

VGL = Variable Grid Leak.
(*) = Dual Stator/One Rotor.

COIL DATA: L_3, L_5 = PRI 12T # 22 DCC.
L_4, L_6 = SEC 45T # 22 DCC.

SPACING = 1/8" BETWEEN WINDINGS.

SEC IS TAPT @ 12T, THEN 33T MORE.

COIL FORM = 3"Ø x 4".

5-TUBE STANDARD NEUTRODYNE CIRCUITRY, Sht. 2

5-TUBE STANDARD NEUTRODYNE CIRCUITRY, Sht. 3

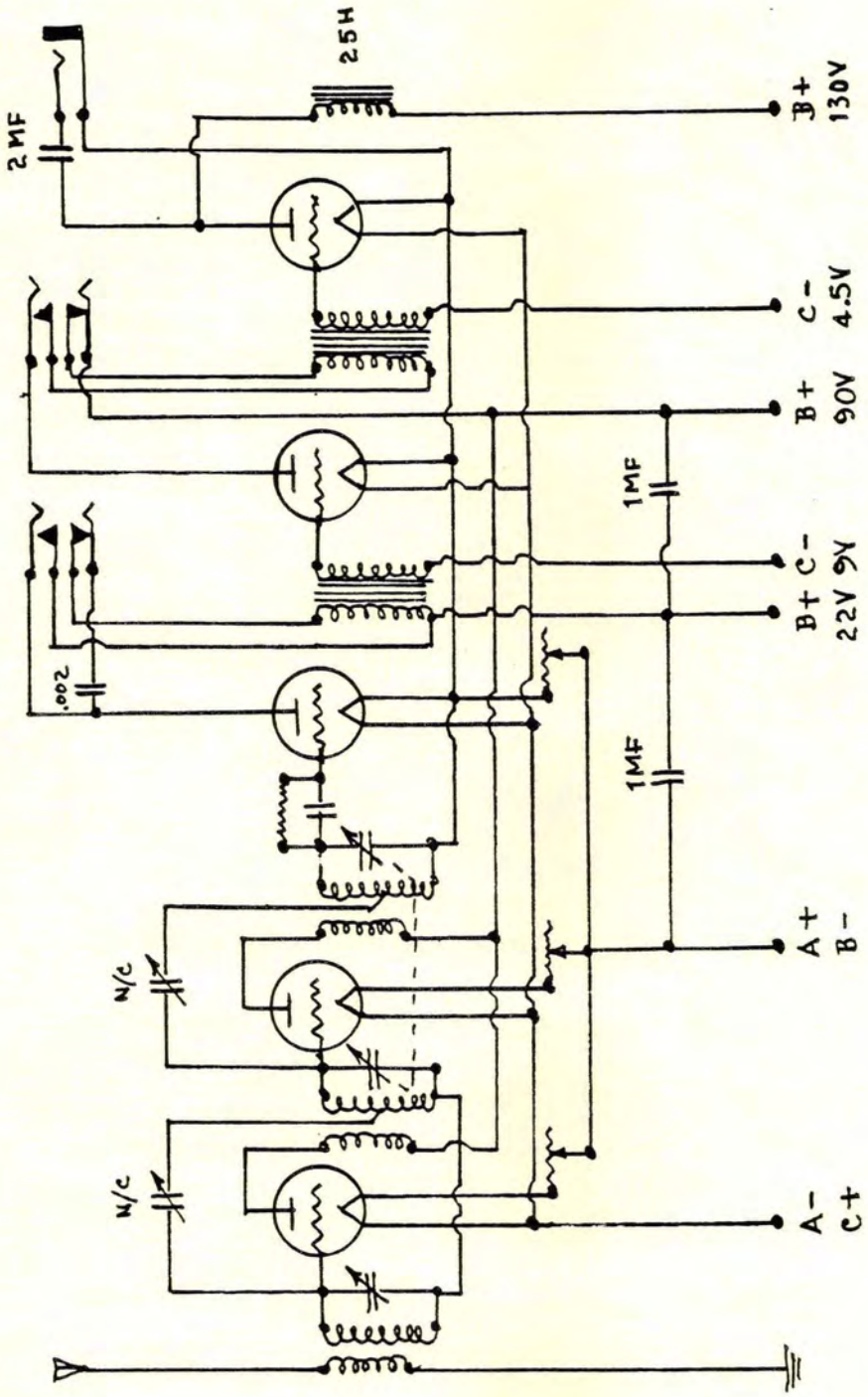

STERLING MINIATURE RECEIVER; 1928:Sht.1
SCREEN-GRID TUBES

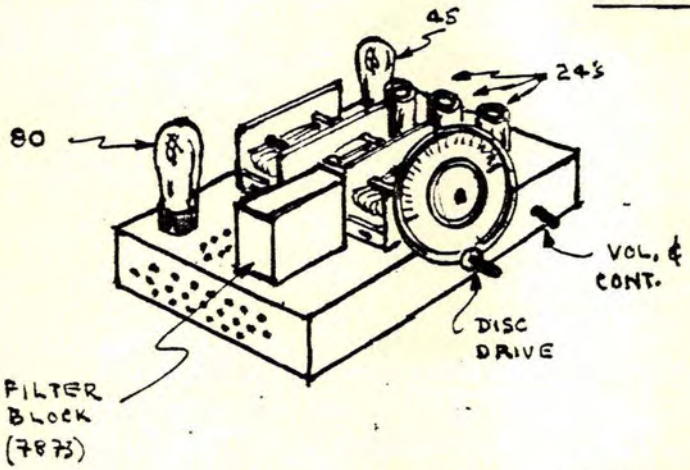

1. This set was prone to hum. Check the DFT circuit; switch 24 tube.
2. For excessive regeneration, check position of grid wires - may be too close together.
3. Check .015 condenser on centre of Fuse panel and/ or for an open .25 MFD.
4. Dial and disc—drive were Precise #7866 or General Instrument #7867, if Sterling #7811 is not used

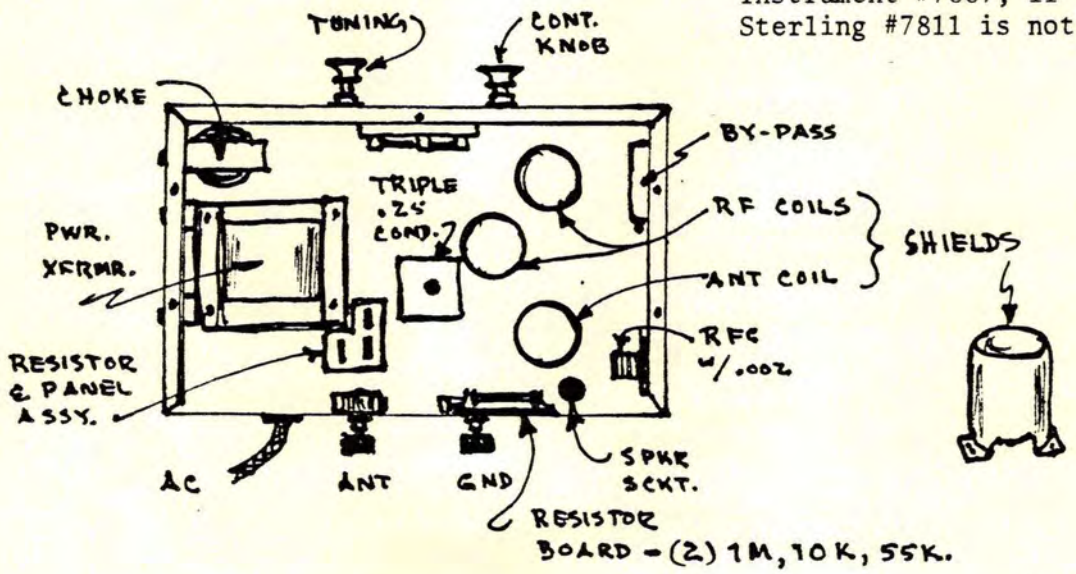

5. VOL control and AC switch were one unit.
6. Coil data: ANT coil was Precise #7829/G.I.#8010.
   RF coils were Precise #7830 (2).
7. Variables were Precise #7832/G.I.# 7872.
8. Speaker cable = 20.5" minimum from set.
9. All condensers were in 2 wax-sealed blocks.

NOTE: This was not too keen a receiver.

STERLING MINIATURE RECEIVER; 1928; Sht.2

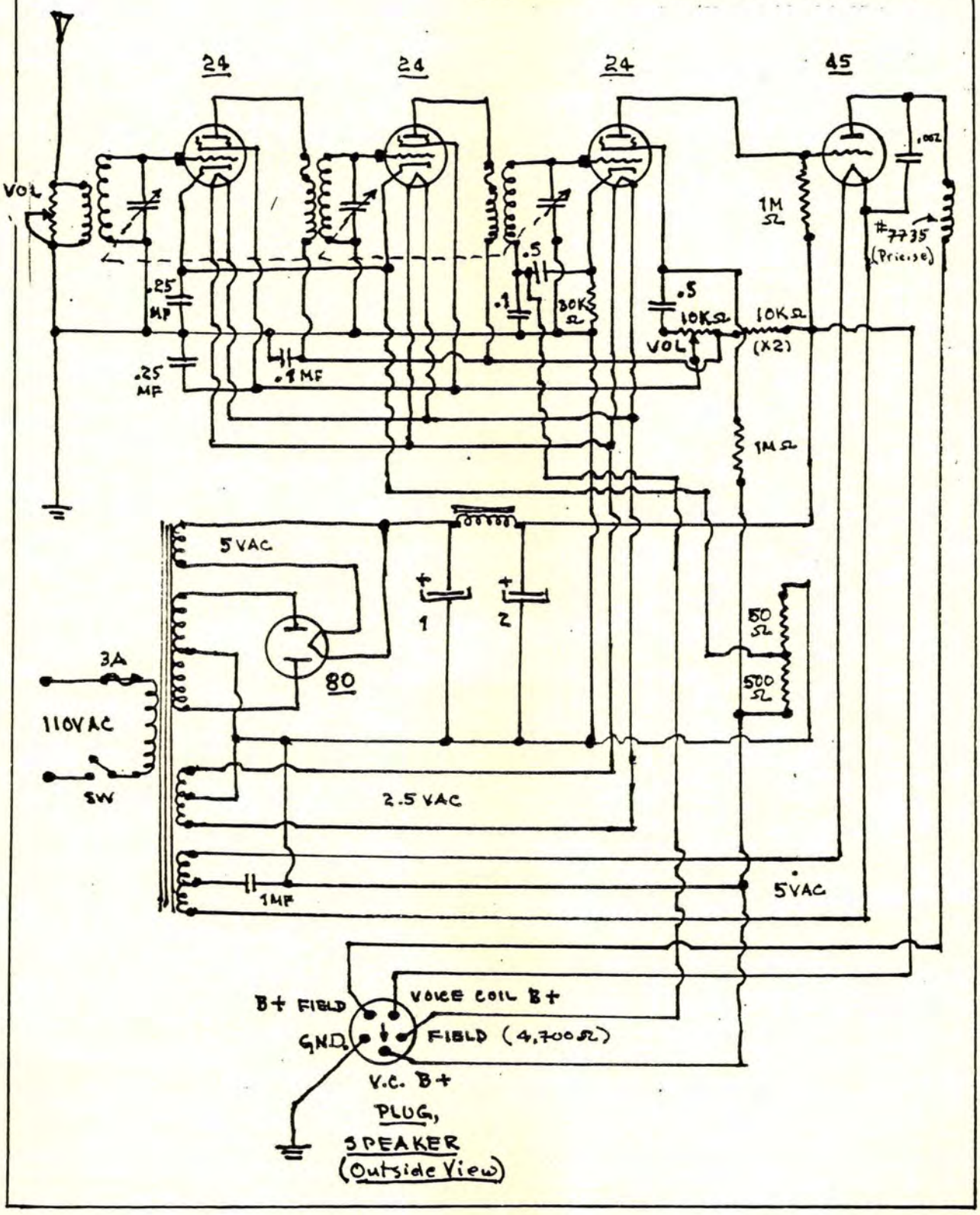

STEWART-WARNER Models R-100-A/-B/-C;Sht.1

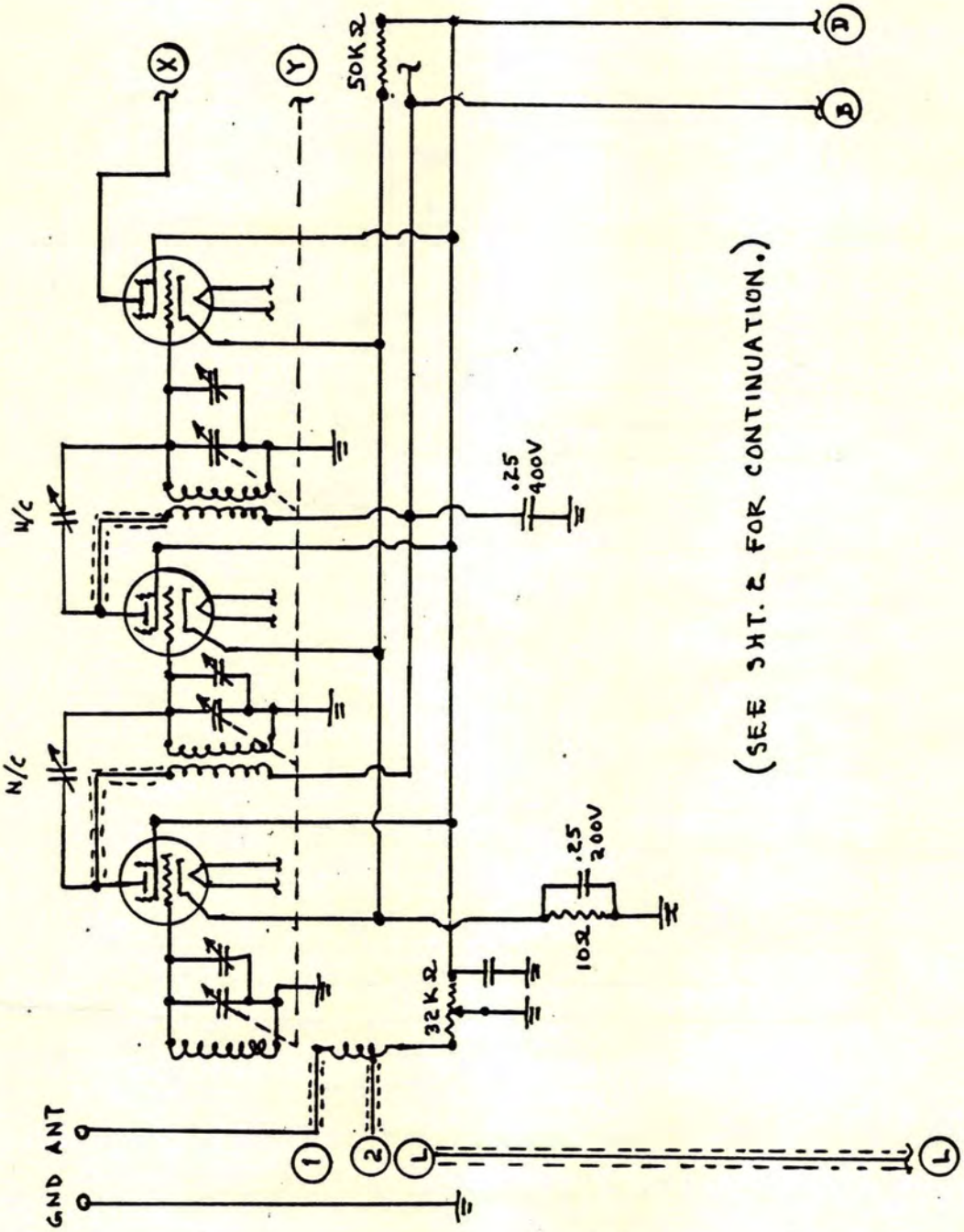

(SEE SHT. 2 FOR CONTINUATION.)

STEWART-WARNER Models R-100-A/-B/-C;Sht.2

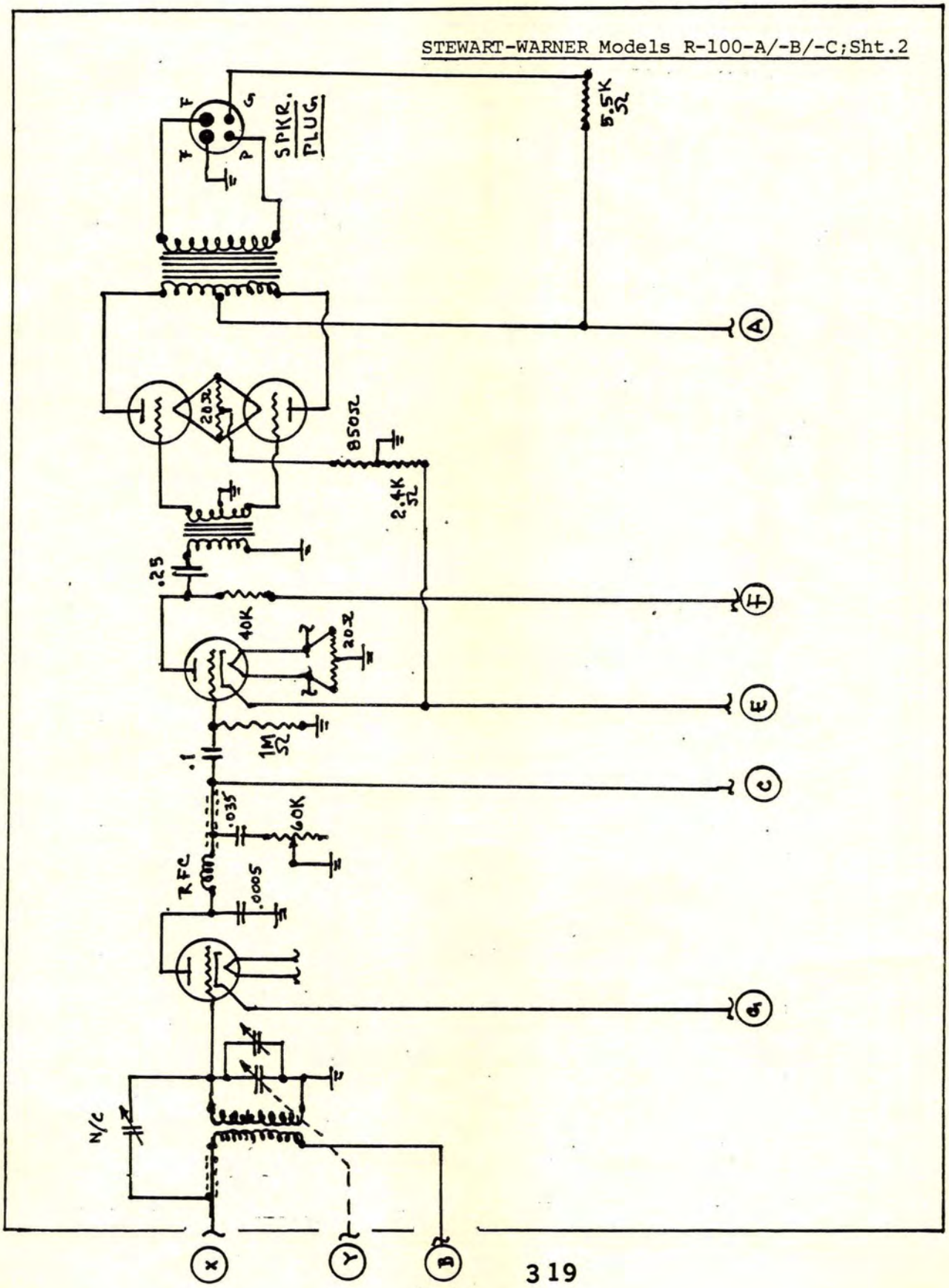

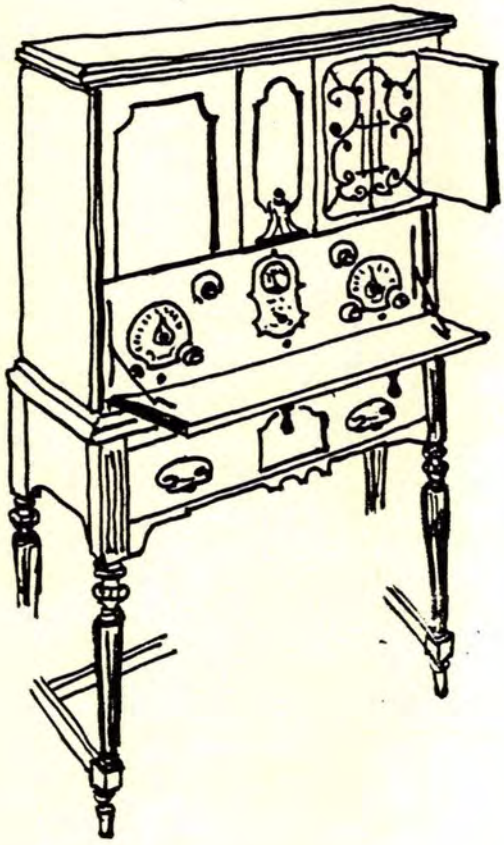

STROMBERG-CARLSON MODELS 601-A & -B
(1927) (Sht. 1)

NOTES:

1. 6-Tube Neutrodyne.
2. 3 Stages RF; 2 stages AF.
3. Detector.
4. 3-Gang Variable; single variable
5. Inletted veneer panels; motif carried onto shelf-door.
6. Veneer pattern also in centre of bottom drawer.
7. Brass hardware.
8. Coils and variables shielded with Al. Al. shield cans.
9. All wiring cabled with grounding shielding.

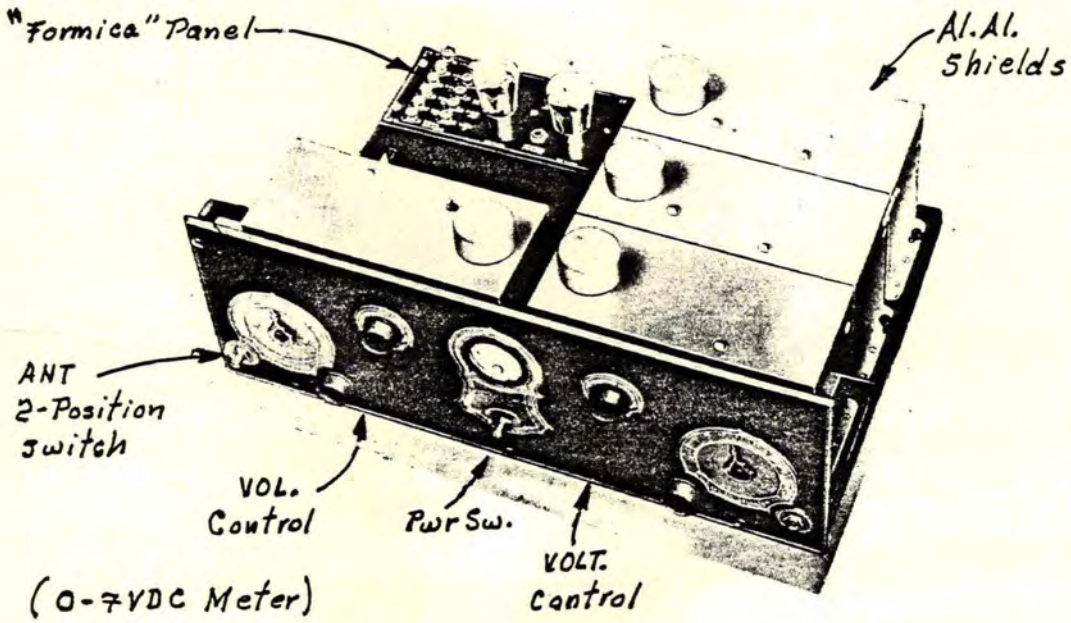

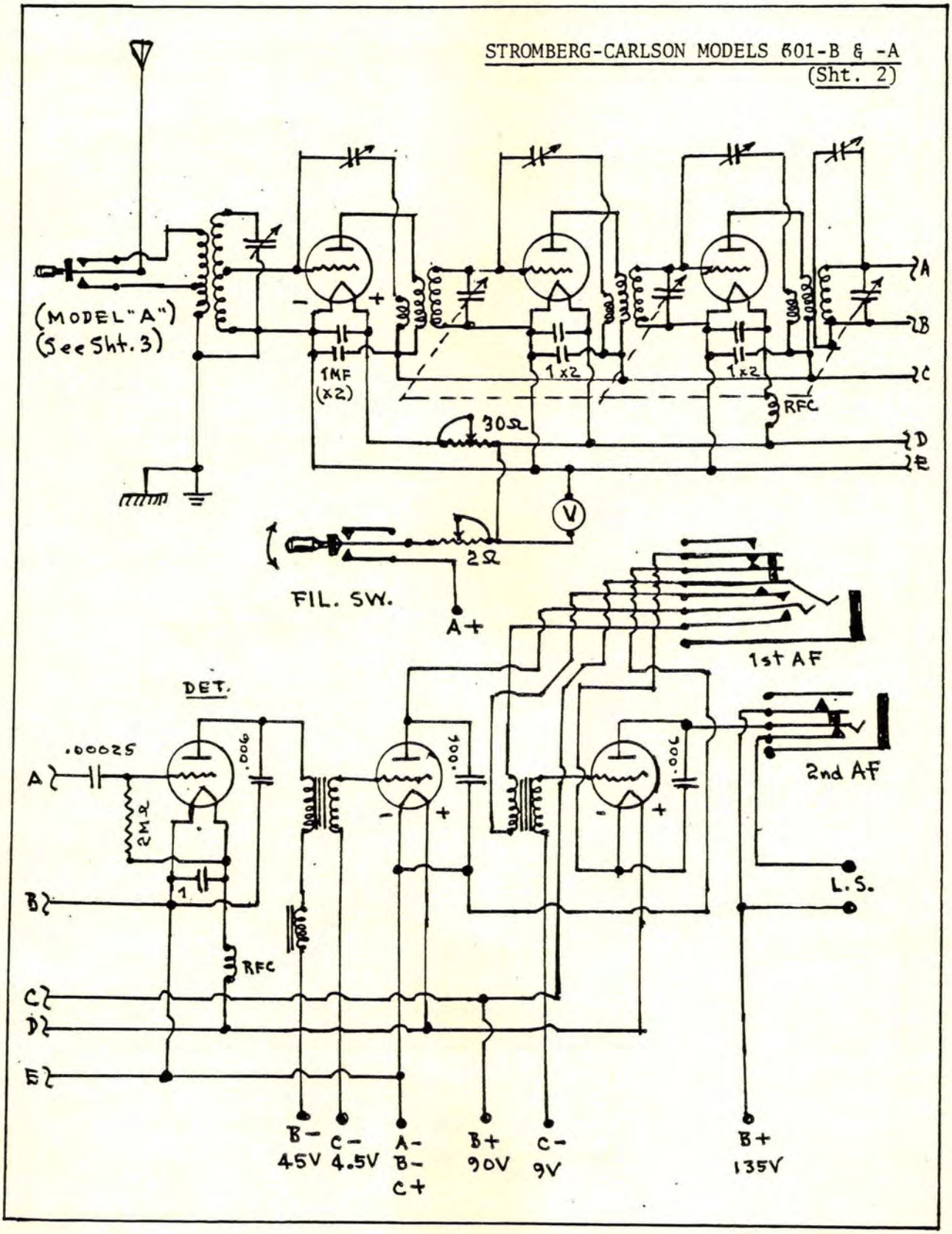
STROMBERG-CARLSON MODELS 601-B & -A
(Sht. 2)
(MODEL "A")
(See Sht. 3)
1MF
(x2)
1x2
1x2
RFC
30Ω
2Ω
FIL. SW.
A+
1st AF
2nd AF
DET.
.00025
2MΩ
.006
.006
.006
RFC
L.S.
A
B
C
D
E
B-
45V
C-
4.5V
A-
B-
C+
B+
90V
C-
9V
B+
135V

STROMBERG-CARLSON MODELS 601-A & -B
(Sht. 3)

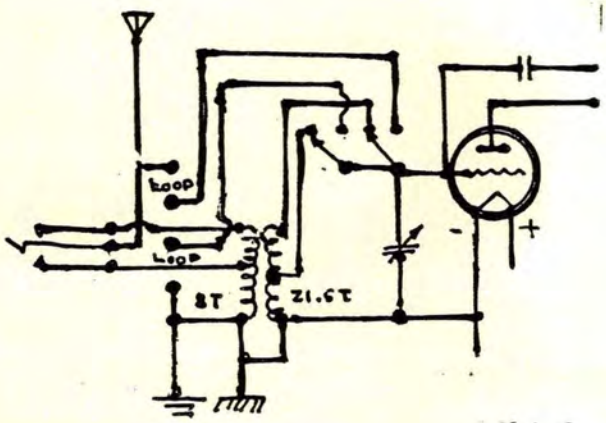

Model 601-B Configuration
(See Sht. 2 for 601-A)

ANT COIL DATA

PRI = 22 T at top;
8 T at bottom.

SEC = 21.75 T at bottom;
21.5 T at top.

ALL RF COILS AS BELOW:

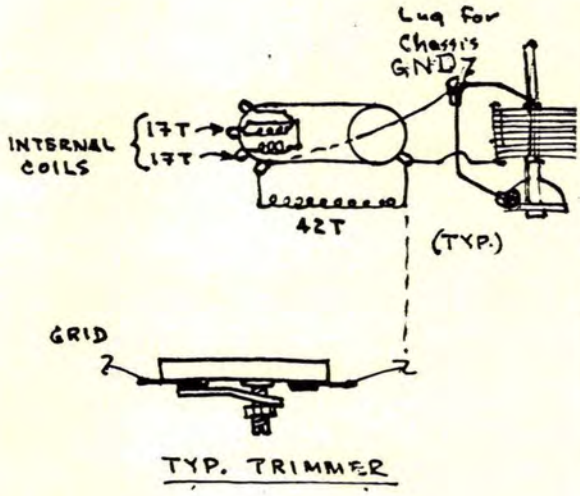

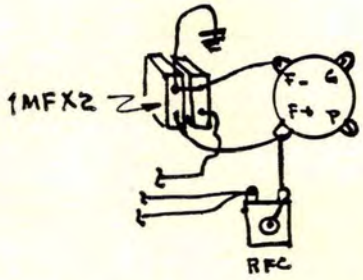

TYPICAL TUBE CONFIGURATION

NOTES:
1. All wiring cabled with grounding shielding.
2. Metal chassis is ground.
3. .006 By-pass condensers connected across the bottom of the DET and the two AF tubes only.

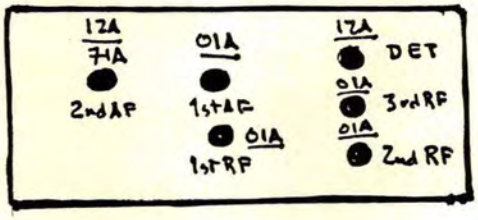

TUBE LAYOUT

TRF USING HASCOM S-C UNIT, 1926:Sht. 1

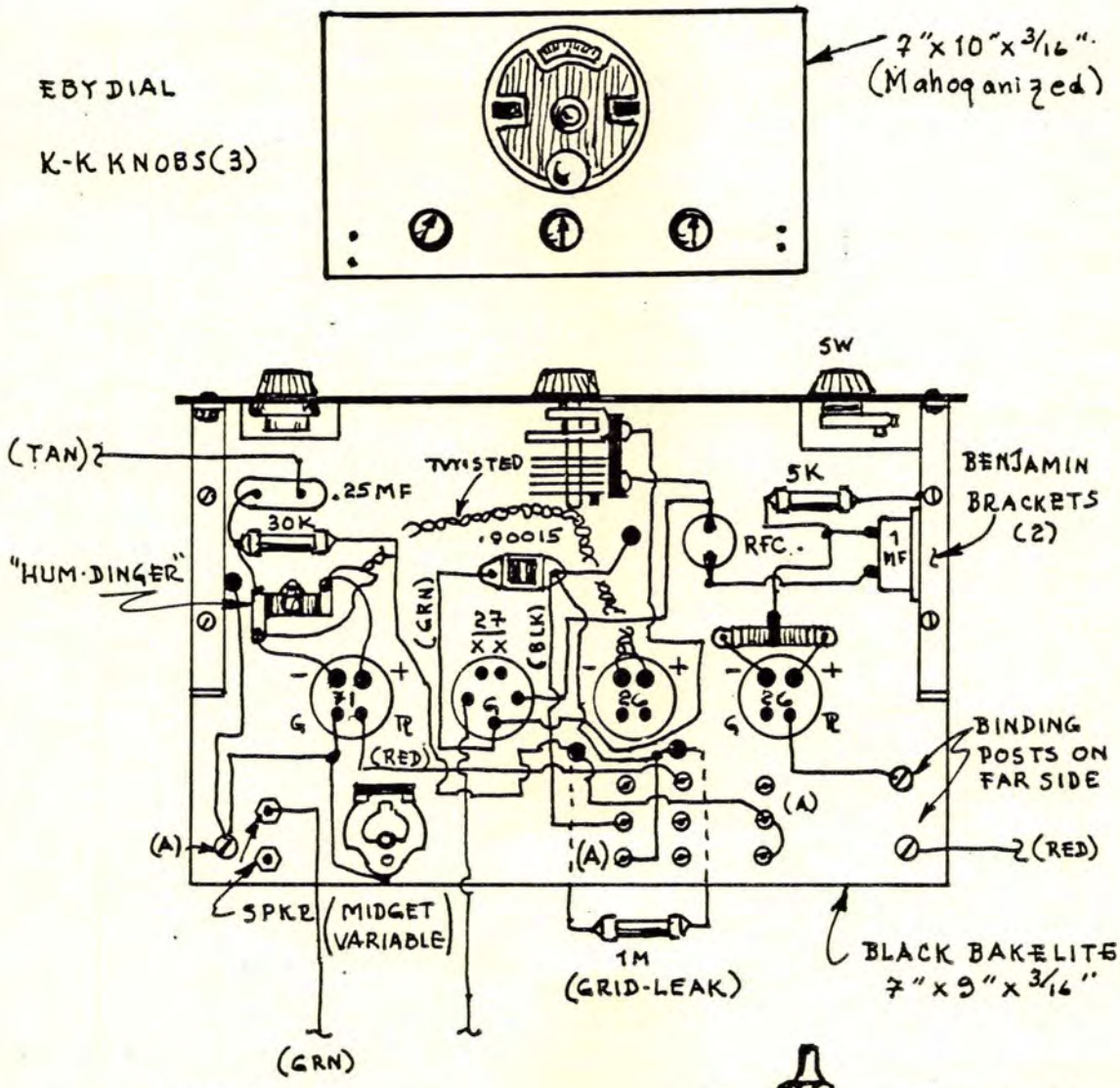

NOTES:

1. 5-M RFC.
2. (2) 3"ø SOLENOID COILS; 1 LEAD EACH END of WINDINGS.
3. AF Xfrmrs. attached under sub-panel @ connectors (A) assumed; impedance-coupling may have been used for 2nd stage.

TRF USING HASCOM S-C UNIT, 1926;Sht.2

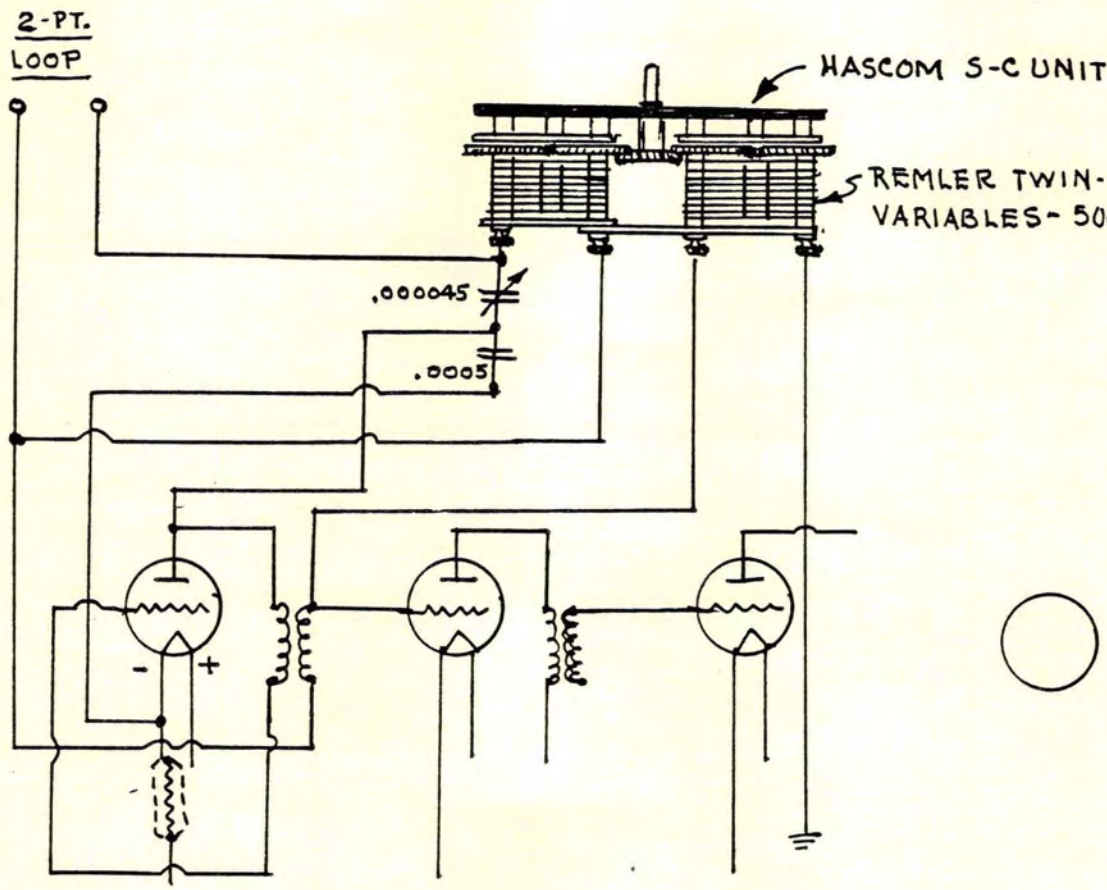

"THERIODYNE TF-5" TRF, 1926

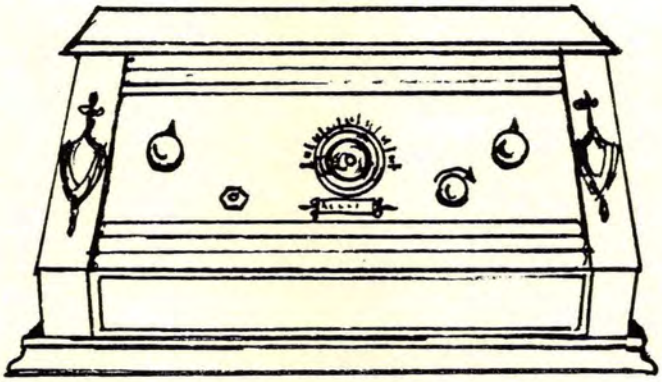

THERMIODYNE TF-5, 1926

(3) .0005 MFD Variables.

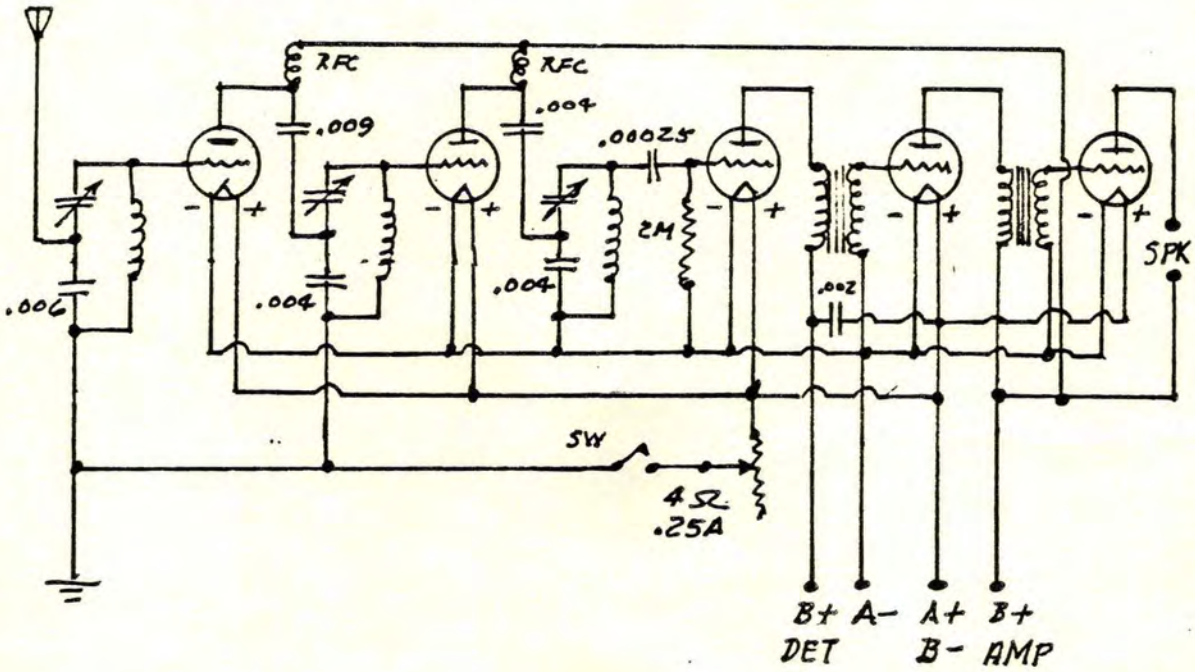

THOMPSON "MINUET" MODEL R-81; 1926
(200 to 600 Meters) (Sht. 1)

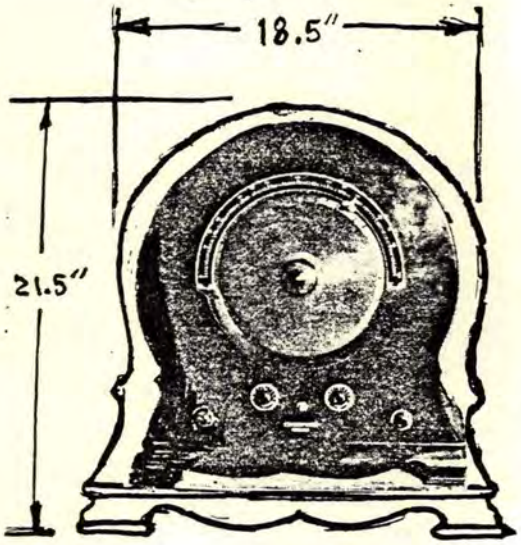

CONTROLS & CIRCUITRY
SAME FOR BOTH VERSIONS.

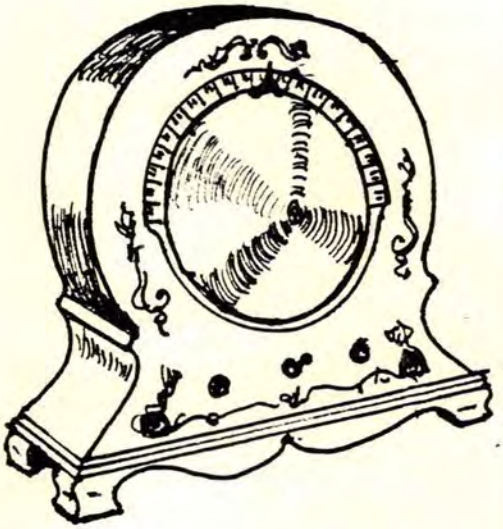

There were two cabinet versions offered by Thompson; the one above coloured in the Louis XIV style - i.e., gold and cream.

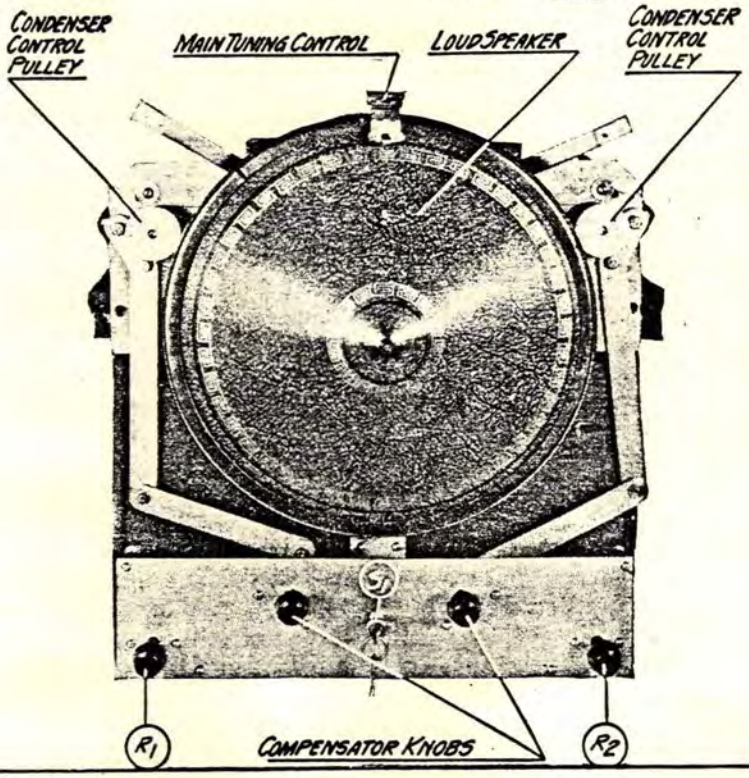

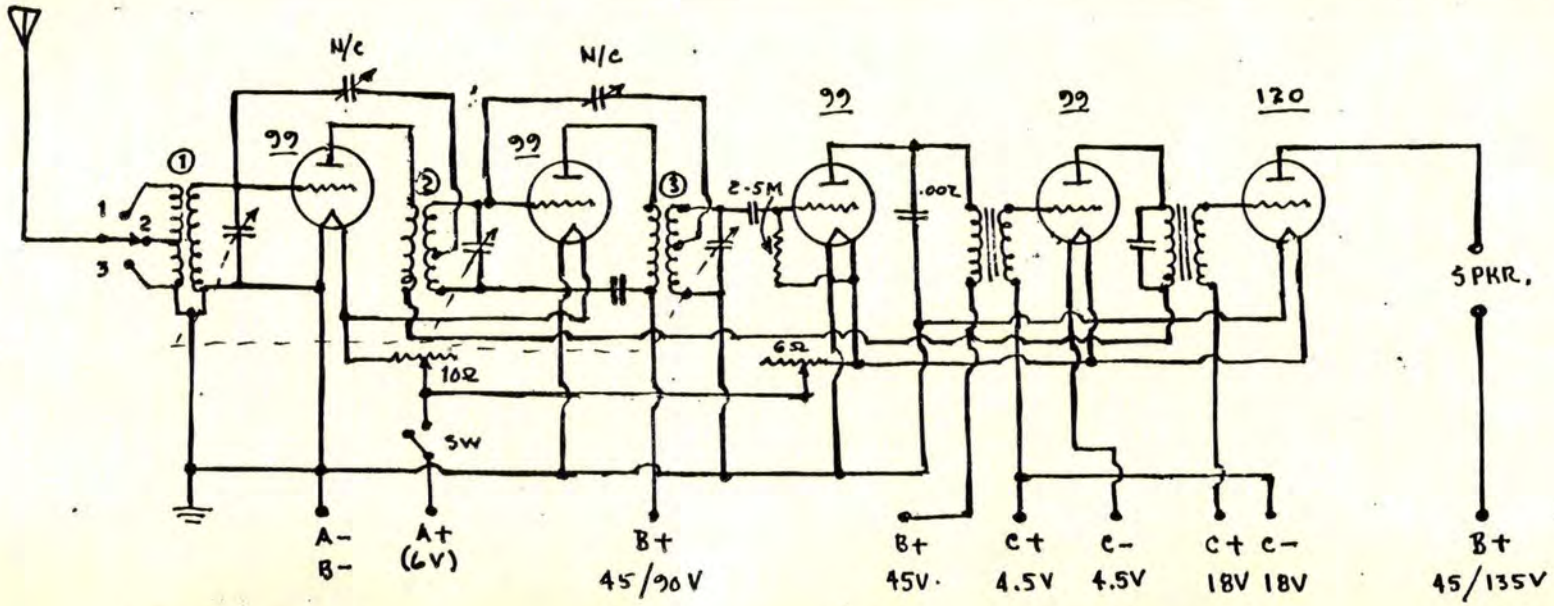

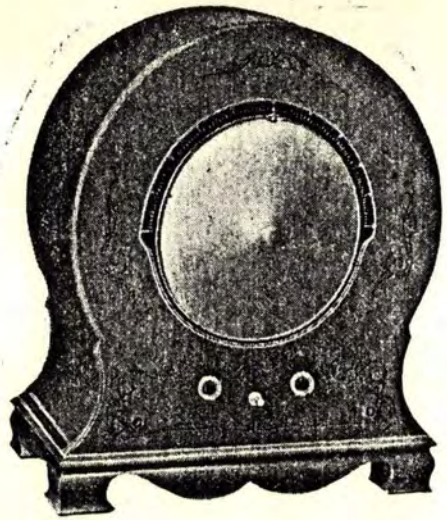

NOTES:

1. ANT taps 1,2,3 were originally binding-posts.
2. "C"-Battery connexions were peculiar.
3. RF transformer #2 had no B+.
4. 3-Gang variables in second version.
5. Main tuning was done by a ring behind the speaker cone, connected via pulleys to the variables. This concept may have influenced Lacault when he designed his "Ultradyne L-3".

THOMPSON "MINUET" MODEL "R"-81; 1926 (Sht. 2)

(PR 3-26)

THOMPSON "MINUET" Model R-81, 1926:Sht.3

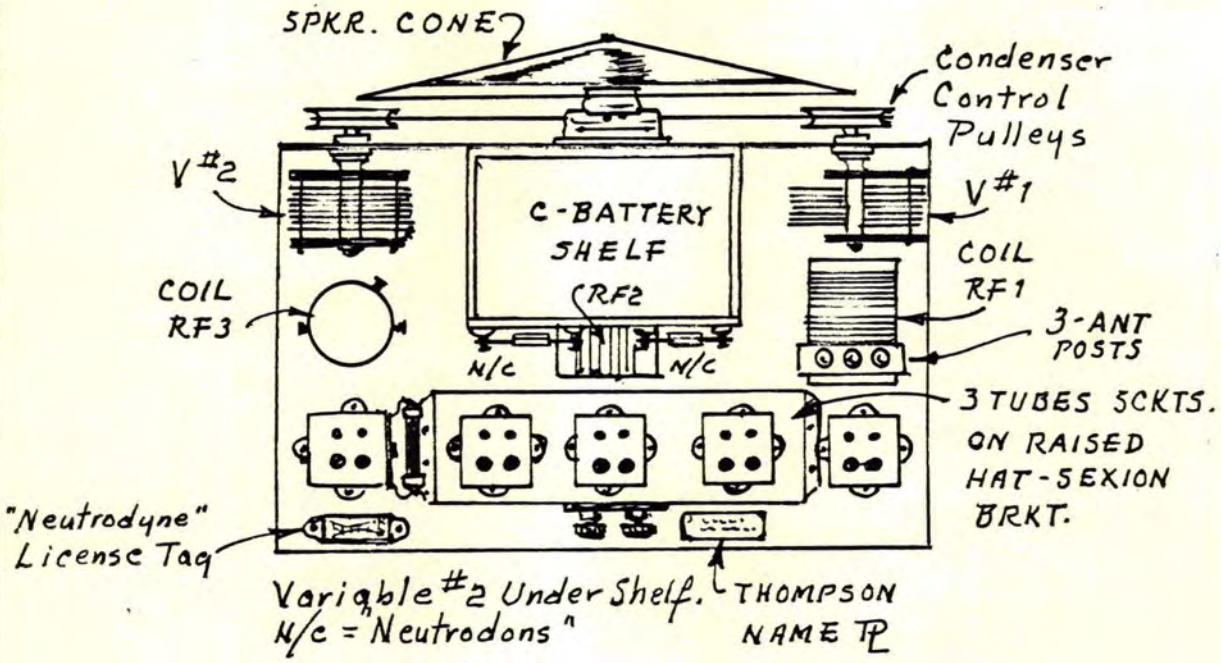

TOP VIEW

OPERATING PROCEDURES:

1. Secure all tubes.
2. Turn both rheostats (R1,R2) to half-way position.
3. Place both Compensating knobs at Zero.
4. Turn on battery switch.
5. Move (rotate) main tuning control slowly over its scale until a signal is heard. When signal is loudest, leave main control at that setting.
6. Adjust Compensating knobs for best fidelity.
7. Trim rheostats for best volume, but do not go beyond just below that point - i.e., the lowest point which will provide maximum volume of signal.
8. Compensating knobs must be re-adjusted every time another ANT post is connected. Each post connexion will hold good for all stations so long as that post connexion is not changed.
9. Stations once heard at a particular setting will always come back in at that same setting.
10. This is, obviously, a Neutrodyne receiver.

* * *

THOMPSON "MINUET" Model R-81, 1926;Sht.4

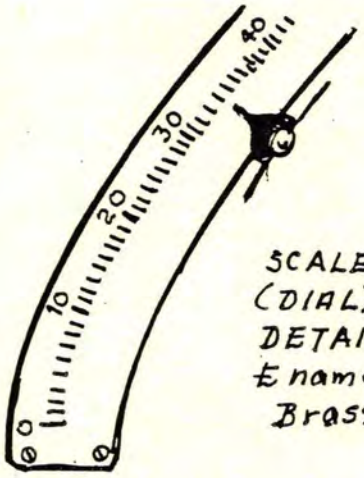

SCALE (DIAL) DETAIL ~ Enamelled Brass)

NOTES:

This uniquely styled radio was offered in 1925 at $150. The circuit was a conventional Neutrodyne circuit of the period, without innovations.

THOMPSON adverts of the time referred to the "Minuet" as:

"A Unique Apartment House Special Radio!"

(The cabinetry was, indeed, unique, which was why it caught my fancy.)

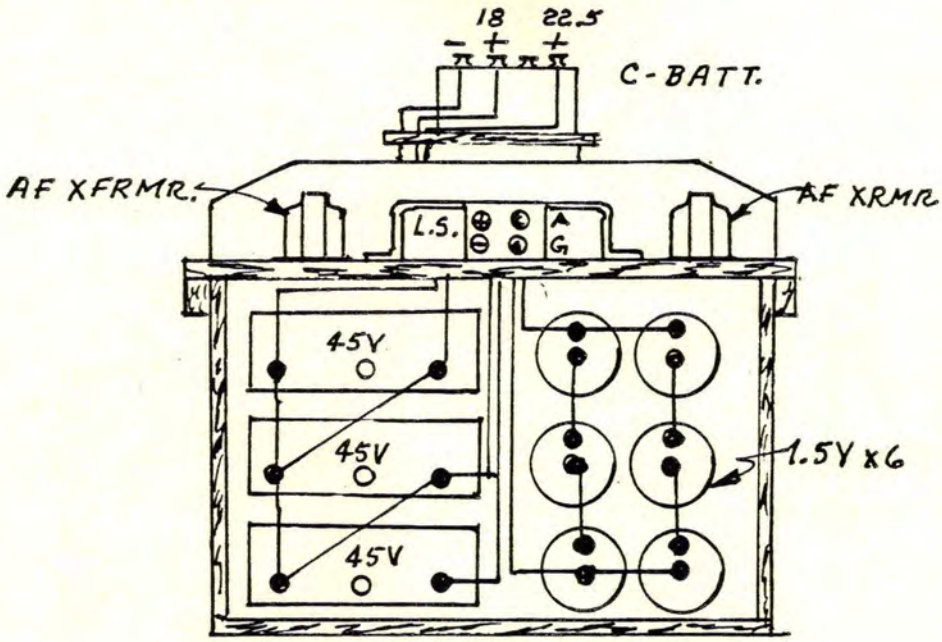

BATTERY CONNEXIONS

THORDARSON QSA-5 RECEIVER; 1928
(Sht. 1)

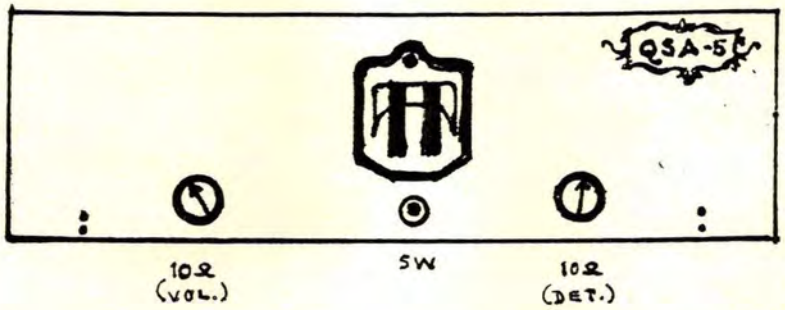

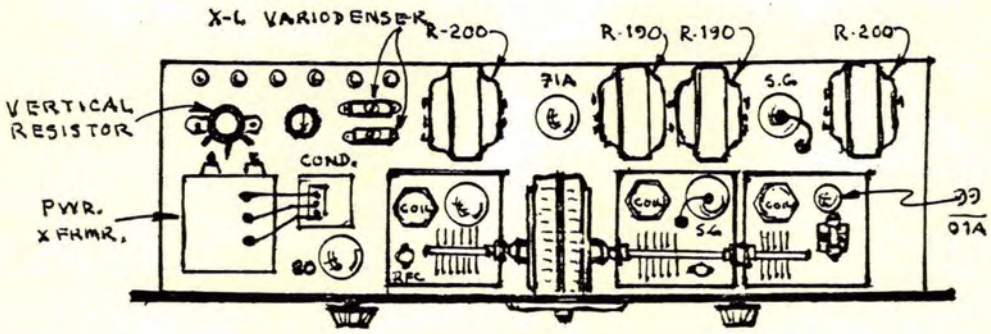

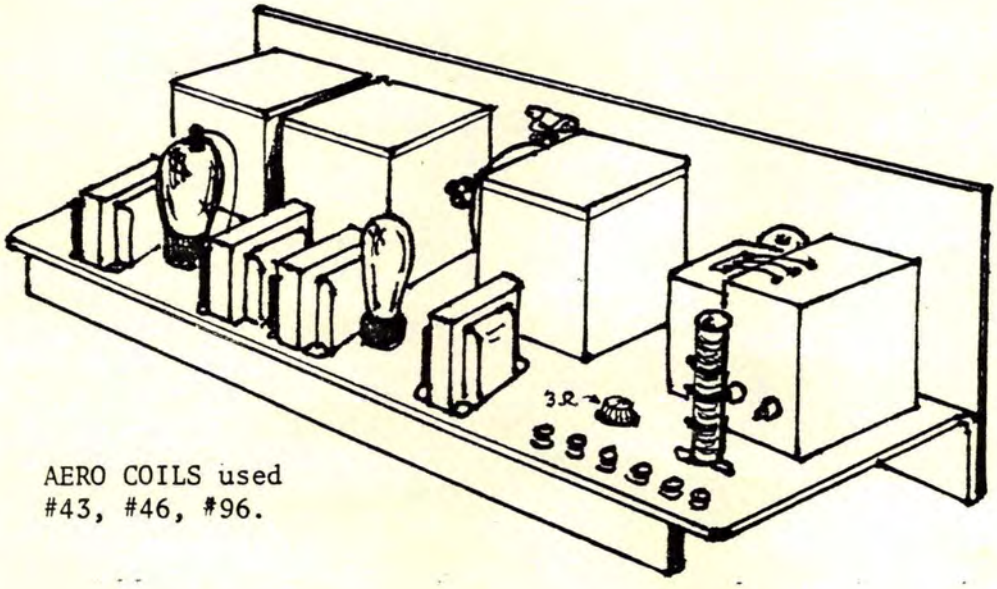

AERO COILS used
#43, #46, #96.

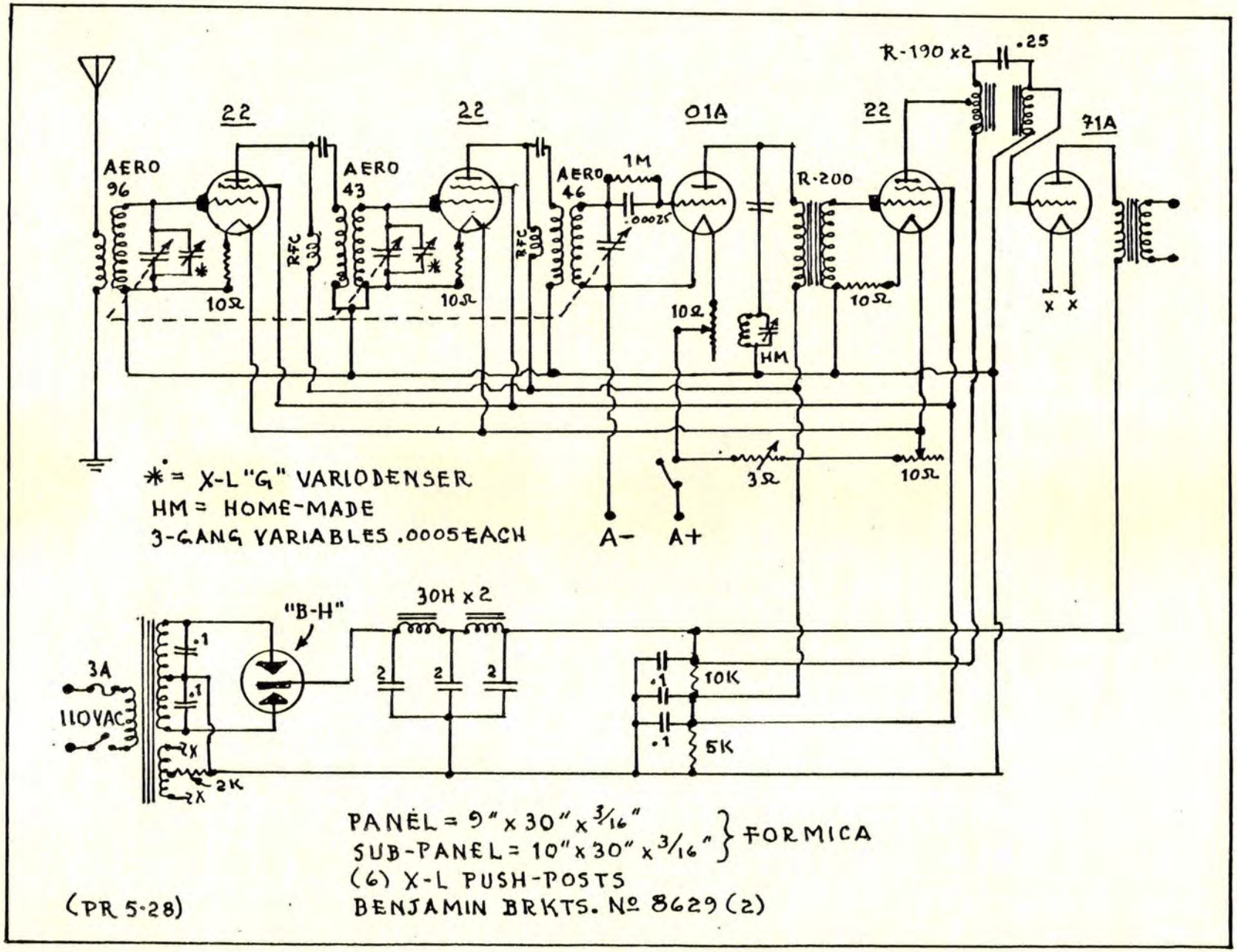

THORDARSON Q-S-A 5 RCVR., 1928

TOROIDAL COIL T.R.F. RECEIVER, 1925

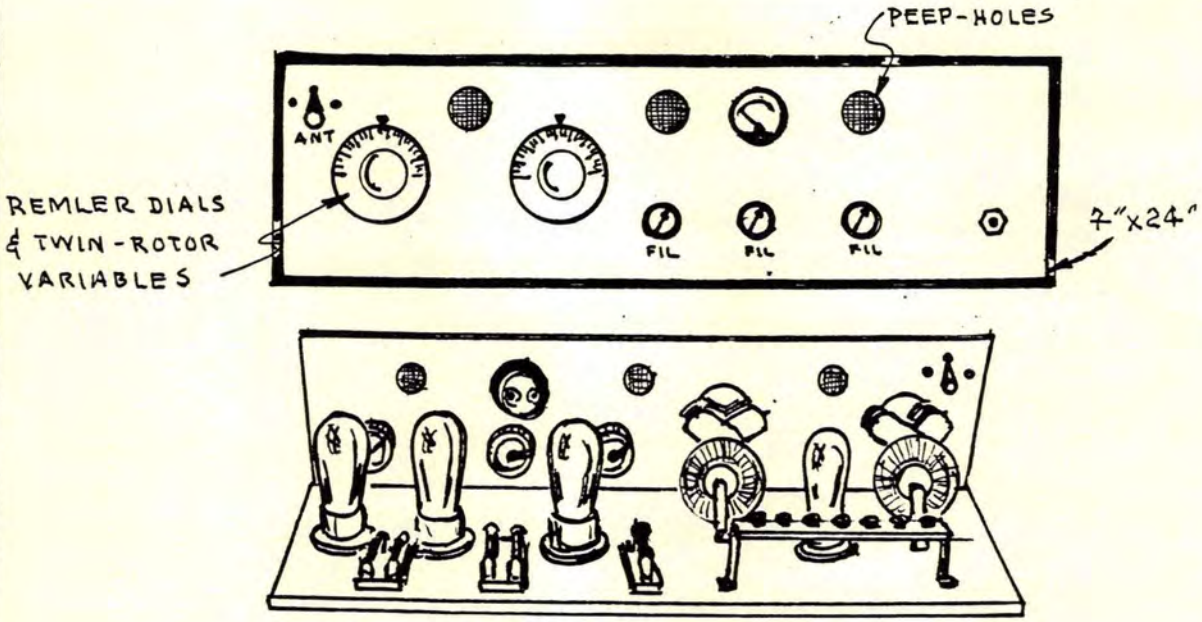

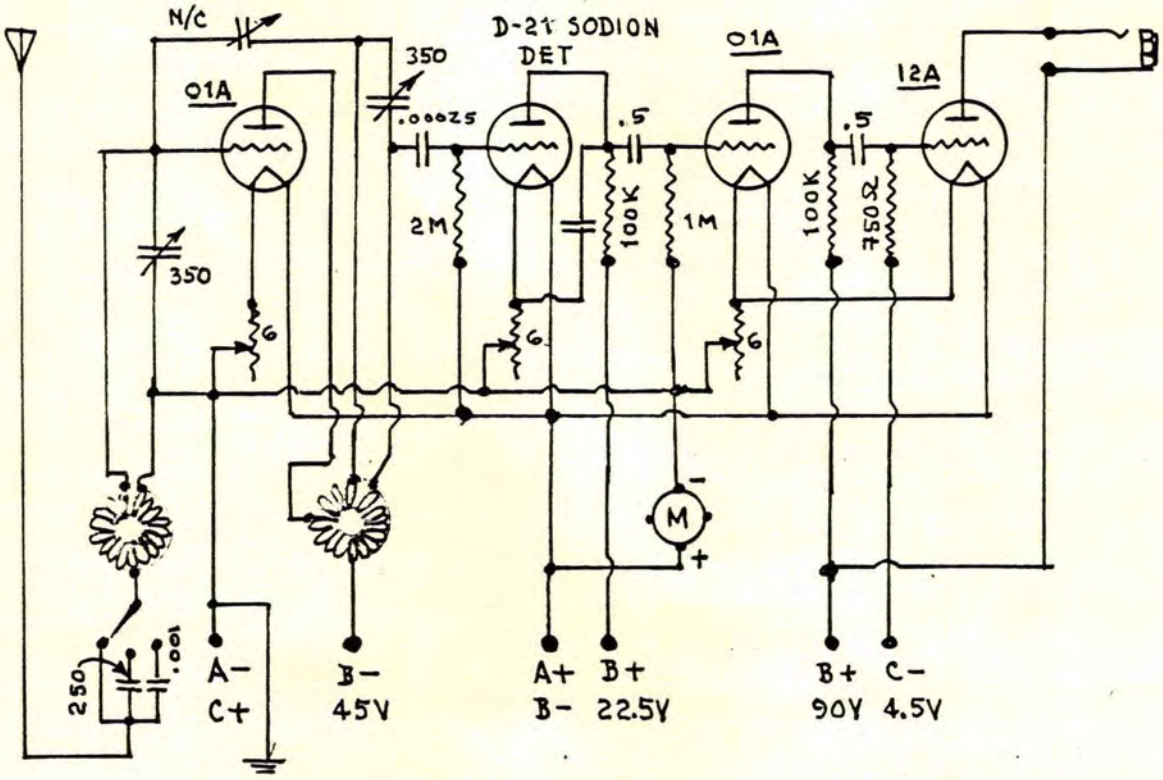

U.H.F. RECEIVER, G.B., 1937: W.W.5-7.

(Sht. 1)

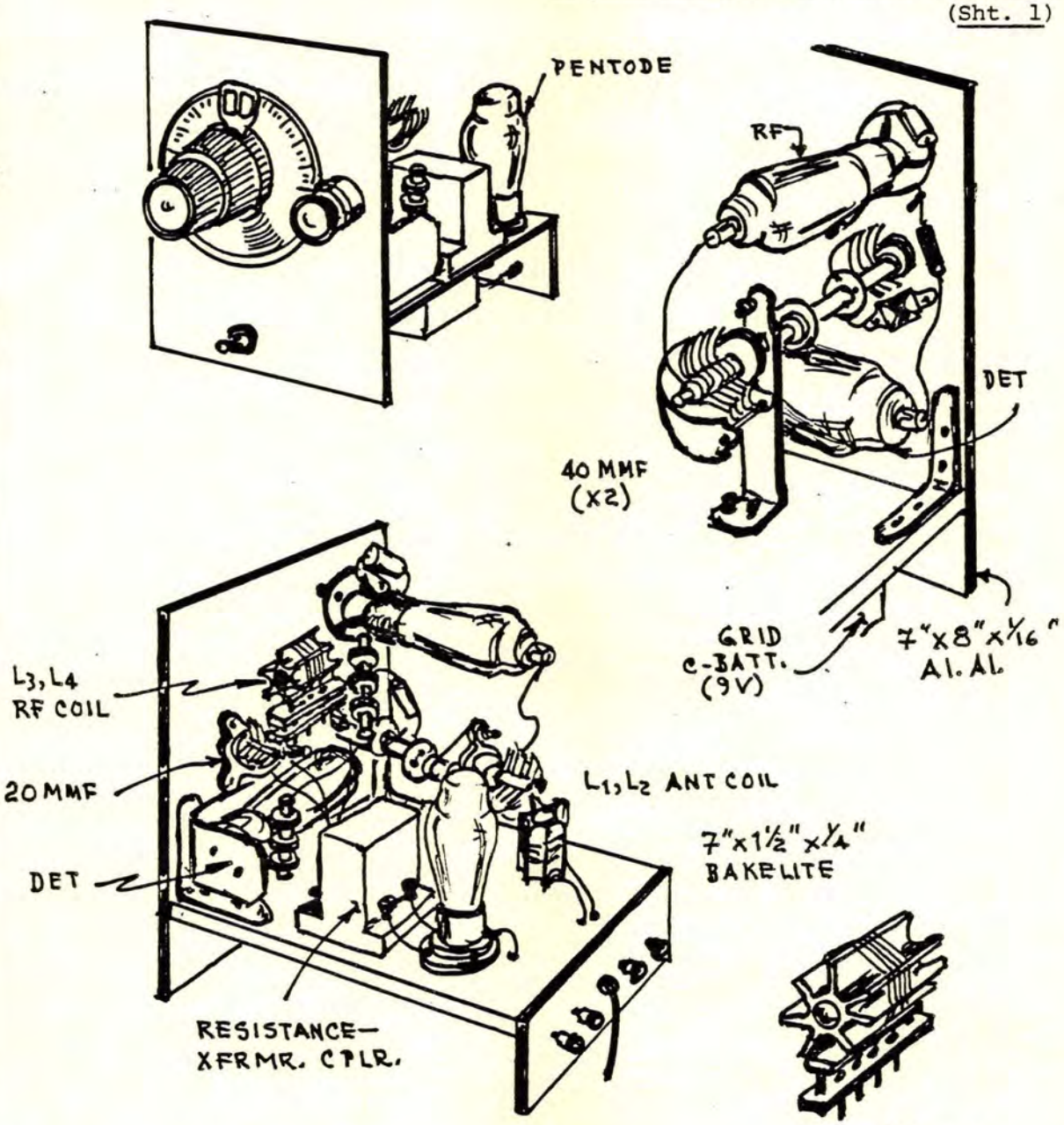

TYP. COIL
CONFIGURATION
(6 REQ.)

HIVAC SG 220 SW (1) 4-PIN
HIVAC D210 SW (1) 4-PIN
HIVAC Y220 (1) 5-PIN
PI-WOUND SW CHOKES (2)
AF OUTPUT CHOKES (RESISTORS)
UTILITY "MICRO-DIAL"

(WW 5.7.37)

U.H.F. RECEIVER, G.B.: 1937; Sht. 2

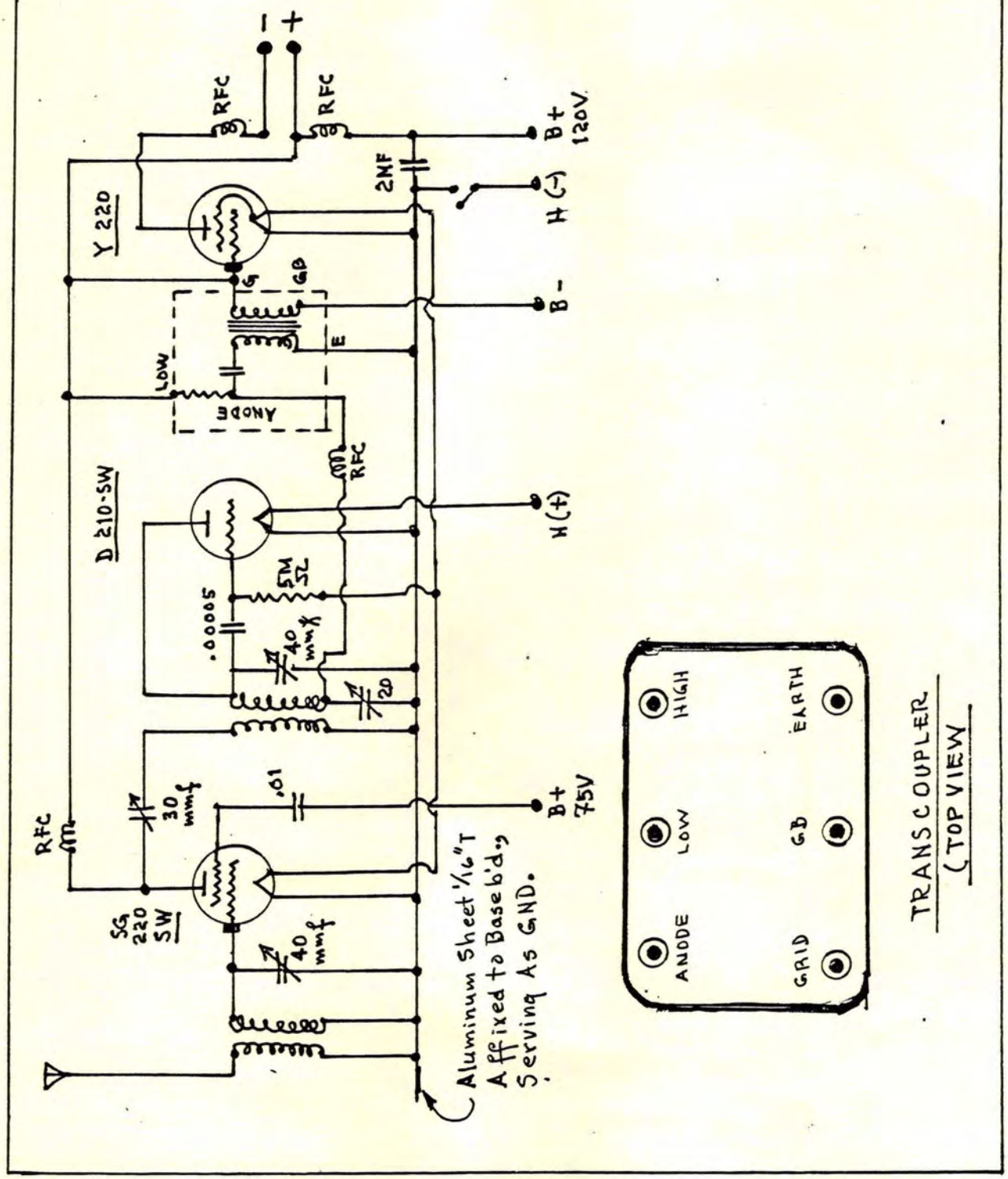

U.H.F. RECEIVER, G.B.: 1937;Sht. 3

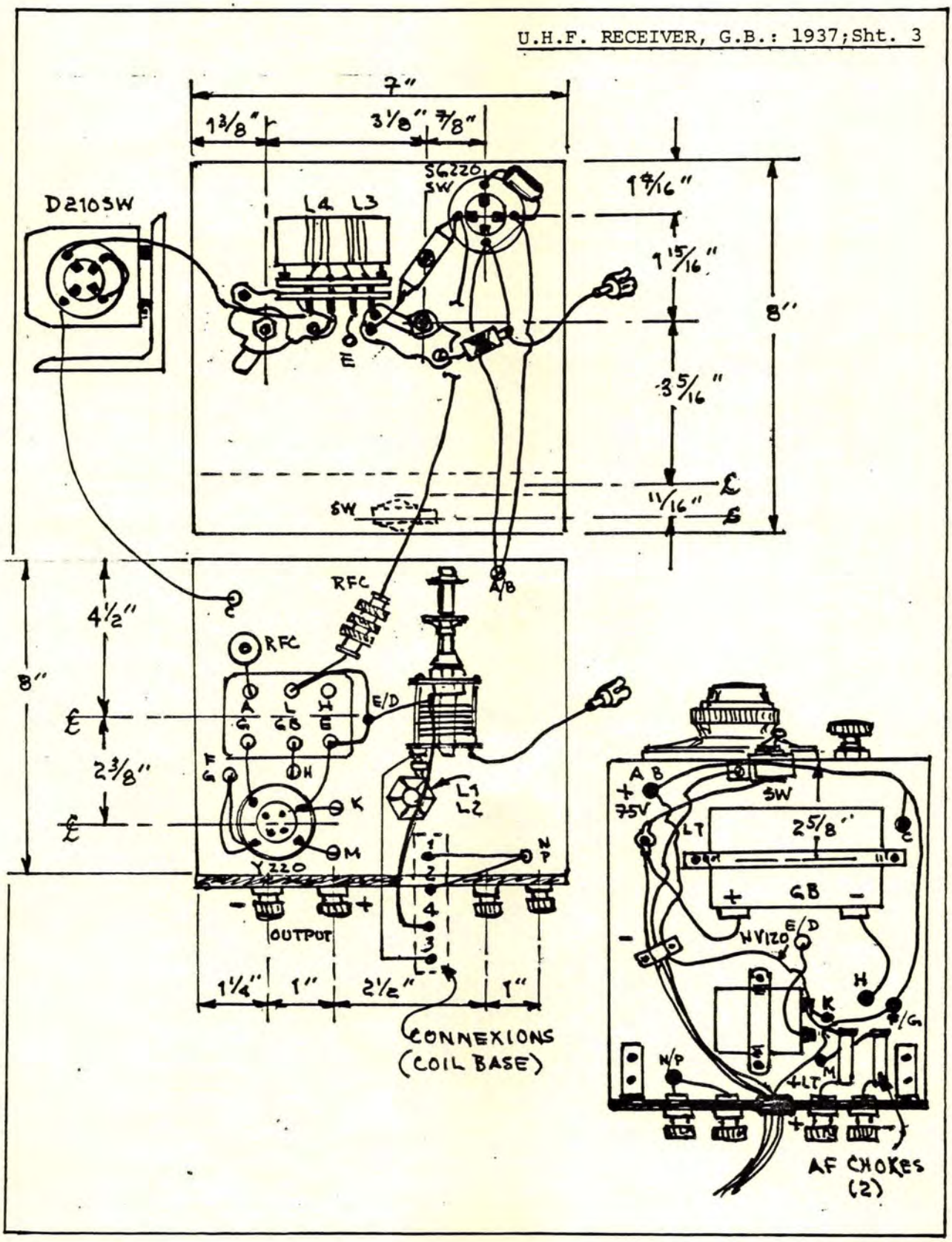

"UNIDYNE/SOLODYNE". 1927 (G.B.)

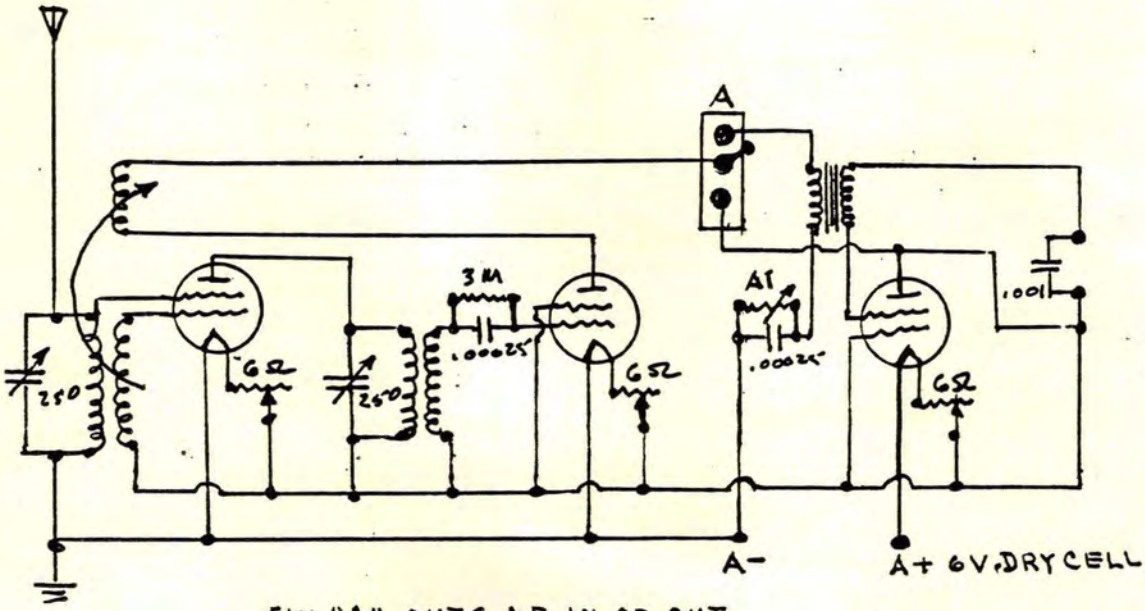

SW. "A" CUTS AF IN OR OUT.
NO "B" BATTERY EMPLOYED.

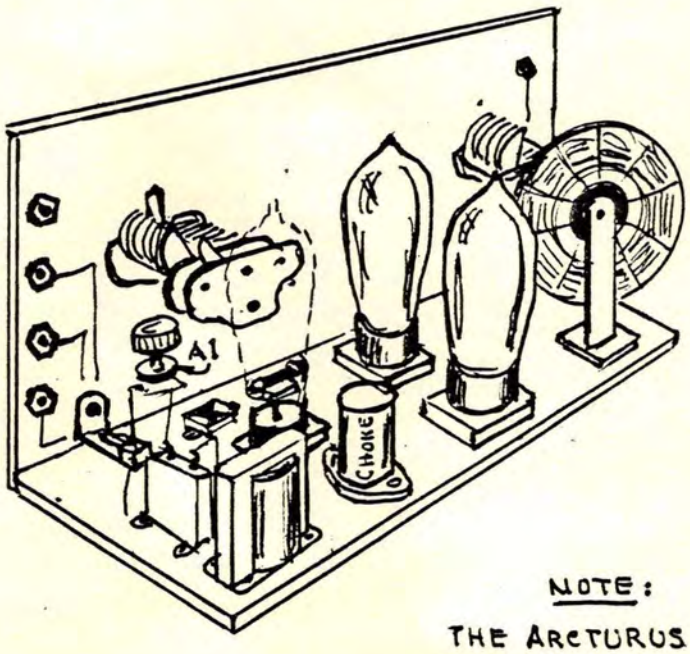

NOTE:
THE ARCTURUS 56
"SPECIAL" TUBES
MAY BE USED.

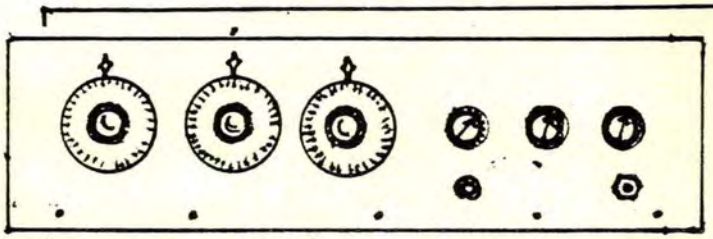

WADE-THORDARSON RECEIVER, 1926
(Sht. 1)

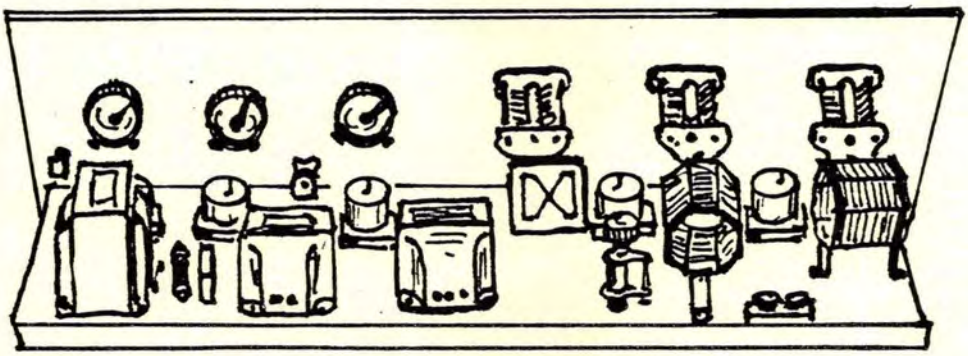

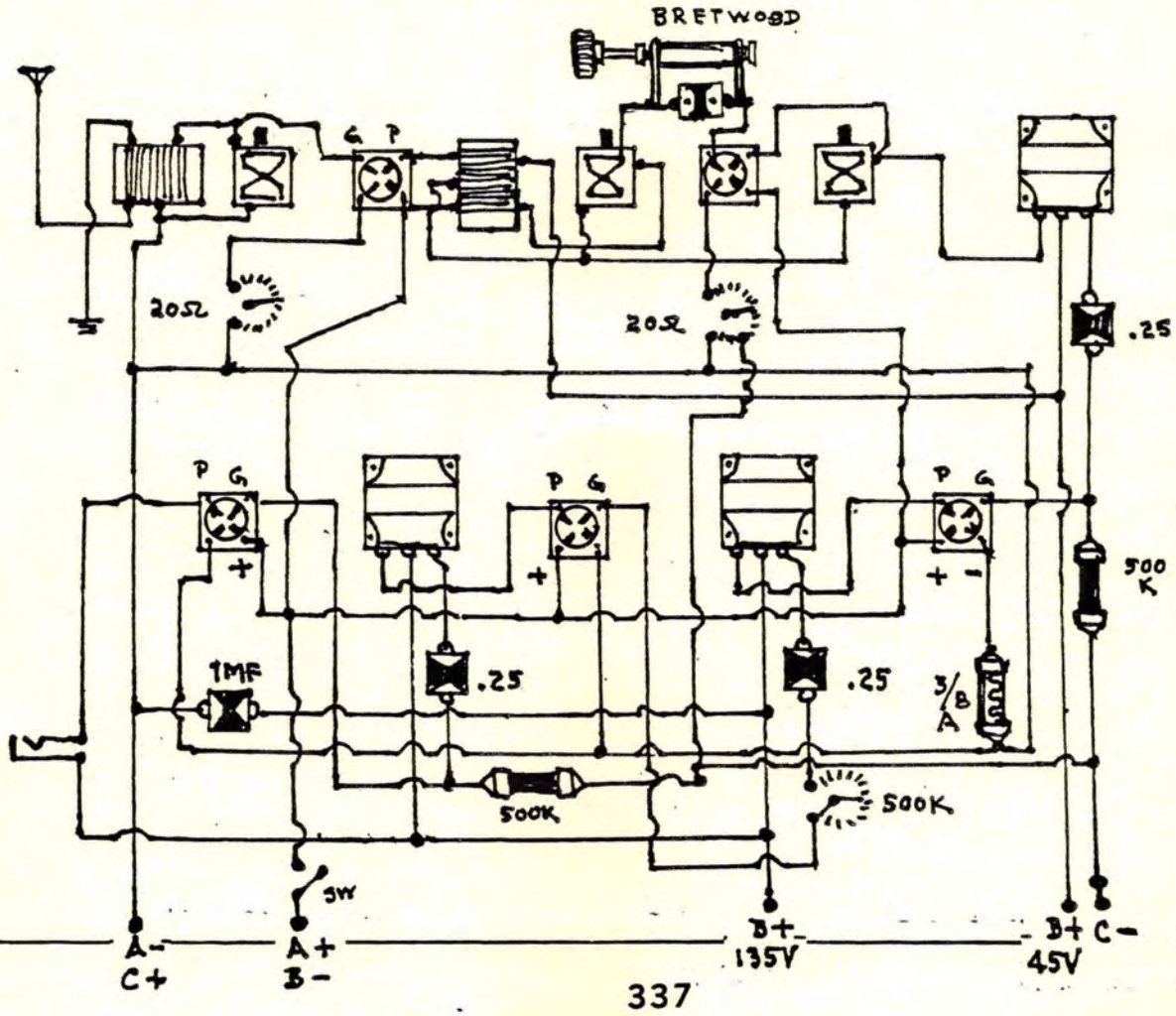

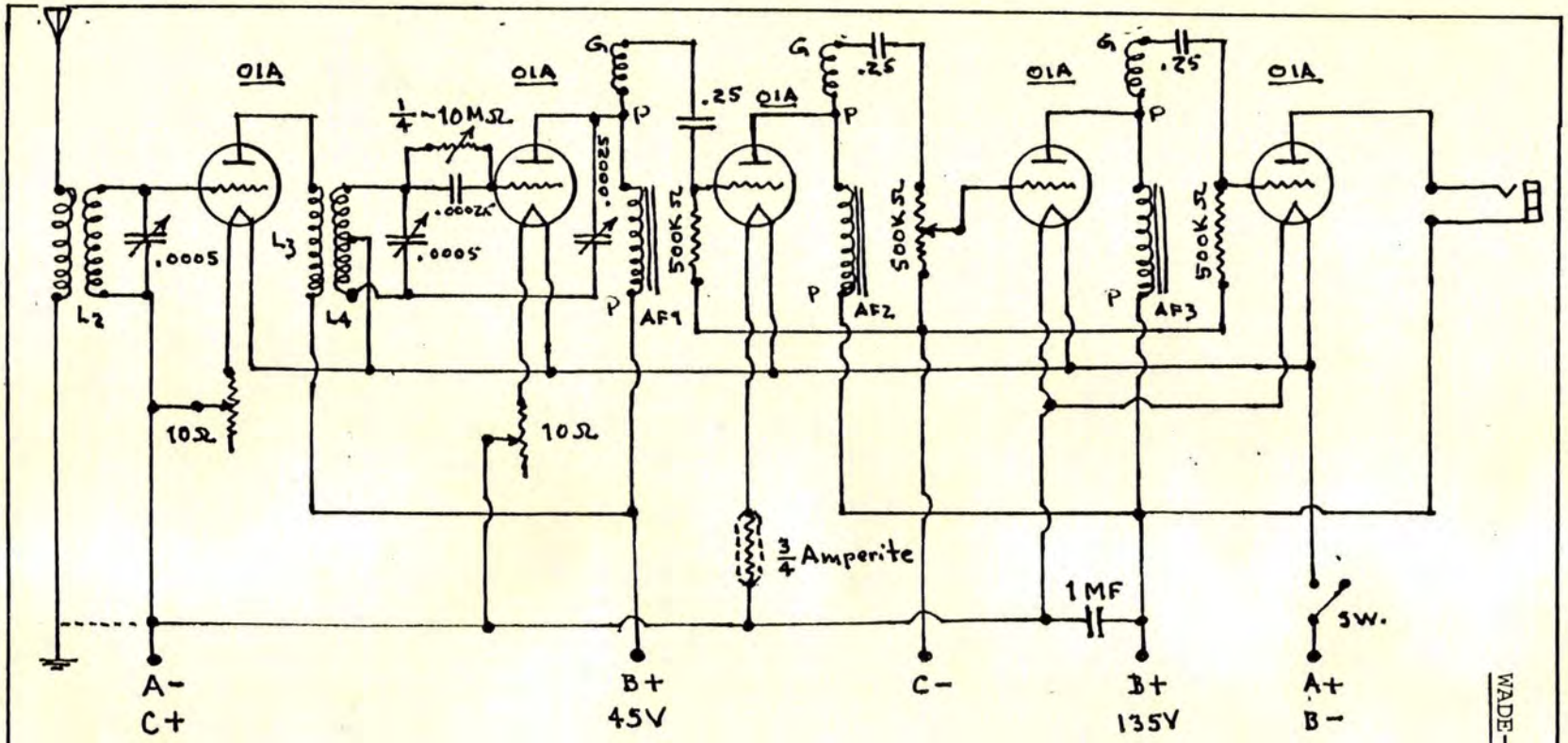

L_1 = 6 T, #22 DCC, PRI
L_2 = 60 T, #22 DCC, SEC } .250" Separation
L_3 = Same as L_1.
L_4 = Same as L_2, w/ Tap @ 14 T
Coil Forms = 3.25" ø x 4" High.

AERO COILS MAY BE USED.

PANEL = 7" x 24"
BASEBOARD = 8" x 23" x 5/8"

AF Impedances Were Samson AF units, & nos. are Samson numbers.

NOTE

SUMMIT TOROIDAL COILS MAY BE USED, w/ A- GOING TO EARTH (dotted line), & DAVEN RESISTANCE-COUPLED AF UNIT MAY BE SUBSTITUTED FOR SAMSON AF IMPEDANCES.

HARTLEY OSCILLATOR USED.

WADE-THORDARSON RECEIVER, 1926 (Sht. 2)

WALBERT "ISOFARAD" RCVR., 1926

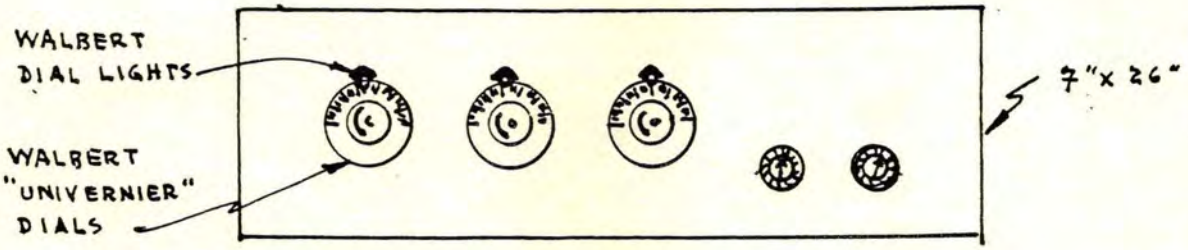

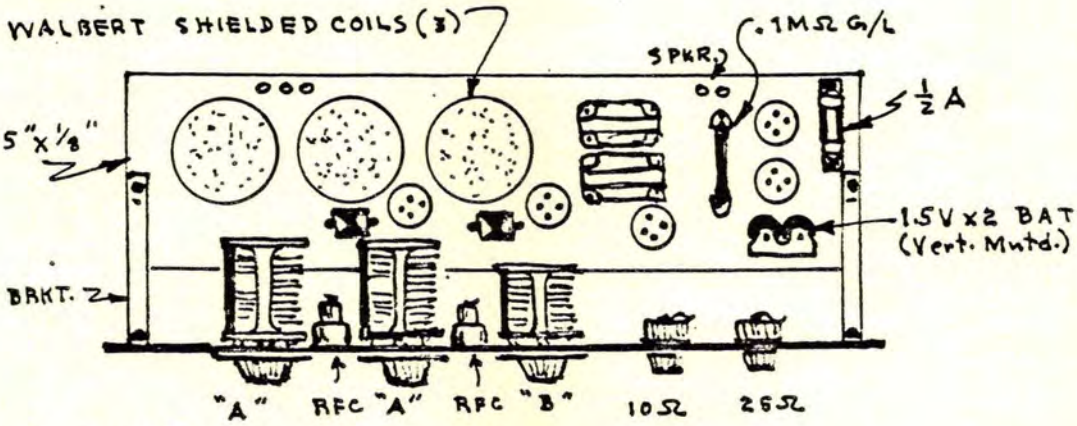

AF XFRMRS. = THORDARSON AF
& IMPEDANCE TYPE

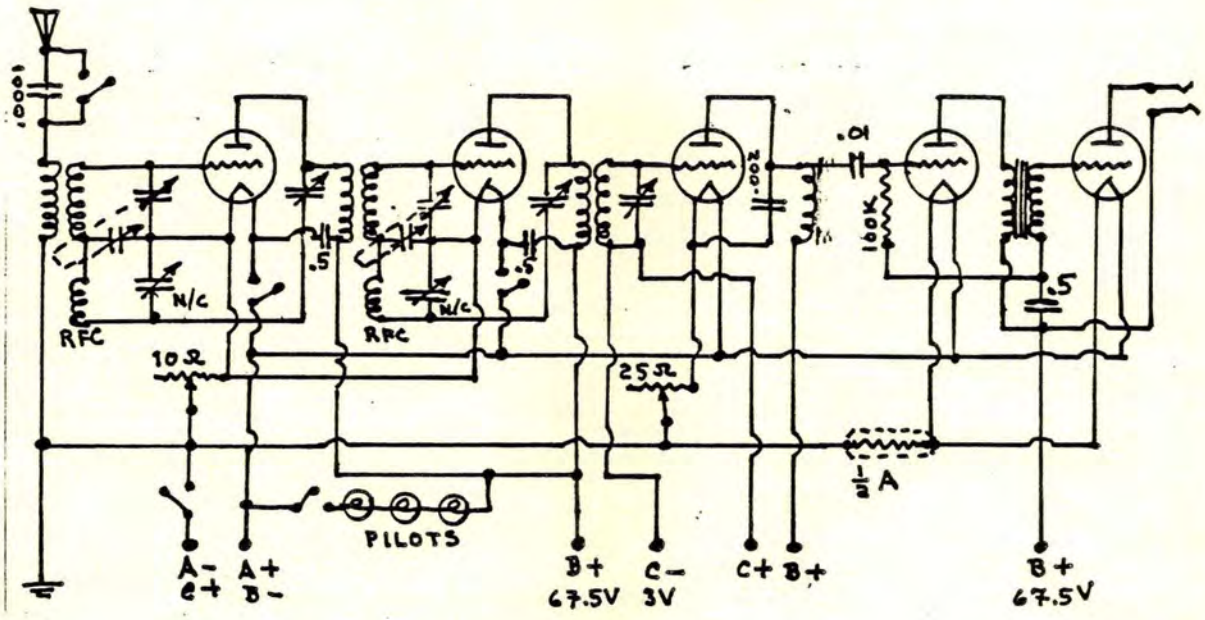

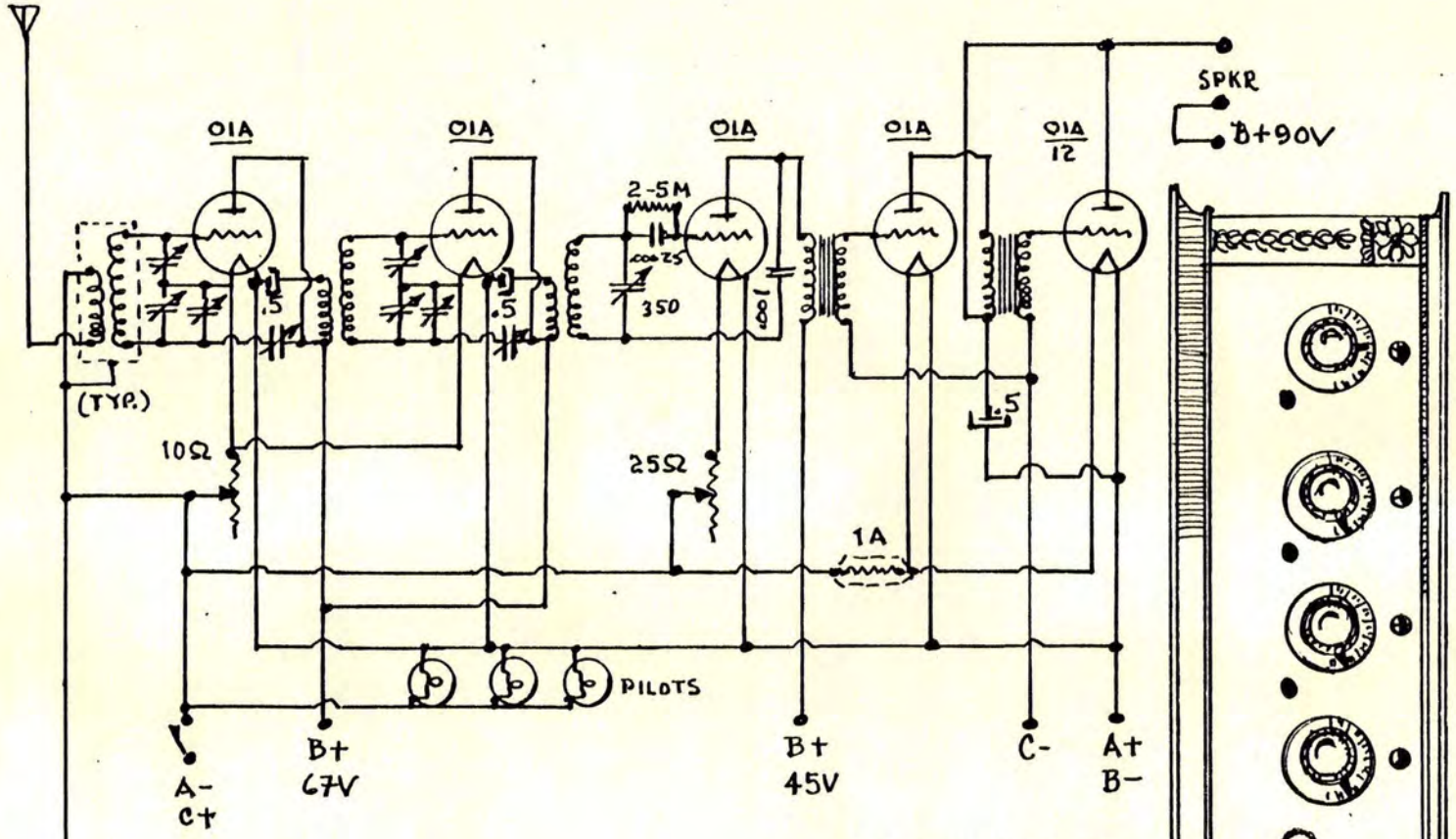

ALL COIL CANS GND'D. TO A-.

FIXED CONDENSER = DRAFTING SYMBOL OF THE PERIOD (3)

(SEE SHT. 2 FOR LAYOUT.)

NOTE: An unnessarily complicated receiver; works as well as any good TRF of the period, & could be a challenge to construct & tune.

WALBERT "ISOLODYNE", 1926; Sht. 1

WALBERT "ISOLODYNE" TRF, 1926; Sht. 2

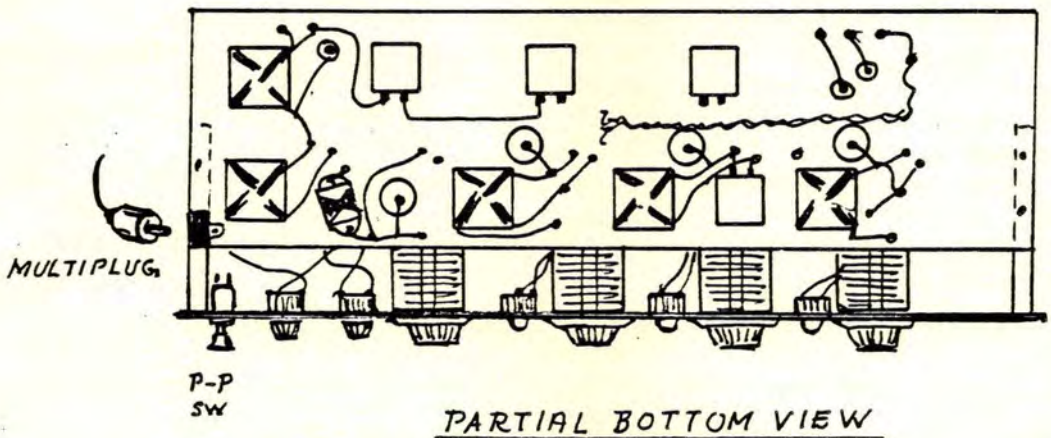

PARTIAL BOTTOM VIEW

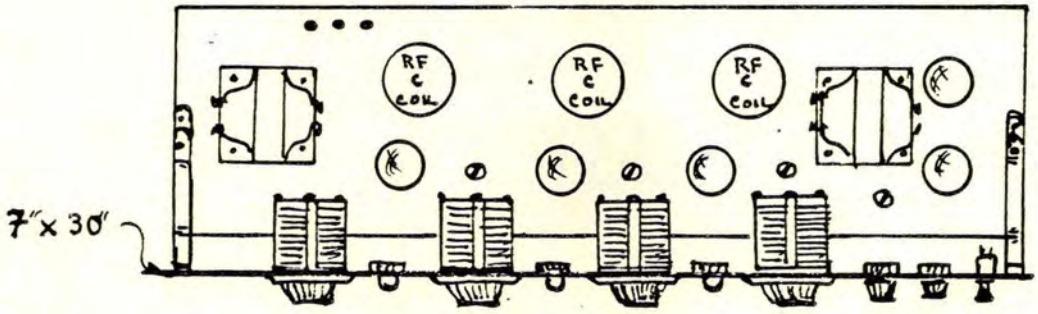

PLAN VIEW

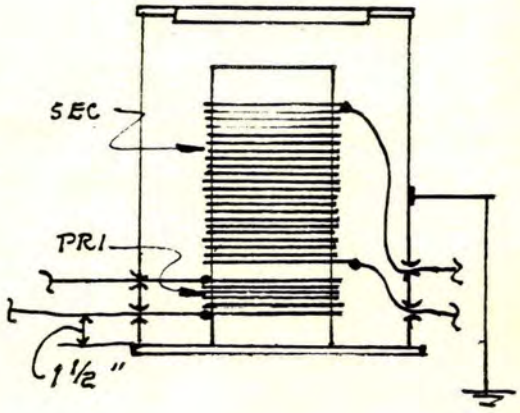

TYPICAL "ISOFARAD"
RF COIL DETAIL

1. Copper Can, Grounded.
2. 1½" clearance between Coil & can on all sides.
3. Leads feed-through are insulated from can.
4. WELTY coils similar.

(CB 6-26)

WALKER "MULTI-UNIT" (ALSO KNOWN ORIGINALLY AS "FLEXI-UNIT); 1928; Sht.1

Geo. Walker of Chicago was the prime contractor and distributor of the Victoreen radios and Victoreen components. The unit described herein was introduced in 1928, and the design remained essentially unchanged through 1930. It was a unique instrument, but its capabilities seems to have intimidated most. I have been unable to find an original "Multi-Unit", but I have constructed the basic circuit, and found that, given proper conditions, the unit will do all that Walker claimed for it. Walker also designed and marketted a dual plug-in SW coil, and later joined forces with a couple of mail-order houses. The coil and his collaborative SW receivers can be found detailed in Volume III.

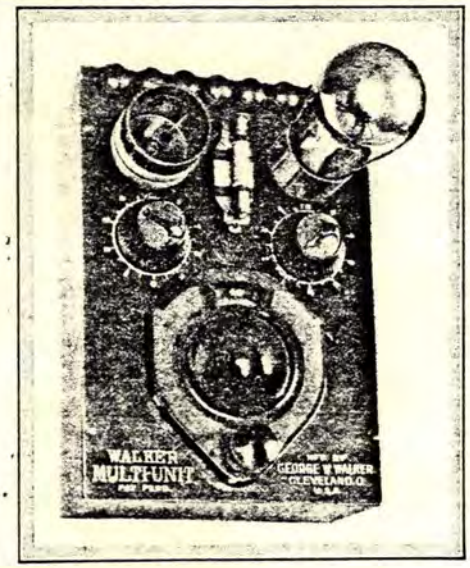

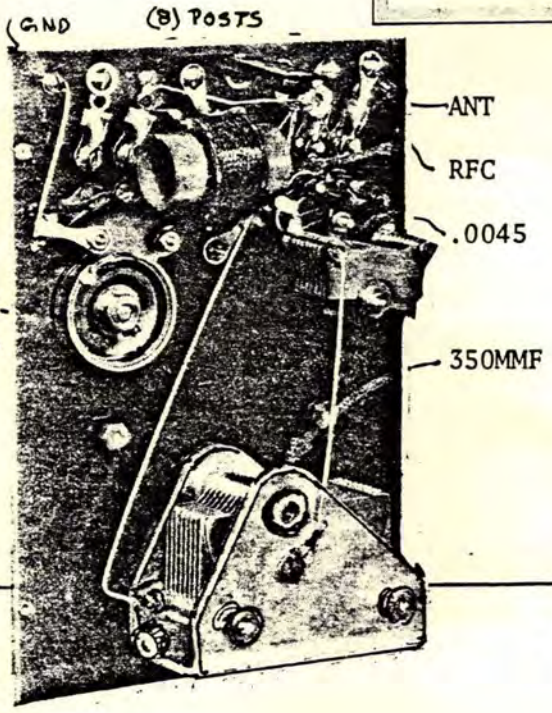

ACCESSORIES

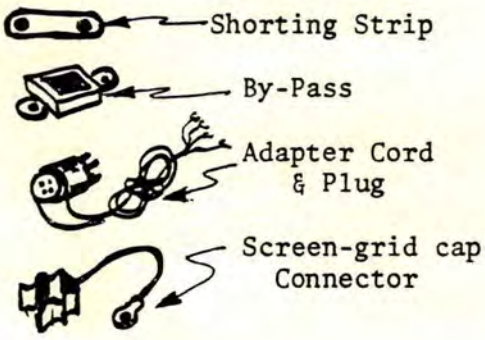

(CB 9-29)

WALKER "MULTI-UNIT" NOTES; Sht. 2

The "Flex" in the original name given this unit derived from the fact that it was flexible enough to do most anything required by the radio enthusiast. For example, the unit, all models,

Short-Wave Receiver	Short-Wave Adapter
Broadcast Receiver	Wave-Meter
Crystal Receiver	Remote Control Adapter
Screen-grid Pre Amp.	Shielded Grid SW Adapter
AF Oscillator	AC SW Adapter #2
Single Dial Converter	Wave-Trap
Extra stage of TRF	Experimental unit.

Granted, its sensitivity and selectivity were limited - that is, you could not sit in Asbury Park and expect to tune-in the BBC; but it would pull in KDKA in the SW mode.

One use not listed above was that as an unmodulated RF oscillator. The selexion of a tube was also flexible, in that you could use a 99, 01A, 12A, 22, 24A, 26, 40. All tuning was done with the unit, not the receiver. The following is a list of components:

350 MMF Variable	450 MMF Variable
100 MMF Midget	30-ohm Rheostat
7M-ohm Grid-leak	.0015/.0035 Condenser
RFC	By-Pass condenser
8 Binding posts	4-Prong socket
5-prong socket	Adapter cable

The original unit measured 5" x 7" x 3", cast aluminum base with a shielded Bakelite panel. An attractive unit, similar in its visual appeal as the Electrad "Truvolt" divider, q.v.

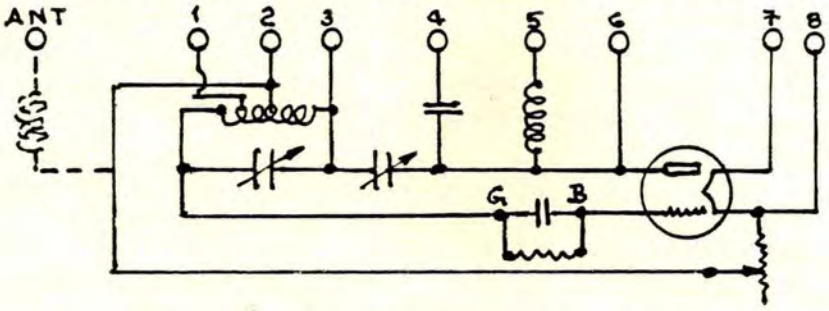

THE FUNDAMENTAL ELECTRIC CIRCUIT

WALKER "MULTI-UNIT" NOTES; Sht. 3

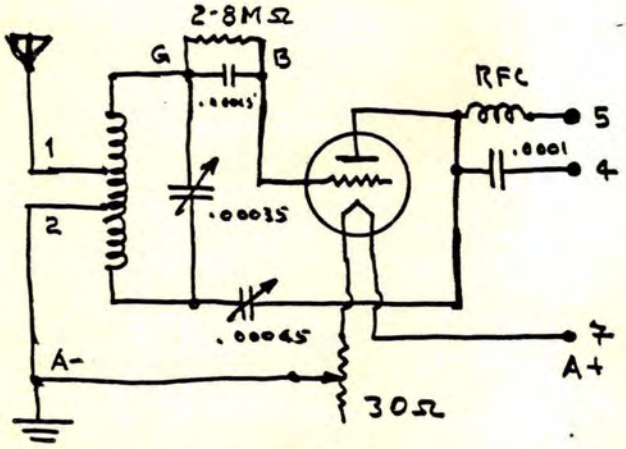

EXTRA STAGE OF T.R.F.

When used with sets having 99 tubes, set FIL at 3; with 6V tubes, FIL (TRIM) fully CW.

(Numbers refer to binding posts.)

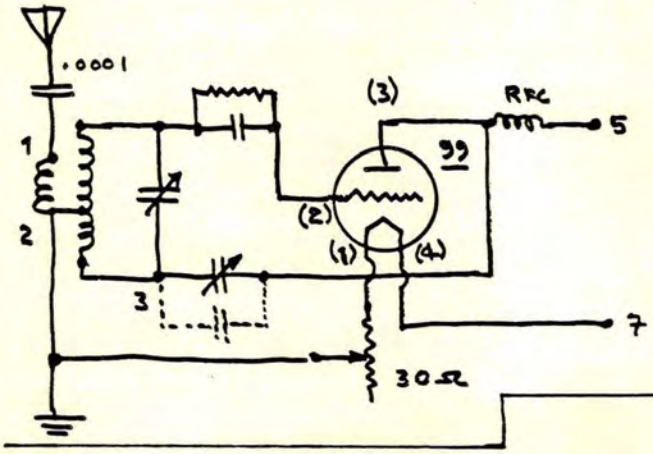

SW. ADAPTER, BATTERY SETS

Tuning is very sharp.

FIL at 3 with a 4.5V filament supply.

Numbers around tube are for the base of a 99 tube.

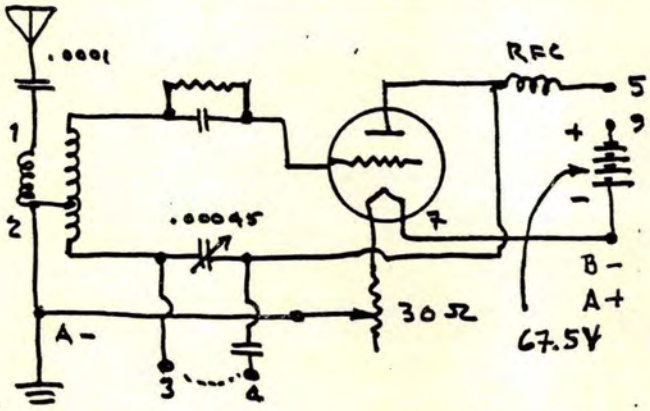

SINGLE TUBE RECEIVER NO. 1

45V battery may be used, depending on the tube employed.

RFC and .0001 capacitor may be omitted with a 45V battery, and 3 and 4 deleted.

Dotted line is shorting link.

WALKER "MULTI-UNIT" APPLICATIONS
(Sht. 4)

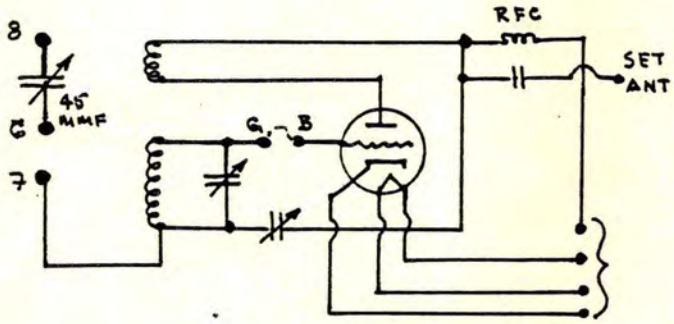

AC PRE-AMPLIFIER

Remove G/L & short terminals "G" & "B".

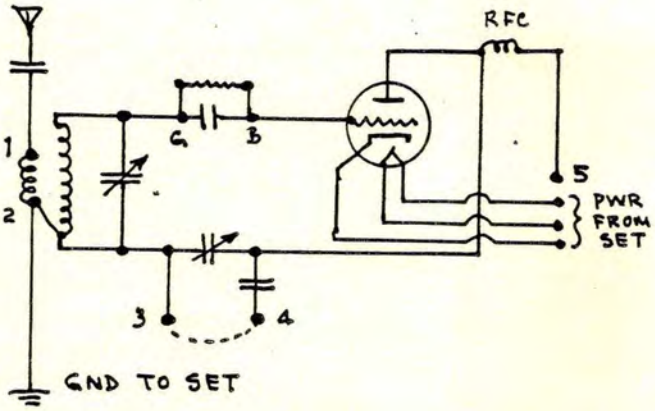

SW ADAPTER, AC SETS

Set FIL (TRIM) at 0. If set ANT is not inductive, ground unit through the set.

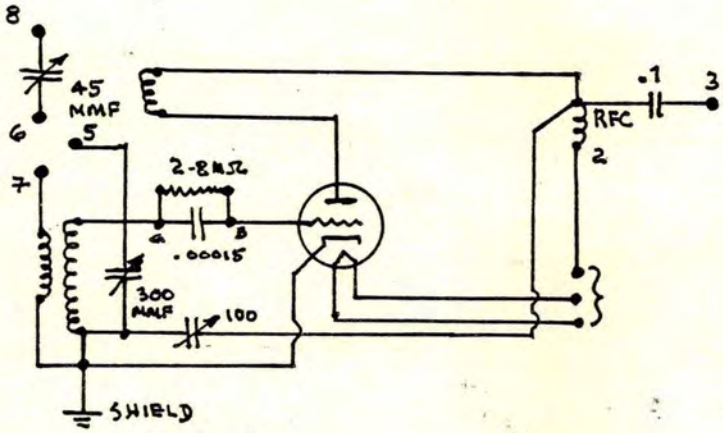

SW ADAPTER, LATE

15-200 Meters.
5-Prong coil socket.
Use rcvr. AF system.
Cast aluminum shield cover for unit used originally (1929).

(CB 9·30)

WALKER "MILTI-UNIT" APPLICATIONS: Sht. 5

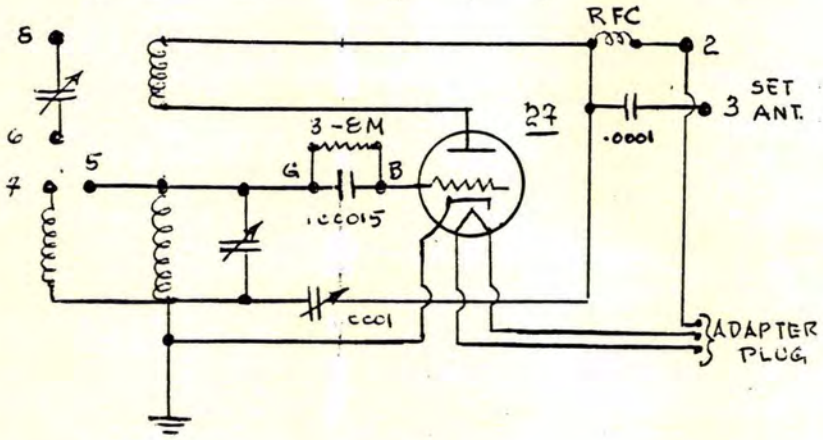

AC SW ADAPTER, #2

15-200 Meters.

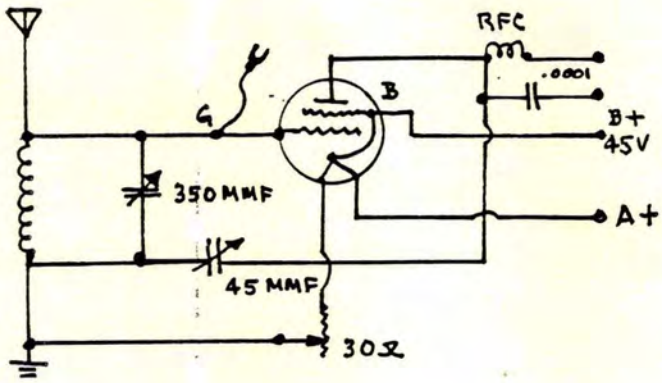

SCREEN-GRID AF AMP.

Remove G/L.
Remove 1st RF tube from set & insert plug
GND remains on set.
FIL @ 3V; VOL @ 4.
22 Tube may be used.

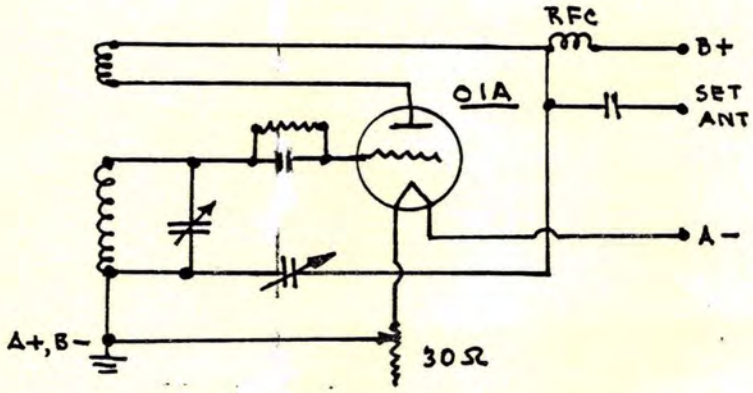

AC RF & AUDIO OSCILLATOR

Battery may be incorporated.
99 or 01A tubes.
15-550 Meters.

SUPER-ZENITH RECEIVER, 1926

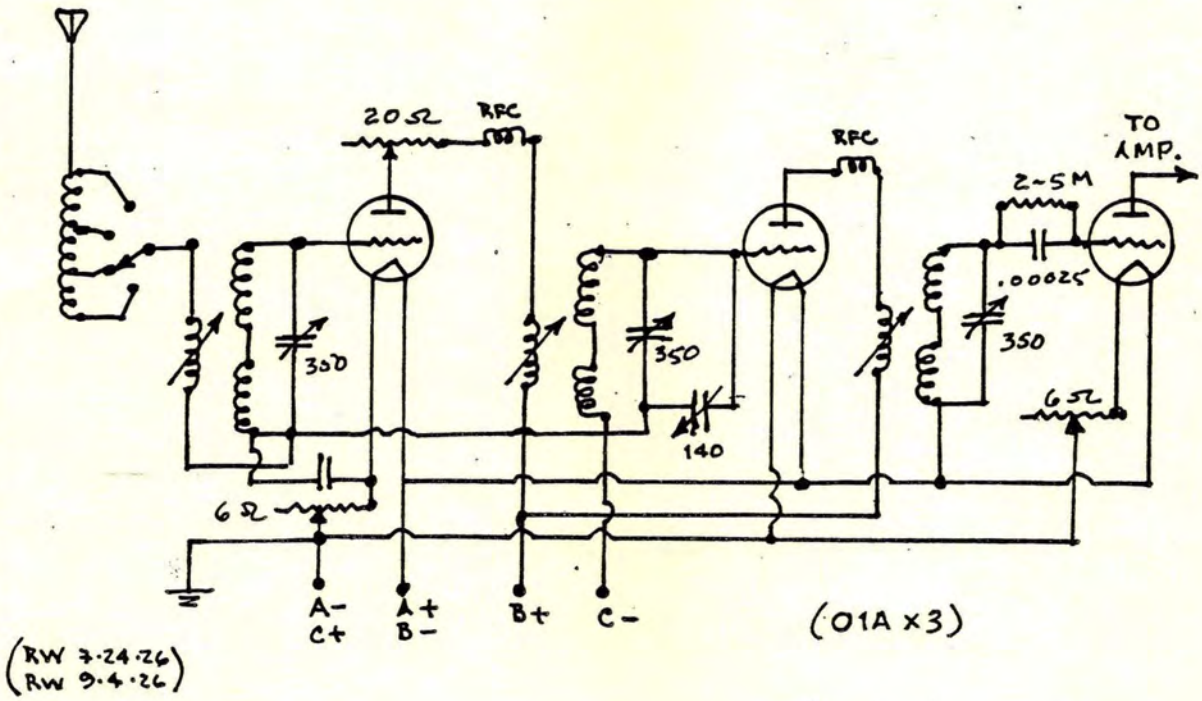

Beyond Rider!

SEE BACK COVER

As ancillary adjuncts to this work by D.H.MOORE, refer to the listings over leaf for other works. For additional information and prices, send a self-addressed, stamped envelope to the publishers, or to either of the addresses below. An immediate reply will be forthcoming.

Olde Tyme Radio Co.

2445 LYTTONSVILLE RD.

SILVER SPRING, MD.-20910

(301) 585-8776

ANTIQUE ELECTRONIC SUPPLY

688 W. First St. • Tempe, AZ 85281 • U.S.A. • (602) 894-9503

OTHER PUBLICATIONS AVAILABLE

THE VINTAGE RADIO IDENTIFICATION SKETCH-BOOKS of D.H.MOORE:

Vol. I - *Introductory Essays*
" IIA - *Broadcast Receivers, A-L*
" IIB - *Broadcast Receivers, M-Z*
" III - *Short-Wave Receivers*
" IV - *Power Supplies & Amplifiers*
" V - *Hardware & Accessories*
" VI - *Early Test Equipment*
" VII - *General Technical Data*
" VIII - *The Early Years: 1910-1925*
Vol. IX - *Supplemental Data Sheets*

MONOGRAPHS ON SELECTED MARQUES:

PILOT	*VICTOREEN*	*ULTRADYNE*
SARGENT-RAYMENT	*REMLER/BEST*	*STROBODYNE*
BREMER-TULLY	*SCOTT (Early)*	*NATIONAL/HAMMARLUND*
BROWNING-DRAKE	*INFRADYNE*	*DOERLE*

Other MONOGRAPHS are in preparation and will be announced.

COPIES of ORIGINAL CONSTRUCTION BLUE-PRINTS:

ULTRADYNE L-2	VICTOREEN "Standard" & "Universal"	
"TROPODYNE"	BEST's 115 KC.	B-T "Counterphase Four"
SARGENT Pre-Selector & SW.Rcvr.		B-T "Counterphase Six"

A PICTORIAL DIGEST OF SELECTED VINTAGE RADIOS:

The Editorial Group, Ltd.

D. H. MOORE, A.D.I.
DIRECTOR

"Specialists In Technical Documentations"

P.O. BOX 521
PALO ALTO, CALIF.
94302